CODE ORDINANCE

Sponsored by: Borough Manager
Introduced: 08/18/20
Public Hearing: 09/01/20
Public Hearing Continued to 09/15/20: 09/01/20
Public Hearing: 09/15/20
Amended: 09/15/20
Adopted: 09/15/20

MATANUSKA-SUSITNA BOROUGH
ORDINANCE SERIAL NO. 20-016

AN ORDINANCE OF THE MATANUSKA-SUSITNA BOROUGH ASSEMBLY ADOPTING MSB 11.12, DRIVEWAY STANDARDS IN ORDER TO ENSURE DRIVEWAYS WITHIN BOROUGH RIGHTS-OF-WAY MINIMIZE NEGATIVE IMPACT TO DRAINAGE, MAINTENANCE, AND SAFETY OF THE TRAVELING PUBLIC.

BE IT ENACTED:

Section 1. Classification. This ordinance is of a general and permanent nature and shall become a part of the Borough Code.

Section 2. Adoption of chapter. MSB 11.12 is hereby adopted to read as follows:

11.12.010 INTENT

11.12.020 DEFINITIONS

11.12.030 APPLICABILITY

11.12.040 APPLICATION PROCEDURES

11.12.050 GENERAL STANDARDS

11.12.060 LOW VOLUME DRIVEWAY STANDARDS

11.12.070 HIGH VOLUME DRIVEWAY STANDARDS

11.12.080 TRAFFIC IMPACT ANALYSIS

11.12.090 TRAFFIC IMPACT MITIGATION

11.12.100 WAIVER OF STANDARDS

11.12.110 NONCONFORMING DRIVEWAYS

11.12.120 VIOLATIONS, ENFORCEMENTS, AND PENALTIES

11.12.010 INTENT

(A) This chapter is intended to establish a permit process and standards for driveways within Borough rights-of-way. Minimum standards are provided for proper placement and design of driveways in order to ensure drainage, maintenance, movement and safety of the traveling public.

(B) All driveways are considered encroachments under MSB 11.10 and are subject to the requirements therein.

(C) Issuance of a permit under this chapter grants the permittee no right, title, or interest within Borough rights-of-way. The Borough reserves the right to deny, modify, or revoke any permit issued under this chapter.

11.12.020 DEFINITIONS

(A) For the purpose of this chapter, the following definitions shall apply unless the context clearly indicates or requires a different meaning.

"Corner clearance" means the distance between an intersection and driveway, not including tapers or curve returns.

"Curb cut" means a ramp built into a curb to allow the driveway to ramp down from the curb height to the pavement surface.

"Curve return" means the curve located at the end of a driveway connecting the driveway edge to the roadway edge.

"Design vehicle" means the largest type of vehicle that frequently accesses the roadway from a driveway.

"Design year" means the year that is 10 years after the anticipated opening date of a development.

"Driveway" means a type of encroachment, as defined by MSB 11.10.010(A), that provides access to Borough rights-of-way or easements.

"Driveway width" means the distance across the driveway at the furthest point of curvature from the roadway, typically within the right-of-way, measured at right angles to the centerline of the driveway surface.

"Edge clearance" means the distance measured from the property corner to the near edge of the driveway surface at the right-of-way line, not including curve returns.

"Functional area" means the physical area of an intersection and the area extending both upstream and

downstream which includes perception-reaction distance, maneuver distance, and storage length.

"High volume driveway" means a driveway which accesses a parcel containing uses which generate more than 10 vehicles during the peak hour.

"Level of Service (LOS)" means a qualitative measure describing operational conditions within a traffic stream, based on service measures such as speed and travel time, freedom to maneuver, traffic interruptions, comfort, and convenience. Six LOS, from A to F, are used to represent a range of operating conditions with LOS A representing the best operating conditions and F the worst.

"LOS A" means vehicles are almost completely unimpeded in their ability to maneuver within the traffic stream, passing demand is well below passing capacity, drivers are delayed no more than 30 percent of the time by slow moving vehicles.

"LOS B" means the ability to maneuver a vehicle is only slightly restricted; passing demand approximately equals passing capacity, and drivers are delayed up to 45 percent of the time; the level of physical and psychological comfort provided to drivers is still high.

"LOS C" means the ability to maneuver a vehicle is noticeably restricted and lane changes require more care and vigilance on the part of the driver; percent time delays are up to 60 percent; traffic will begin to back-up behind slow moving vehicles.

"LOS D" means the level at which speeds begin to decline with increasing traffic flow, density begins to increase somewhat more quickly, passing demand is very high while passing capacity approaches zero, and the driver experiences reduced physical and psychological comfort levels; the percentage of time motorists are delayed approaches 75 percent, even minor incidents can be expected to back-up traffic because the traffic stream has little space to absorb disruptions.

"LOS E" means the roadway is at capacity; the percentage of time delay is greater than 75 percent, passing is virtually impossible, as there are virtually no usable gaps in the traffic stream; vehicles are closely spaced, leaving little room to maneuver, physical and psychological comfort afforded to the driver is poor.

"LOS F" means that traffic is heavily congested with traffic demand exceeds traffic capacity, there is a breakdown in vehicular flow, and vehicle delay is high.

"Lot" means the least fractional part of subdivided lands having limited fixed boundaries and having an assigned number, or other name through which it may be identified.

"Low volume driveway" means a driveway which accesses a parcel containing uses which generate less than or equal to 10 vehicles during the peak hour.

"Opening date" means the anticipated date at which the development will generate more than 100 vehicles during the peak hour. For developments that will generate more than 250 vehicles during the peak hour, the opening date means the anticipated date at which the development will generate more than 250 vehicles during the peak hour.

"Parcel" means a lot or contiguous group of lots in single ownership or under single control, usually considered a unit for purposes of development.

"Passenger vehicle" means a vehicle falling under classes 1 through 3 of the Federal Highway Administration vehicle classification definitions.

"Peak hour" means a one-hour period representing the highest hourly volume of vehicle trips generated by the development.

"Qualified professional" means a professional civil engineer or other professional registered with the State of Alaska under Alaska Statute 08.48 qualified to practice the type of work required by this chapter.

"Roadway" means the portion of a road that includes driving lanes and shoulders.

"Roadway Classification" means the type of roadway or right-of-way as determined by the Public Works Director, based on current constructed roadway standard, current functional classification of the road, and the intended functional classification in accordance with the most current MSB Long Range Transportation Plan and MSB Official Streets and Highways Plan. Types of roadway classification include local, collector, and arterial.

"Single-unit truck" means a vehicle falling under classes 4 through 7 of the Federal Highway Administration vehicle classification definitions.

"Traffic Impact Analysis" means a specialized engineering study performed by a qualified professional civil engineer which determines the degree or extent to which proposed land use developments, and the traffic they are expected to generate, will affect the adjacent or surrounding transportation system.

"Vehicle trip" means a single or one-direction vehicle movement exiting or entering a development.

(B) The following diagrams are a visual representation of terms used within this chapter:

(1) Plan view of a driveway:

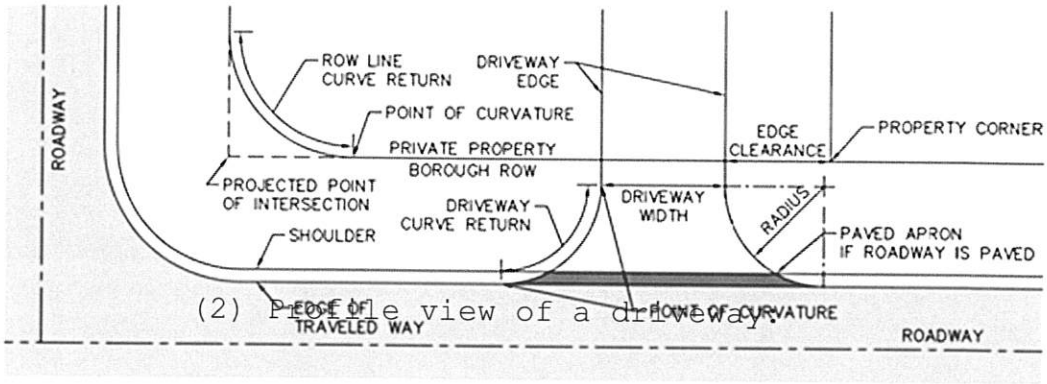

(2) Profile view of a driveway:

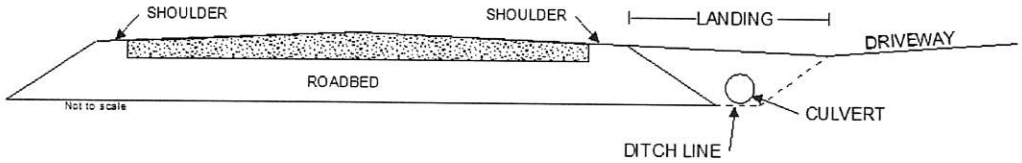

(C) In instances where a word is not included in this section nor in the applicable section, reference will be made first to MSB 17.125, followed by the most recent publication of "The Illustrated Book of Development Definitions" then to "The Zoning Dictionary" by Lehman and Associates, then to "Webster's New Universal, Unabridged Dictionary."

11.12.030 APPLICABILITY

(A) The following require a driveway permit from the Borough:

(1) Existing, unpermitted driveways;

(2) Construction of new driveways;

(3) Physical modifications to existing driveways; or

(4) Change in land use requiring a different standard from that which the driveway permit was issued.

(B) A permit is not required for driveways constructed or reconstructed by Borough or state projects.

(1) Any physical modification thereafter requires a permit under this chapter.

11.12.040 APPLICATION PROCEDURES

(A) An application for a driveway permit may be initiated by a property owner or the owners' authorized agent. An application for a driveway permit shall be filed on a form provided by the Borough.

(1) The application for a driveway permit shall be accompanied by an appropriate filing fee as established by the assembly, payable to the Borough.

(2) All driveway application shall include the following items:

(a) street being accessed;

(b) driveway dimensions;

(c) pathway or sidewalk dimensions, if applicable;

(d) culvert type, diameter, and length, if applicable;

(e) expected completion date;

(f) driveway surface type;

(g) proposed land use;

(h) estimated peak hour and average daily traffic generated by the use;

(i) Residential developments can assume a vehicle trip generation rate of 1 peak hour vehicle trip per dwelling unit,

(ii) Other developments shall use the most recent edition of the Institute of Transportation Engineers Trip Generation Manual, and

(iii) Local vehicle trip generation rates, accompanied by supporting data and calculations, determined by a professional civil engineer registered by the State of Alaska may be used as a substitute for the Institute of Transportation Engineers Trip Generation Manual.

(3) In addition to items within paragraph (2) of this subsection, driveway applications for high volume driveway and low volume driveways required to be

designed by a qualified professional shall include the following items:

(a) design vehicle;

(b) driveway sight triangles for driveways that access a parcel containing uses which generate more than 10 vehicles per hour (VPH) during the peak hour; and

(c) driveway plan and profile, containing sufficient information to demonstrate that all the applicable standards of this chapter are met, prepared and stamped by a qualified professional.

(4) In addition to items within paragraph (2) - (3) of this subsection, driveway applications for uses generating more than 50 vehicles during the peak hour shall submit a turn lane warrant analysis prepared by a professional civil engineer registered by the State of Alaska.

(5) In addition to items within paragraphs (2)-(4) of this subsection, driveway applications for uses generating more than 100 vehicles during the peak hour shall submit a traffic impact analysis prepared and stamped by a professional civil engineer registered by the State of Alaska.

(B) Following review of the application, the Borough will grant approval to construct or deny the proposed driveway based on whether or not it meets the standards of this chapter.

(C) Upon approval to construct, the applicant may construct the driveway as approved and shall notify the Borough upon completion.

(D) Upon notification that construction of the driveway is complete, the Borough will issue final approval of the driveway if the Borough finds that it meets the requirements of this chapter.

11.12.050 GENERAL STANDARDS

(A) The standards within this subsection apply to all driveways regardless of land use.

(1) Driveways shall not cause adverse drainage onto the roadway.

(2) The landowner shall be responsible for maintenance of the driveway, including but not limited to culvert cleaning and thawing to ensure proper drainage.

(a) Snow removed from the driveway shall not:

(i) be placed in, or pushed across the roadway;

(ii) obstruct traffic signage or address numbers;

(iii) obstruct sight triangles; or

(iv) be placed in the right-of-way in a manner that interferes with drainage or normal maintenance activities.

(3) Driveways shall be installed with a landing having a negative 2 percent slope away from the road to the extent feasible.

(a) Where a negative slope away from the roadway is not feasible due to topographical constraints, the driveway shall be constructed in a manner that prevents water from flowing onto the roadway.

(4) Length of the driveway landing, as measured from the outside edge of the road shoulder, shall be a minimum of 10 feet.

(a) When the design vehicle is single-unit truck or larger, the borough may require a longer landing, up to 30 feet, to allow larger vehicles to come to a complete stop before entering the roadway.

(5) The first 10 feet of the driveway landing shall be installed perpendicular to the roadway to the extent feasible. A driveway may intersect the roadway

at an angle no less than 60 degrees, upon approval by the Borough, if required by topographical or physical constraints.

(6) Any fill or cut slopes created within the right-of-way that are steeper than 2H:1V are not allowed unless designed by a professional civil engineer registered by the state of Alaska.

(7) Unless otherwise specified, driveways shall be installed with a minimum 16-gauge thickness, 12-inch diameter, corrugated metal pipe.

(a) If the Borough determines that a 12-inch culvert is likely insufficient to accommodate drainage, the Borough may require a larger culvert and may also require an engineering analysis to determine the size of the culvert needed to adequately handle flow from events that have a 10% chance of occurring in any given year.

(b) If the driveway crosses a stream reach which harbors fish, as determined by the Alaska Department of Fish and Game, then the culvert shall be installed in accordance with the fish passage culvert section of the MSB subdivision construction manual.

(c) The Borough may waive the requirement for a culvert if the Borough determines one is not needed to accommodate drainage.

(8) Culverts shall be installed as follows:

(a) at least one foot of culvert shall be visible at the toe of the foreslopes on each side of the driveway or with sloped end sections flush with the foreslopes;

(b) culverts shall be sloped to match the ditch gradient at a minimum of 0.5 percent in the direction of flow; and

(c) culverts shall be placed in the existing ditch line or the ditch line can be modified such that the culvert is set back up to 6 feet, as long as the ditch remains entirely within the right-of-way.

(9) Driveways shall be installed and maintained to provide the required sight distance triangles as follows:

(a) The entire area of the sight triangles shown in the below figure shall be designed to provide a largely unobstructed view from point A at 3.5 feet above the roadway to all points 3.5 feet above the

roadway along the lane centerlines from point B to point C and point D to point E:

(b) The standard sight distances listed in the following table are for vehicles turning onto a two-lane undivided street. For other conditions, the standard

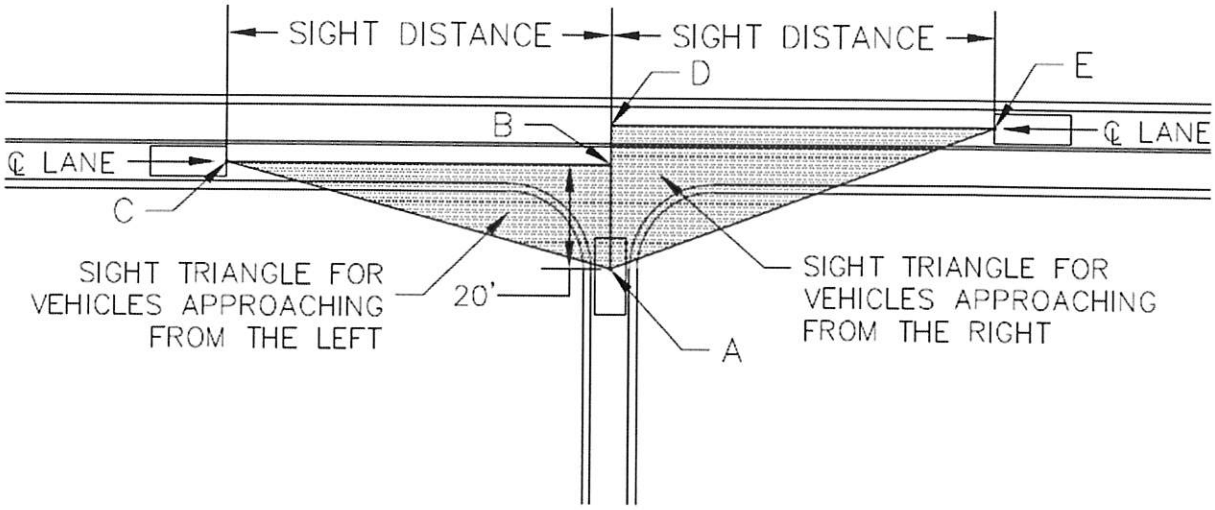

sight distance should be calculated using Section 9.5 of the 7th edition of *A Policy on Geometric Design of Highways and Streets* (American Association of State Highway Transportation Officials).

Standard Driveway Sight Distance (feet)									
Sight triangle	Design Vehicle	Speed limit (mph)							
		20	25	30	35	40	45	50	55
Left (B to C)	Passenger vehicle	225	280	335	390	445	500	555	610
	Single-unit truck	280	350	420	490	560	630	700	770
	Combination truck	340	425	510	595	680	765	850	930
Right (D to E)	Passenger vehicle	195	240	290	335	385	430	480	530
	Single-unit truck	250	315	375	440	500	565	625	690
	Combination truck	310	390	465	545	620	695	775	850

(c) Minimum sight distance in the following table shall only be used when standard sight distance cannot be obtained because of topographical or other physical constraints outside of the applicant's control:

Minimum Sight Distance (feet)								
Average grade of sight distance triangle	Speed limit (mph)							
	20	25	30	35	40	45	50	55
-10%	130	180	235	295	365	440	525	610
-9%	130	175	230	290	355	430	510	595
-8%	125	170	225	285	350	420	495	580
-7%	125	170	220	280	340	410	485	570
-6%	120	165	215	275	335	400	475	555
-5%	120	165	215	270	330	395	465	545
-4%	120	160	210	265	325	385	455	530
-3%	120	160	205	260	315	380	450	520
-2%	115	160	205	255	310	375	440	510
-1%	115	155	200	250	305	370	435	505
0%	115	155	200	250	305	360	425	495
1%	115	155	195	245	300	355	420	485
2%	110	150	195	240	295	350	415	480
3%	110	150	190	240	290	345	405	470
4%	110	150	190	235	285	340	400	465
5%	110	145	190	235	285	340	395	460
6%	110	145	185	230	280	335	390	450
7%	110	145	185	230	275	330	385	445
8%	105	145	185	225	275	325	380	440
9%	105	140	180	225	270	320	375	435
10%	105	140	180	220	270	320	370	430

(d) If minimum sight distance in the previous table cannot be obtained because of topographical or other physical constraints outside of the applicant's control, alternate mitigation such as hidden driveway or advisory speed signs shall be installed in accordance with the *2016 Alaska Traffic Manual* (Alaska Department of Transportation & Public Facilities).

(10) The cost of redesign and construction of public infrastructure and utilities impacted by the driveway installation shall be the responsibility of the permittee.

(11) The minimum corner clearance for a driveway to a corner lot shall be 60 feet from the projected point of intersection or property corner, as measured from the driveway edge.

(a) In no case shall a driveway be located within the curve return of a constructed roadway or right-of-way.

(12) Edge clearance shall be equal to or greater than the radius of the driveway curve return.

(a) Edge clearance for flag lots with flag poles less than or equal to 40 feet wide shall have a minimum edge clearance of 5 feet.

(b) Edge clearance does not apply to common use driveways serving two adjoining properties.

(13) Adjacent driveway curve returns shall not overlap.

(14) Curb cuts shall be installed in accordance with the February 2019 *Alaska Standard Plan I-20.20* (Alaska Department of Transportation & Public Facilities).

(15) All pedestrian walkway crossings shall conform to *2006 Americans with Disabilities Act Standards for Transportation* (US Department of Transportation) and the *2016 Alaska Traffic Manual* (Alaska Department of Transportation & Public Facilities).

11.12.060 LOW VOLUME DRIVEWAY STANDARDS

(A) This section applies to driveways that access a parcel containing uses which generate less than or equal to 10 vehicles during the peak hour.

(1) Driveway Dimensions.

(a) Driveway width shall be a minimum of 10 feet and a maximum of 25 feet.

(b) The radius of the driveway curve return shall be a minimum of 6 feet and a maximum of 20 feet.

(c) Driveways with dimensions that fall outside the standards of (a) - (b) of this paragraph shall be designed by a qualified professional and shall be designed to ensure:

(i) the driveway is the minimum width necessary to accommodate the proposed use;

(ii) snow storage equal to or greater than the driveway width at the edge of the

roadway is available within the right-of-way, in the direction of anticipated snow removal, fronting the property to the extent feasible;

(iii) vehicles turning into or out of the driveway do not encroach into the opposing lane on collector or higher classification roads; and

(iv) the driveway meets all other standards within this chapter.

(2) Driveways to corner lots or lots that border two or more roadways shall gain access from the right-of-way of lowest classification when rights-of-way of multiple classifications bound a lot.

(3) Driveways fronting on paved roadway surfaces shall have a minimum 2-foot paved apron the entire width of the portion of the driveway that intersects the roadway.

(4) Minimum distance between driveways on the same side of the street shall be in accordance with the following table:

Roadway Classification	Distance
Arterial roadways	75 feet
Collector roadways	50 feet
Local roadways	35 feet

(a) Driveway spacing shall be measured at the edge of the right-of-way, parallel to the centerline of the roadway, between the inside edges of two adjacent driveways.

(i) Driveway spacing on cul-de-sacs or other turnarounds shall be measured along the edge of the right-of-way.

11.12.070 HIGH VOLUME DRIVEWAY STANDARDS

(A) This subsection applies to driveways that access a parcel containing uses which generate more than 10 vehicle trips during the peak hour.

(1) Driveways under this subsection shall be designed by a qualified professional.

(2) Minimum 18-inch diameter culverts with sloped end sections are required when the ditch depth is 24 inches or deeper.

(3) Driveway dimensions.

(a) Driveway width shall be a minimum of 24 feet wide, except as provided in subparagraph (d) of this paragraph.

(b) Driveways greater than 35 feet in width shall be designed to ensure snow storage equal to or greater than the driveway width at the edge of the roadway is available within the right-of-way, in the

direction of anticipated snow removal, fronting the property to the extent feasible.

(c) The radius of the driveway curve return shall be a minimum of 20 feet, except as provided in subparagraph(d) of this paragraph.

(d) Driveway curve returns or driveway width may be less in certain circumstances such as angled or one-way driveways. However, the edge clearance shall be a minimum of 20 feet.

(4) Driveways shall be designed such that vehicles turning into or out of the driveway do not encroach into the opposing lane.

(5) Access to arterials is discouraged when other options are available.

(6) Driveways fronting on paved roadway surfaces shall have a paved apron to the furthest point of curvature from the roadway.

(7) Signage and striping, if used, shall conform to the *2016 Alaska Traffic Manual* (Alaska Department of Transportation and Public Facilities) and shall be maintained by the landowner.

(8) High volume driveways shall be separated from intersections and other high volume driveways in accordance with the following table:

Minimum High Volume Driveway Spacing (feet)										
Classification of road being accessed	Posted speed limit or 85th percentile speed of road being accessed (mph)	Total vehicle trip generation of subject parcel (vph)								
		11-100			101-250			> 250		
		Total vehicle trip generation of subject parcel, nearby parcel, or classification of cross street			Total vehicle trip generation of subject parcel, nearby parcel, or classification of cross street			Total vehicle trip generation of subject parcel, nearby parcel, or classification of cross street		
		11-100 vph or local road	101-250 vph or collector	> 250 vph or arterial	11-100 vph or local road	101-250 vph or collector	> 250 vph or arterial	11-100 vph or local road	101-250 vph or collector	> 250 vph or arterial
Local	≤30	35	70	150	70	150	150	150	150	300
Collector	≤30	70	150	300	150	150	300	300	300	300
	>30	70	150	300	150	300	300	300	300	300
Arterial	≤40	150	300	300	300	300	600	300	600	600
	>40	150	300	600	300	600	600	600	600	600

(a) Driveway spacing shall be measured at the edge of the right-of-way, parallel to the centerline of the roadway, between the inside edges of two adjacent driveways or between the inside edges of a driveway and intersecting roadway.

(b) Driveway spacing applies to intersections and high volume driveways on the same side and opposite sides of the street.

(i) Driveway spacing does not apply to driveways or intersections on opposite sides of streets that have a non-traversable median.

(c) Driveway access within the functional area of an intersection should be avoided when possible.

(d) Developments which produce greater than 100 vehicle trips during the peak hour may access the first 600 feet of a local road measured from the intersection with a higher classification roadway, but may only be approved upon consideration of traffic impacts on residential properties.

(e) Driveways on opposite sides of the street shall:

(i) be aligned directly across from each other to the extent feasible with a lane offset no greater than six feet; or

(ii) meet the separation distances established by the table within MSB 11.12.070(A)(8).

(f) Driveway spacing may be reduced, as recommended by an engineer and approved by the Borough, to as low as one-half the distance specified in the minimum high volume spacing table in MSB 11.12.070(A)(8) for the following:

(i) right in/right out driveways;

(ii) when the cross street has a non-traversable median;

(iii) one-way driveways;

(iv) driveways accessing one way streets;

(v) driveways where the requirements of subparagraph (e) are not feasible, if the opposing driveways do not have overlapping left turns.

(v) driveways where a traffic impact analysis demonstrates capacity needs;

(vi) when sufficient mitigating factors are provided; or

(vii) driveways that are not able to meet separation distance from other existing driveways or intersections due to physical constraints.

(B) The following is required for driveways that access a parcel containing uses which generate more than 50 vehicle trips during the peak hour:

(1) STOP signs;

(2) painted STOP bars when accessing a paved roadway where the driveway crosses bike paths or sidewalks;

(3) relocation of pathways and sidewalks in front of STOP bars in accordance with ADOT&PF Central Region Standard Detail CR-T-1.20;

(4) installation of right turn lanes if warranted by the 1985 *National Cooperative Research Program Report 279*, Figure 4-23 (Transportation Research

Board); and

(5) installation of left turn lanes if warranted by the 1967 *Highway Record 211* (Highway Research Board).

11.12.080 TRAFFIC IMPACT ANALYSIS

(A) Driveways that access a parcel containing uses that generate traffic in excess of 100 vehicle trips during the peak hour require a traffic impact analysis which examines critical movement level of service (LOS) at the driveway and nearby roads and intersections.

(1) A traffic impact analysis for uses that generate less than 100 vehicle trips per hour may be required if the Borough determines that the traffic generated will detract from the safety of the roadway.

(a) In determining whether the access will detract from safety of the roadway the Borough shall consider:

(i) sight distance;

(ii) accident history;

(iii) bus stops;

(iv) road width;

(v) functional area; and

(vi) other traffic and safety related factors.

(b) A determination that the access will detract from safety of the roadway shall be issued in writing by the borough.

(2) The traffic impact analysis and driveway design shall be prepared by a professional civil engineer registered by the State of Alaska under AS 08.48.

(3) Level of service and operational analysis for a traffic impact analysis prepared under this section must be performed in accordance with the *Highway Capacity Manual, 6th Edition* (Transportation Research Board).

(4) The minimum acceptable LOS at intersections and on road segments both on the development's anticipated opening date and in the design year is:

(a) LOS C, if the LOS on the date of application is LOS C or better; or

(b) LOS D, if the LOS on the date of application is LOS D or poorer; however, if the LOS is poorer than LOS D, a lower minimum LOS is acceptable if the operation of the roadway does not deteriorate more than 10 percent in terms of delay time or other appropriate measures of effectiveness from the LOS

before the development's anticipated opening date.

(5) A traffic impact analysis prepared under this section must address:

(a) intersections on roadways where traffic on any approach is expected to increase, as a result of the proposed development, by at least five percent of the approach's capacity;

(b) segments of roadways between intersections where total traffic is expected to increase, as a result of the proposed development, by at least five percent of the segments' capacity;

(c) roadways and intersections where the safety of the facilities will deteriorate as a result of the traffic generated by the development;

(d) each driveway that will allow egress from or ingress to a roadway for the proposed development;

(e) parking and circulation routes within the proposed development, to the extent necessary to ensure that traffic does not back up onto a roadway; [AND]

(f) pedestrian and bicycle facilities that are part of the roadway to which a permit applicant seeks access;and

(g) the anticipated opening date of the development.

(6) A traffic impact analysis prepared under this section must consider:

(a) projected traffic at the development's anticipated opening date, excluding the traffic generated by the development; and

(b) projected traffic at the development's anticipated opening date, including the traffic generated by the development.

(7) A traffic impact analysis prepared under this section for a development expected to generate 250 or more vehicle trips during the peak traffic hour of the adjacent roadway must, in addition to the projected traffic volumes before and after the completion of the proposed development, consider:

(a) the projected traffic in the design year for the proposed development, excluding traffic generated by the development; and

(b) the projected traffic for the design year for the proposed development including the traffic generated by the development.

11.12.090 TRAFFIC IMPACT MITIGATION

(A) A traffic impact mitigation plan shall be

submitted in association with the traffic impact analysis required under MSB 11.12.080.

(B) The traffic impact mitigation plan shall identify improvements, to be made by the permittee, to a roadway or intersection in order to maintain an acceptable LOS if a roadway or intersection has an:

(1) acceptable LOS, under MSB 11.12.080(A)(3), without traffic generated by the development; and

(2) unacceptable LOS, under MSB 11.12.080(A)(3), with traffic generated by the development:

(a) at the anticipated opening date of the development; or

(b) in the design year of the development, for a development expected to generate 250 or more vehicle trips during the peak hour of the adjacent roadway on the anticipated opening date of the development.

(C) A traffic impact mitigation plan shall be submitted if a roadway has an unacceptable LOS under MSB 11.12.080(A)(3) without traffic generated by the development, either at the anticipated opening date of the development or in the design year of the development.

(1) The mitigation plan shall propose improvements to the roadway so the operation of the roadway does not deteriorate more than 10 percent in terms of delay time or other appropriate measures of effectiveness with the addition of the traffic generated by the development at the anticipated opening date of the development or in the design year.

(D) A traffic impact mitigation plan prepared under this section must identify all of the following:

(1) locations where road improvements are necessary to mitigate traffic impacts, including locations where the LOS is less than acceptable under MSB 11.12.080(A)(3);

(a) due to the development at either the anticipated opening date or the design year, or

(b) at either the anticipated opening date or the design year without the development and improvements are necessary to prevent the LOS from deteriorating further;

(2) road improvement alternatives that will achieve an acceptable LOS or minimize degradation of service below an already unacceptable LOS;

(a) on the anticipated opening date of the development, and

(b) in the design year of the development, for a development expected to generate 250 or more vehicle trips during the peak hour of the adjacent roadway on the anticipated opening date of the development;

(3) bicycle or pedestrian access improvements necessary to accommodate bicycle and pedestrian traffic as negotiated between the Borough and the applicant; and

(4) [IMPROVEMENTS NEEDED FOR] internal circulation and layout parking plans.

(E) The Borough will review and comment upon a traffic impact mitigation plan prepared under this section and submitted for a proposed development. The Borough will, in its discretion, request clarification or further analysis of the impacts that it considers necessary to adequately consider the risks presented to the traveling public by the proposed development. If alternative means are proposed by an applicant for mitigation of the traffic impacts of a proposed development, the Borough will select the alternative that provides the greatest public benefit, at the least private cost, and that meets the appropriate LOS on an impacted roadway. If the Borough accepts a means of mitigation, the mitigation must be completed by the

permittee as part of a construction permit issued under this title.

(F) The traffic impact mitigation plan shall ensure:

(1) internal circulation and parking layout provides sufficient queuing distance within the development between the roadway and potential internal block points so that traffic does not regularly back up onto the roadway; and

(2) impacts to pedestrian and bicycle traffic are mitigated.

(G) The Borough will, in its discretion, relax the requirements for mitigation under this section, if it finds in writing that [THE]:

(1) without the traffic generated by the development, the roadway and intersection achieve an acceptable LOS under MSB 11.12.080(A)(3) and would likely fall below an acceptable LOS within five years from the opening date;

(2) the traffic generated by the development results in an unacceptable LOS under MSB 11.12.080(A)(4); and

(3) the cost of mitigating the impacts is disproportionate to the cost of the development.

11.12.100 WAIVER OR REDUCTION OF STANDARDS

(A) The Borough may waive or reduce specific standards of this chapter based on physical constraints associated with the property or adjacent roadway, or mitigating factors associated with a traffic impact mitigation plan.

11.12.110 NONCONFORMING DRIVEWAYS

(A) Driveways which were permitted by the Borough prior to the date of adoption of this ordinance, but which do not otherwise meet standards of this chapter, are allowed to remain in the location that they were permitted except for when a permit is required under MSB 11.12.030(A)(4).

(B) Existing driveways which were given approval to construct, but which were not given final approval by the Borough as of the date of adoption of this chapter, are allowed to remain and may be approved under the standards that were in place at the time approval to construct was given. In cases where the standards in place at the time approval to construct was given are in conflict with this chapter, the lesser standards apply.

(C) Driveways in existence prior to July 3, 1984 shall be automatically granted a permit upon request.

Section 3. Effective date. This ordinance shall take effect January 1, 2021.

ADOPTED by the Matanuska-Susitna Borough Assembly this 15 day of September, 2020.

VERN HALTER, Borough Mayor

ATTEST:

LONNIE R. McKECHNIE, CMC, Borough Clerk

(SEAL)

PASSED UNANIMOUSLY: Hale, Nowers, McKee, Leonard, Mayfield, Sumner, and Boeve