INVITATION TO BID

20-095B

MATANUSKA-SUSITNA BOROUGH
PURCHASING DIVISION
PALMER, ALASKA

BID AND CONTRACT DOCUMENTS

FOR

MARBLE WAY FISH PASSAGE

OPENING DATE & TIME:

Monday, February 24, 2020 @ 2:00 PM

TABLE OF CONTENTS

SECTION I

ADVERTISEMENT

SECTION II

INSTRUCTIONS TO BIDDERS

SECTION III

SCOPE OF WORK & MODIFICATIONS AND SPECIAL PROVISIONS TO STANDARD SPECIFICATIONS

SECTION IV

BID FORM

SECTION V

SAMPLE AGREEMENT

SECTION VI – FORMS & DOCUMENTS

CERTIFICATE OF INSURANCE (COI)
BID BOND
SUB CONTRACTOR/SUPPLIER LIST
PAYMENT BOND
PERFORMANCE BOND
CONSENT OF SURETY TO FINAL PAYMENT
CONTRACTOR'S RELEASE AND AFFIDAVIT OF PAYMENTS OF DEBTS AND CLAIMS
FIELD MEMO
GRAVEL SOURCE VERIFICATION FORM

SECTION VII

NOTICE TO CONTRACTORS STATE OF ALASKA DEPARTMENT OF LABOR FORMS AND PUBLICATIONS

SECTION VIII

ATTACHMENTS

BID #20-095B

SECTION I

ADVERTISEMENT

MATANUSKA-SUSITNA BOROUGH
350 East Dahlia
Palmer, Alaska 99645

ADVERTISEMENT

VENDOR		ACCOUNT #	DATE FOR ADVERTISEMENT
Anchorage Daily News		MATA 0070	1/30/2020
TYPE OF AD:	( ) Display	(X) Classified	( ) Public Information

The material herein must be printed in its entirety on the dates shown above. Affidavit of publication is required prior to payment.

MATANUSKA-SUSITNA BOROUGH
BID #20-095B

MARBLE WAY FISH PASSAGE

The Matanuska-Susitna Borough is soliciting bids from qualified contractors to realign and upgrade Marble Way and improve the fish passage on Cottonwood Creek. This project will involve, but is not limited to, clearing, grubbing, excavation, import and placement of borrow material, import and placement of aggregate surface course, installing structural plate pipe-arches with concrete headwalls, installing guardrail and placing topsoil and seed.

Bid documents are available to download for free beginning **Wednesday, January 29, 2020** from the MSB Purchasing Division's website, at https://www.matsugov.us/contractopportunities. For more information call (907) 861-8601, Fax (907) 861-8617, or e-mail purchasing@matsugov.us.

Deadline for Questions: **Friday, February 14, 2020 at 5:00 PM**

Bids open: **Monday, February 24, 2020 at 2:00 PM in the Purchasing Division**

Bids must be received in the Purchasing Division prior to the time fixed for opening of the bids to be considered. Time of receipt will be determined by the time stamp in the Purchasing Division.

Persons needing accommodation in order to participate should contact the borough ADA coordinator at (907) 861-8404.

The Matanuska-Susitna Borough reserves the right to accept or reject any or all bids, waive any and all technicalities or informalities it deems appropriate. Award of this project is subject to the availability of funding.

Page 1 of 1	Approved by: **Signature on File**

DEPARTMENT ACCOUNT NO.: **265.000.000 422.000**

BID #20-095B

SECTION II

INSTRUCTIONS TO BIDDERS

BID #20-095B

MARBLE WAY FISH PASSAGE

INSTRUCTIONS TO BIDDERS

ARTICLE 1 - DEFINITIONS

1.1 Bidding Documents include the Advertisement or Invitation to Bid, Instructions to Bidders, bid form, other sample bidding and contract forms, proposed Contract Documents, including any Addenda issued prior to receipt of bids and bond forms. Contract Documents proposed for the work consist of the Borough-Contractor Agreement, Conditions of the Contract (General, Supplementary and other Conditions), Drawings, Specifications, and all Addenda issued prior to and all Modifications issued after execution of the Contract.

1.2 All definitions set forth in the General Conditions of the Construction Agreement or in other Contract Documents are applicable to the Bidding Documents.

1.3 Addenda are written or graphic instruments issued by the Borough prior to the execution of the Contract which modify or interpret the Bidding Documents by additions, deletions, clarifications, or corrections.

1.4 A Bid is a complete and properly signed proposal to do the work or designated portion thereof for the sums stipulated therein, submitted in accordance with the Bidding Documents.

1.5 The Base Bid is the sum stated in the Bid for which the Bidder offers to perform the work described in the Bidding Documents as the base, to which work may be added, or from which work may be deleted for sums stated in Alternate Bids.

1.6 An Alternate Bid (or Alternate) is an amount stated in the Bid to be added to or deducted from the amount of the Base Bid, if the corresponding change in the work, as described in the Bidding Documents, is accepted.

1.7 A Unit Price is an amount stated in the Bid as a price per unit of measurement for materials or services, as described in the Bidding Documents or in the proposed Contract Documents.

1.8 A Bidder is a person or entity who submits a Bid.

1.9 A Sub-bidder is a person or entity who submits a Bid to a Bidder for materials or labor for a portion of the work.

1.10 Any interested party submitting a bid on Matanuska-Susitna Borough (MSB) projects should first review the MSB Debarment/Suspension List. This listing is available on the MSB web page under Economy and Bids. Any submission of a bid, with participation or involvement of an individual, company, firm or corporation on this list will render the bid as non-responsible.

ARTICLE 2 - BIDDER'S REPRESENTATIONS

2.1 Each Bidder by making a Bid represents that:

2.1.1 The Bidder has read and understands the Bidding Documents and the Bidder's Bid is made in accordance therewith.

2.1.2 The bidder has visited the site and has taken other steps as may be necessary to ascertain the nature and local conditions of the work, the general and local conditions which could affect the work or costs thereof. Failure to do so will not relieve Bidders of responsibility for estimating properly or the difficulty or cost of successfully performing the work. The submission of a Bid shall be an admission that the Bidder has made such examination and is satisfied as to the conditions to be encountered in performing the work and as to the requirements and accuracy of the Bidding Documents.

2.1.3 The Borough assumes no responsibility for any understanding or representations concerning conditions made by any of its officers, agents, or employees prior to the execution of this Contract, unless such understanding or representations are expressly stated in the Bidding Documents or Addenda.

2.1.4 The Bidder shall include in their Bid sums sufficient to cover all items required by the Contract and the conditions of the site(s), and shall rely entirely upon their own examination in making their Bid. The submission of a Bid shall be taken as a prima facie evidence of compliance with this paragraph.

2.1.5 The Bidder's Bid is based upon the materials, systems, and equipment required by the Bidding Documents without exception.

ARTICLE 3 - BIDDING DOCUMENTS

3.1 Copies

3.1.1 Bidders may obtain complete sets of the Bidding Documents from the issuing office's webpage as designated in the Advertisement or Invitation to Bid.

3.1.2 Bidders shall use complete sets of Bidding Documents in preparing Bids; the Borough does not assume any responsibility for errors or misinterpretations resulting from the use of incomplete sets of Bidding Documents. If material required for bidding purposes by these documents is absent, the Bidder is required to notify the Purchasing Officer.

3.1.3 The Borough in making electronic copies of the Bidding Documents available on the above terms does so only for the purpose of obtaining Bids on the work, and does not confer a license of grant for any other use.

3.2 Interpretation or Correction of Bidding Documents

3.2.1 Bidders and Sub-bidders shall promptly notify the Purchasing Officer by fax at 861-8617, or by e-mail at purchasing@matsugov.us of any ambiguity, inconsistency, or error which they may discover upon examination of the Bidding Documents or of the site and local conditions.

3.2.2 Bidders and Sub-bidders requiring clarification or interpretation of the Bidding Documents shall make a written request which shall reach the Purchasing Officer at least five work days prior to the date for receipt of Bids. Questions or requests for clarifications shall be directed to the borough's Purchasing Officer at purchasing@matsugov.us. Questions or requests for clarification directed to any other member of the borough staff, or consultant may be grounds for rejection of bid as being irregular

3.2.3 Any interpretation, correction, or change of the Bidding Documents will be made by Addendum. Interpretations, corrections, or changes of the Bidding Documents made in any other manner will not be binding, and Bidders shall not rely upon such interpretations, corrections, and changes.

3.3 Addenda

3.3.1 Addenda will be posted on the Borough's Purchasing webpage, notice will be emailed to all known by the Purchasing Division to have requested to be added to a plan holders list for the solicitation.

3.3.2 Copies of Addenda will be made available for inspection wherever Bidding Documents are on file for that purpose.

3.3.3 No Addenda will be issued later than four work days prior to the date for receipt of Bids, except an Addendum withdrawing the request for Bids, or one which includes postponement of the date for receipt of Bids.

3.3.4 Each Bidder shall be responsible for ascertaining prior to submitting their Bid that they have received all Addenda issued, and they shall acknowledge their receipt in their Bid.

ARTICLE 4 - BIDDING PROCEDURE

4.1 Form and Style of Bids

4.1.1 A Bid shall constitute an irrevocable offer to enter into a contract with the Borough on the terms of the Bid and the Bidding Documents. Bids shall be submitted on forms provided in the Bidding Documents.

4.1.2 All blanks on the Bid form shall be filled in, typed or written legibly in ink (preferably in **blue** ink).

4.1.3 Where required on the Bid, Bidders must quote on all items and they are warned that failure to do so may disqualify the Bid. When quotations on all items are not required, Bidders should insert the words "no bid" in the space provided for any item where no quotation is made.

4.1.4 Bids shall specify a unit or lump sum price, typed or written legibly in ink for each Bid item called for. In case of error in the extension of prices, the unit price will govern. Bids may be rejected if they show any omissions, alteration of the forms, additions not called for, conditional or alternate Bids not called for, qualified bids, or irregularities of any kind.

4.1.5 Any interlineation, alteration or erasure must be initialed by the signer of the Bid.

4.1.6 All requested Alternates shall be Bid. If no change in the Base Bid is required, enter "No Change."

4.1.7 Where two or more Bids for designated portions of the work have been requested, the Bidder may, without forfeiture of their Bid Guarantee, state their refusal to accept award of less than the combination of Bids they so stipulate. The Bidder shall make no additional stipulations on the Bid form nor qualify their Bid in any other manner.

4.1.8 Each copy of the Bid shall include the legal name of the Bidder and a statement that the Bidder is a sole proprietor, a partnership, a corporation, or some other legal entity. Each copy shall be signed by the person or persons legally authorized to bind the Bidder to a contract. A Bid submitted by an agent shall have a current power of attorney attached, certifying the agent's authority to bind the Bidder. The full name, address, and corporate or partnership title, including status of each person signing shall be typed or printed below the signature.

4.2 Bid Guarantee

4.2.1 Any bid exceeding $50,000 for total of all base items and alternates shall be accompanied by a certified check, money order, cashier's check, or Bid Bond in the amount of at least 5% of the total Base Bid amount, made payable to the Matanuska-Susitna Borough, Palmer, Alaska, with good and sufficient surety or sureties acceptable to the Borough. Bid Guarantees will be held until the Agreement is executed or for 60 days whichever is less. Power-of-Attorney for the person signing the Bid Bond for the Surety must be submitted with the Bid Bond.

4.2.2 If a surety bond is submitted, it shall be written on the form included in the Bidding Documents and the attorney-in-fact who executes the bond on behalf of the surety shall affix to the bond a certified and current copy of their power of attorney.

4.3 Submission of Bids

4.3.1 All copies of the Bid, the Bid Guarantee, if any, and any other documents required to be submitted with the Bid shall be enclosed in a sealed envelope. The envelope shall be addressed to: Matanuska-Susitna Borough, Purchasing Division, 350 East Dahlia Avenue, Lower Level, Palmer, Alaska, 99645, and shall be identified with the Project name, Bid Number, and Bidder's name and address. If the Bid is sent by mail, the sealed envelope shall be enclosed in a separate mailing envelope with the notation "SEALED BID ENCLOSED" on the face thereof.

4.3.2 Bids shall be deposited at the designated location **prior** to the time and date for opening of Bids indicated in the Advertisement or Invitation to Bid, or any extension thereof made by Addendum. Bids received after the time and date for receipt of Bids are late Bids, will not be considered, and will be returned unopened.

4.3.3 The Bidder shall assume full responsibility for timely delivery at the location designated for receipt of Bids.

4.3.4 Oral, telephonic, email or faxed Bids are invalid and will not receive consideration.

4.3.5 Bids will not be considered if the following documents are not completely filled out and submitted with the bid: See documents listing on “Bid Form”.

4.3.6 A checklist is provided on the Submittal Page as a courtesy to prospective bidders. The checklist may not be all inclusive; it is the Bidder’s responsibility to make sure they comply with all requirements within the solicitation documents.

4.3.7 If more than one Bid is offered by any one party, by or in the name of their clerk. Partner, or other person, all such Bids will be rejected. A party who has quoted prices to a Bidder is not thereby disqualified from quoting prices to other Bidders, or from submitting a Bid directly for the work.

4.4 Modification or Withdrawal of Bid

4.4.1 A Bid may not be modified, withdrawn or canceled by the Bidder during the stipulated time period following the time and date designated for the opening of Bids, and each Bidder so agrees in submitting their Bid.

4.4.2 Prior to the time and date designated for opening of Bids, any Bid submitted may be modified or withdrawn by notice to the Borough at the place designated for receipt of Bids. Such notice shall be in writing with the signature of the Bidder, so worded as not to reveal the amount of the original Bid, and delivered in person, by email or by fax. If by fax or email, the properly notarized notice shall be received before the time and date set for opening of Bids. Notices may be sent by fax to 907-861-8617 or email to purchasing@matsugov.us. The Borough shall not be responsible for the opening or security of modifications or withdraws submitted by fax or email. Contractors are advised to call the Purchasing Division at 907-861-8601 to verify receipt of faxed or emailed notices.

4.4.3 Withdrawn Bids may be resubmitted up to the time designated for the receipt of Bids, provided that they are then fully in conformance with these Instructions to Bidders.

4.4.4 Bid Guarantee, if any is required, shall be in an amount sufficient for the Bid as modified or resubmitted.

ARTICLE 5 - CONSIDERATION OF BIDS

5.1 Opening of Bids

5.1.1 The properly identified Bids received on time will be opened publicly and will be read aloud. An abstract of the Base Bids and Alternate Bids, if any, will be made available to Bidders upon request after the Purchasing Officer has tabulated or summarized the results.

5.1.2 No responsibility will attach to the Borough or its representatives for the premature opening of, or the failure to open, a Bid not properly addressed and identified.

5.1.3 When vendors and/or contractors propose equal pricing (or tie bids), bids will be reviewed by the Purchasing Officer to determine responsiveness. If all requirements for the bid being responsive are met, then the award or recommendation of the award will be made in favor of the bid which received the earliest time stamp prior to bid opening.

5.2 Rejection of Bids

5.2.1 The Borough shall have the right to reject any or all Bids and to reject a Bid not accompanied by any required Bid Guarantee or by other data required by the Bidding Documents, or to reject a Bid which is in anyway incomplete or irregular.

5.3 Acceptance and Award

5.3.1 This Contract, if awarded, shall be made only to a qualified, responsive and responsible bidder who submits the lowest bid. The Purchasing Officer shall determine whether a bidder is qualified, responsive and responsible based on:

A. The skill and experience demonstrated by the Bidder in performing contracts of a similar nature;

B. The Bidder's record of honesty and integrity;

C. The Bidder's capacity to perform in terms of facilities, personnel, and financing;

D. Whether the Bidder has been debarred or suspended under Section 3.08.235 of the Matanuska-Susitna Borough Code.

E. At all times the best interests of the Borough shall be recognized in awarding bids.

5.3.2 The Borough may waive any informality or irregularity or correct any purely arithmetical or clerical error apparent on the face of the Bid in any Bid or Bids received, when such waiver or correction is in the interest of the Borough. The Borough reserves the right to reject any and all Bids.

5.3.3 The Borough further reserves the right to accept or reject any or all items of any Bid, unless the Bidder qualifies such Bid by specific limitation; also to make an award to the Bidder whose aggregate Bid or any combination of Bid items is lowest.

5.3.4 The Borough shall have the right to select and accept Alternates in any order or combination, and to determine the low Bidder on the basis of the sum of the Base Bid and the Alternates accepted.

5.3.5 The Bidders past performance under Borough Agreements; If the Bidder has failed in any material way to perform its obligations under any Agreement with the Borough, the Bidder may be determined as a non-responsible Bidder.

ARTICLE 6 - POST BID INFORMATION

6.1 Contractor's Qualification Statement

6.1.1 Bidders to whom award of a Contract is under consideration shall submit to the Purchasing Officer upon request, a properly executed Contractor's Qualification Statement, unless such a Statement has been previously required and submitted as a prerequisite to the issuance of Bidding Documents.

6.1.2 Bidders shall attach to the Qualification Statement a sheet listing the following four additional requirements and submit to the Purchasing Officer:

A. Names of surety companies utilized in the last five years.

B. Estimate Progress Schedule for the completion of the work.

C. A resume of the Company and of the job Superintendent for the project.

D. A list of other projects planned to be concurrent with the construction phase of this project.

ARTICLE 7 – PAYMENT AND PERFORMANCE BONDS

For any bid exceeding $50,000 for total of all base items and alternates, the successful Bidder shall furnish the Purchasing Officer a Performance and Payment Bond in the full amount of the Agreement and shall maintain the Bond in force during the continuance of the Agreement including the one-year warranty period, unless otherwise specified. The Bond shall be for the faithful performance of the Agreement in all respects including, but not limited to, payments for all materials and labor. All alterations, extensions of time, additional work and other changes authorized by the Agreement Documents may be made without securing the consent of the Surety or Sureties. Power-of-Attorney for the person signing the Bond for the Surety must be submitted with the Bond. Local Bond Exemptions under MSB 3.08.530 will NOT be considered for this project.

ARTICLE 8 - FORM OF AGREEMENT BETWEEN BOROUGH AND CONTRACTOR

The Contract shall be in the form provided with the Bidding Documents.

ARTICLE 9 - SUBSTITUTION OF MATERIALS AND METHODS

There will be no substitutions prior to award of contract unless otherwise specified.

ARTICLE 10 - TYPE OF SPECIFICATIONS

10.1 Technical Provisions

10.1.1 The technical provisions of these Specifications are the abbreviated or "streamlined" type and include incomplete sentences. Omission of words or phrases such as "the Contractor shall", "in conformity therewith", "shall be", "as noted on the drawings", "according to the plans", “a”, and/or "the", are intentional. Omitted words or phrases shall be supplied by inference in the same manner as they are when a note occurs on the Drawings.

10.1.2 The Contract shall provide all items, articles, materials, operations, or methods listed, mentioned, or scheduled on the Drawings and/or herein, including labor, necessary equipment and parts, for adequate performance and sound construction as intended by these documents.

10.1.3 Wherever the word "approved", "satisfactory", "directed", "submitted", "inspected", "notify" or similar words or phrases are used, it shall be assumed that the word "Purchasing Officer" follows the verb as the object to the clause, such as "approved by the Purchasing Officer" or "submitted to the Purchasing Officer".

10.1.4 Wherever "or equal" or similar phrases are used, it shall be assumed that decisions as to quality and design shall rest with the Purchasing Officer. All equal items shall be approved in writing.

ARTICLE 11 - SUBCONTRACTORS

The apparent low bidder shall list the names of the proposed subcontractors and suppliers as provided on the form under, "Proposed Subcontractors and Suppliers". A list of all other subcontractors and suppliers who are to furnish the principal items of labor, equipment, and material proposed for the work shall be submitted within 24 hours of being requested. If none are utilized, state “None”.

ARTICLE 12 - PREPARATION OF BIDS

12.1 Follow instructions in Article 4.3.1 of these Instructions to Bidders.

12.2 To be considered responsive, all of the required documents must be included in the sealed envelope with the Bid Form.

ARTICLE 13 - BIDDER VIOLATIONS OF TAX OBLIGATIONS

13.1 No Contract shall be awarded to any individual, firm, corporation, or business that is found to be delinquent in any area of taxation, lease or rental agreement with the Borough which has not been remedied within ten calendar days of receipt of written notice.

13.2 This Contract can be terminated for cause if it is determined that the individual, firm, corporation or business is in arrears of any taxation, lease or rental agreement that is due to the Borough that is not remedied within ten calendar days of notification by certified mail.

13.3 The Borough reserves any right it may have to offset amounts owed by an individual, firm, corporation, or business for delinquent Borough taxes against any amount owing to the same under a Contract between the Borough and the same.

ARTICLE 14 - EXECUTION OF CONTRACT

14.1 The Bidder whose Bid is accepted shall execute the Contract and furnish the required bonding and insurance within five working days after Notice of Intent to Award of the Contract is issued. The Contract shall be considered executed by the successful Bidder when the Contract is signed by an authorized representative of the Bidder and the bond(s) and insurance certificate(s) are received by the Purchasing Officer. Failure or neglect of the Bidder to execute the Contract within the time specified may result in a forfeiture of the Bid Guarantee and award of the Contract to the next lowest Bidder.

14.2 The Borough will execute the Contract within ten calendar days after execution by the Bidder as set forth above. The date the Contract is executed by the Borough is the Contract Date. The rights and obligations provided for in the Contract shall become effective and binding upon the parties as of the Contract Date.

ARTICLE 15 - INSURANCE REQUIREMENTS

See Insurance Requirements in Sample Agreement.

ARTICLE 16 - STATE OF ALASKA PREVAILING WAGE SCALE/CERTIFIED PAYROLL

The Contractor shall comply with the Provisions of Title 36 of the Alaska Statutes for any construction projects awarded by the State of Alaska or its political subdivisions, such as local governments. To obtain the latest regulations and prevailing rate for wages. http://labor.alaska.gov/lss/pamp600.htm.

It is the Contractor's responsibility to meet and comply with all mandated submissions and documentation required by the Alaska Department of Labor, Wage and Hour Administration, Labor Standards and Safety Division, 1251 Muldoon Road, Suite 113, Anchorage, AK 99504.

ARTICLE 17 - LOCAL BIDDER PREFERENCE

RESERVED

ARTICLE 18 - MATANUSKA-SUSITNA BOROUGH BUSINESS LICENSE

Matanuska-Susitna Borough Code, Chapter 3.36, requires that all entities conducting business within the Borough boundaries have a current business license issued by the Matanuska-Susitna Borough. MSB §3.36.040.

ARTICLE 19 - ALASKA AND CONTRACTORS LICENSES

All bidders must be in compliance with state of Alaska Statutes 08.18 and 45.70.

ARTICLE 20 - PROTEST OF AWARD OF BID

Within two days of service of the Purchasing Officer's determination of the apparent successful bid, a Bidder who wishes to protest the determination shall lodge a protest with the Purchasing Officer. The protest shall be in writing on a form provided by the Purchasing Officer. The protest shall describe with particularity the alleged errors in the award recommendation. The Purchasing Officer shall conduct a review and, within three working days of receipt of the protest, issue a determination. Full text of the protest and appeal procedures, as well as the protest form, can be downloaded from the Borough's web site at www.matsugov.us, selecting "Services", then selecting "Forms" under Forms and Documents, then selecting "Purchasing Forms". A copy can also be obtained by contacting the Purchasing Division at (907) 861-8601.

In order to receive notice of the apparent successful bid, the Bidder must provide the Borough with an email address. It is the responsibility of the Bidder to follow the selection process and stay apprised of the bid due date, the date notice of apparent successful bidder is issued and the period in which protests can be filed.

ARTICLE 21 - ACCEPTANCE OF CONTRACT/AGREEMENT TERMS AND CONDITIONS

By signing the Bid Submittal Form, the bidder certifies that they have examined and accept the terms and conditions of the contract or agreement contained in this solicitation. The acceptance is inclusive of, but not limited to, all CONTRACT REQUIREMENTS, TERMS AND CONDITIONS, GENERAL PROVISIONS, AND SUPPLEMENTAL CONDITIONS along with any and all conditions contained in the INSTRUCTIONS TO BIDDERS associated with this solicitation. Submission of a bid in response to this solicitation, certifies that the bidder is willing to accept these terms and understands that failure to accept these terms will subject the bidder to forfeiture of the contract/agreement and loss of any bid guarantee as liquidated damages as outlined in the bid documents.

Bidders are encouraged to carefully examine the insurance requirements, any bonding requirements, and any Defense and Indemnification clause contained in the sample contract/agreement.

ARTICLE 22 - FLOW DOWN PROVISIONS

This Contract may include flow down provisions. This Contract may be issued in connection with another government agency and may include flow down or contract provisions required by that agency. In the event of a conflict between the terms and conditions of the general agreement and any flow down terms and conditions, the flow down terms and conditions shall govern. The Consultant agrees to comply with any and all flow down or contract provisions required by the Borough or another government agency that are included in the Contract. In the event that flow down or contract provisions required by other agencies or by Law are inadvertently omitted from this Contract, both parties agree to negotiate in good faith for that provisions inclusion into the Contract.

ARTICLE 23 - CONTRACTORS WARRANTY

All work under the Agreement shall be under warranty by the Contractor for one year from the Final Acceptance Date except when a different period is identified in the SPECIFICATIONS/SCOPE OF WORK. This warranty shall require the Contractor to remedy promptly, without cost to the Owner, any and all defects in material and workmanship including any consequential damages resulting from defective materials or workmanship. If the defect, in the opinion of the Borough Representative, is of such nature as to demand immediate repair, the Borough shall have the right to take corrective action and the cost thereof shall be borne by the Contractor.

ARTICLE 24 - ENVIRONMENTAL SPILLS

Reporting or clean-up of any spills of oil and/or hazardous substances larger than one gallon must be reported to ADEC by the Contractor. Any quantity of a spilled hazardous substance must be cleaned up, containerized, and disposed of in a proper manner. All spills in the water must be reported immediately to ADEC. Clean-up procedures are specified in ADEC's Oil and Hazardous Substances Pollution Control Regulations, 18AAC75. All inquiries may be directed to the Wasilla ADEC office at 376-5038.

BID #20-095B

SECTION III

SCOPE OF WORK &
MODIFICATIONS AND SPECIAL PROVISIONS TO STANDARD SPECIFICATIONS

BID #20-095B

MARBLE WAY FISH PASSAGE

SCOPE OF WORK

General

This project's purpose is to realign and upgrade Marble Way and improve the fish passage on Cottonwood Creek. This project will involve, but is not limited to, clearing, grubbing, excavation, import and placement of borrow material, import and placement of aggregate surface course, installing structural plate pipe-arches with concrete headwalls, installing guardrail and placing topsoil and seed.

Marble Way is located in the Wasilla area, and may be accessed as follows: At Mile Post 42.2 of the Parks Highway, turn south on the Knik-Goose Bay Road. Proceed to Mile Post 4.5 and turn south onto the Fairview Loop Road. Proceed 0.6 miles and turn east on Marble Way. The BOP is 0.5 miles to the east. See project location and vicinity maps.

All construction shall be completed in accordance with the current Alaska Department of Transportation and Public Facilities (ADOT&PF) Standard Specifications for Highway Construction (SSHC) 2017 Edition. Project specific special provisions are provided in the following sections. The requirements contained in these specifications and special provisions are hereby made a part of this solicitation and resultant contract.

Work Description

- Supply labor, equipment, materials and supplies to perform the required work as shown on the construction plans for MSB project number 18-14-1793.

- Contractor is to provide resources to complete this project without any adjustments in the original bid amount or contract time.

- Contractor is required to obtain an ADEC APDES permit prior to utility relocation activities. Utility relocation work done by the utility companies will be performed under this permit.

- Contractor shall coordinate the road improvements with all utility relocation work. Request locates from the utilities having facilities in the area. Use the Alaska Digline, Inc. Locate Call Center. See Section 105-1.06 for digline number and a list of utility companies in the area.

- Normal work time will be between 7 a.m. and 7 p.m. Extensions will be considered and approved by the MSB Inspector.

- Contractor shall complete ROW and utility easement staking and clearing and all necessary SWPPP items for utility relocation support upon NTP. This work shall be included in items 201(3B), 642(1), 641(1), and 641(3). Additional stump removal for utility support will be directed if needed and is not included in these items. The anticipated additional utility support areas are as follows:
    - None outside of ROW or Temporary Construction Easements.

- Time is of the essence. Work shall be performed in one continuous time period after utility relocations are completed. All in-water work below Ordinary High Water shall be completed by July 15, 2020 and per Fish Habitat Permit 18-IV-0363. Final Completion shall be achieved by September 15, 2020.

- All work shall be completed in accordance with environmental permits, provided in the solicitation attachments.

- Estimated project magnitude is less than $500,000.

MATANUSKA-SUSITNA BOROUGH

STANDARD MODIFICATIONS

to the

ALASKA

DEPARTMENT OF TRANSPORTATION

AND PUBLIC FACILITIES

STANDARD

SPECIFICATIONS

FOR HIGHWAY CONSTRUCTION

2017 EDITION

STATE OF ALASKA
49TH
STEVEN M. KARI
No. CE 9203
1-17-2020
REGISTERED PROFESSIONAL ENGINEER

SECTION 101

DEFINITIONS AND TERMS

Standard Modifications

101-1.02 ACRONYMS. *Add the following:*

MSB Matanuska-Susitna Borough

101-1.03 DEFINITIONS

Add the following definitions:

BOROUGH -The Matanuska-Susitna Borough (MSB)

NON-FROST SUSCEPTIBLE. Material that contains 6 percent or less passing the No. 200 screen as determined by sieve analysis performed with ATM T-7 WAQTC FOP for AASHTO T 27/T 11 on minus 3-inch material.

Amend the following definitions:

CONTRACTING OFFICER. *Delete in its entirety and substitute the following:* The Contracting Officer shall be the Matanuska-Susitna Borough Purchasing Officer or his/her designee authorized to enter into and administer the contract on behalf of the Matanuska-Susitna Borough. He has the authority to make findings, determinations and decisions with respect to the contract and, when necessary, to modify or terminate the contract.

DEPARTMENT. *Delete and substitute*: BOROUGH. The Matanuska-Susitna Borough acting through its authorized representatives.

ENGINEER: *Delete in its entirety and substitute the following:***:** The Engineer is the authorized representative of the Borough Purchasing Officer and shall be a professional engineer licensed in the State of Alaska or, if applicable, an individual under the direct supervision of the professional engineer licensed in the State of Alaska, who is in responsible charge of the project. The Engineer is responsible for administration of the Contract.

HOLIDAYS. *Delete Items 2, 8, and 13 and substitute the following*:
2. Friday after Thanksgiving
8. Christmas Eve, December 24

INTERIM WORK AUTHORIZATION. *Delete in its entirety and substitute the following*: A written order by the Engineer initiating changes to the Contract within its general scope, without increasing cost or time of performance, until a subsequent Change Order is executed.

PLANS. *Delete text of PLANS and replace with*: The Borough's Contract drawings, profiles, typical cross sections, standard drawings, and supplemental drawings or reproductions showing the location, character, dimensions and details of the work.

STATE. *DELETE in its entirety and REPLACE with the following:* The Matanuska-Susitna Borough acting through its authorized representatives.

SUBGRADE. *Replace the definition of SUBGRADE with the following:* The soil or embankment upon which the pavement structure or surface course is to be constructed.

MSB 102919

SECTION 102

BIDDING REQUIREMENTS AND CONDITIONS

Standard Modifications

DELETE the section in its entirety and refer to the bid advertisement and sample contract documents for bidding information:

MSB 052419

SECTION 103

AWARD AND EXECUTION OF CONTRACT

Standard Modifications

DELETE this section in its entirety and refer to the solicitation documents for bidding and contract information:

MSB 052419

SECTION 104

SCOPE OF WORK

104-1.02 CHANGES. *Replace Item 1 with the following:* The Engineer reserves the right to make, in writing, at any time during the work, such changes in quantities and such alterations in the work as are necessary to satisfactorily complete the project. Such changes in quantities and alterations shall not invalidate the Contract nor release the surety, and the Contractor agrees to perform the work as altered.

If the alterations or changes in quantities significantly change the character of the work under the Contract, whether or not changed by any such different quantities or alterations, an adjustment, excluding loss of anticipated profits, will be made prior to the performance of the work. If a basis cannot be agreed upon, then an adjustment will be made either for or against the Contractor in such amount as the Engineer may determine to be fair and equitable.

If the alterations or changes in quantities do not significantly change the character of the work to be performed under the Contract, the altered work will be paid for as provided elsewhere in the Contract.

The term "significant change" shall be construed to apply only when the character of the work as altered differs materially in kind or nature from that involved or included in the original proposed construction.

DELETE: **2. OUTSIDE CONTRACT SCOPE**

SUBSTITUTE THE FOLLOWING:

2. OUTSIDE CONTRACT SCOPE

Changes determined to be outside of the general scope of the contract shall be done through the use of a supplemental agreement in accordance with MSB 3.08

104-1.03 DIFFERING SITE CONDITIONS. *Delete this subsection in its entirety and substitute the following:* During the progress of the work, if subsurface or latent physical conditions are encountered at the site differing materially from those indicated in the contract or if unknown physical conditions of an unusual nature, differing materially from those ordinarily encountered and generally recognized as inherent in the work provided for in the contract, are encountered at the site, the party discovering such conditions shall promptly notify the other party in writing of the specific differing conditions before they are disturbed and before the affected work is performed.

Upon written notification, the Engineer will investigate the conditions, and if he determines that the conditions materially differ and cause an increase or decrease in the cost or time required for the performance of any work under the Contract, an adjustment, excluding loss of anticipated profits, will be made and the Contract modified in writing accordingly. The Engineer will notify the Contractor of his determination whether or not an adjustment of the Contract is warranted.

No Contract adjustment that results in a benefit to the Contractor will be allowed unless the Contractor has provided the required written notice.

104-1.05 CLEANUP. *Delete in its entirety and substitute the following:*

Upon completion of the work and before final acceptance and payment, the work area and all ground occupied by the Contractor in connection with the work, shall be cleared of all rubbish, excess materials and equipment, and all parts of the work shall be left in a condition acceptable to the Borough Inspector.

All stakes used for stationing layout and all string lines used during paving shall be picked up and removed from the work site by the Contractor.

SECTION 105

CONTROL OF WORK

Standard Modifications

105-1.01 AUTHORITY OF THE ENGINEER. *ADD the following:*

When, in the opinion of the Engineer, conditions are such that the safety or convenience of the traveling public are adversely affected, the Contractor will be immediately notified in writing. The notice will state the defect(s), the corrective action(s) required, and the time required to complete such action(s). In no case shall this time exceed 24 hours. In the event that the Contractor fails to take the corrective action within the specified time, the Engineer reserves the right to have corrective action taken by outside forces. The cost of work by outside forces shall be deducted from any monies due or that may become due under the terms of this Contract.

105-1.06 UTILITIES.

2. Cooperation with Utility Owners. *DELETE Item 2 and REPLACE with the following:*

The Contractor shall request locates from all the companies and organizations having utilities in the area. The Contractor shall use the Statewide Locate Call Center for utility location services.

The Contractor shall also contact DOT&PF Maintenance & Operations Mat-Su District Superintendent at (907) 745-2159 for work within State owned rights-of-ways.

There may be various utility appurtenances located within the project limits. Cooperate with these utilities and coordinate schedule of work to allow them access to the project for their adjustments or relocation.

The Contractor assumes the obligation of coordinating their activities with utility owners, and shall cooperate with utility owners to facilitate removal, adjustment, or relocation operations, avoid duplication of work, and prevent unnecessary interruption of services.

Utility owners are not required to work in more than one location at a time, and shall be allowed to complete a specific section of work prior to commencing another section. Utility owners will not normally perform adjustment or relocation of underground utilities when the ground is frozen. Utility owners may prohibit the Contractor, through the Engineer, from working near utilities when the ground is frozen.

The Matanuska-Susitna Borough has sole discretion to grant permits for utility work within the Borough rights-of-way. The State of Alaska DOT&PF has sole discretion to grant permits for utility work within State rights-of-way. The Contractor shall allow parties with utility permits to work and make excavations in the project.

If utility owners do not complete their work in a timely manner, the Engineer may direct the Contractor to temporarily relocate the utilities, to construct new utilities, or to make necessary repairs to complete the utility work.

3. Utility Work. *ADD the following:*

t. Work around those utilities not designated for relocation on the plans. Contractor shall bear the expense for any changes or additional relocation requested for Contractor convenience. Work around all utility facilities, either

existing or relocated, throughout the project unless advised by the utility that the facility is abandoned in place.

u. Contractor is solely responsible for any changes in contract scheduling and contractor time, which result in the conditions in this specification not being met Schedule and coordinate the utility relocations with project construction as set forth in Section 108-1.03, Prosecution and Progress.

v. When Right of Way or Construction surveying is required prior to utility relocation, payment will be made as follows:

   a. Subsidiary to Item 642(1), Construction Surveying, if the Contractor is required to provide the surveying as part of the Contract; and

   b. Under Item 642(3), Three Person Survey Party, if the construction or Right of Way staking required by the utility is either in advance of the Contractor's two (2) week work plan, or not already required by the Contract.

ADD the following new Item:

5. Utility Relocation Requirements

Provide Traffic Control Plans and all traffic control as required for utility relocations, to promote safety and efficiency of public travel through the project area and safety of utility relocation work, all to the satisfaction of the Engineer.

When scheduling utility relocation work, the Contractor shall assume a six (6) day utility relocation crew work week (Monday through Saturday) excluding holidays.

The Contractor shall schedule and coordinate road construction work and utility relocation work to the satisfaction of the Engineer to maximize efficiency and minimize delay and/or multiple remobilizations for utility relocation crews to the satisfaction of the Engineer. The Contractor shall be responsible for the costs of unnecessary delay or remobilization of utility relocation crews as determined by the Engineer.

105-1.13 MAINTENANCE DURING CONSTRUCTION. *DELETE the first paragraph and REPLACE with the following:* The Contractor shall maintain the work, and those portions of the surrounding area or outside the project area affected by the work, from the date physical construction begins until project completion. This maintenance shall be a continual and effective effort prosecuted day by day, with adequate equipment and forces to the end that the work, and those portions of the project affected by the work, are kept in satisfactory condition at all times. The Contractor may be relieved of specified portions of this maintenance responsibility during a seasonal suspension of work.

The existing road systems, when utilized as haul roads, shall be maintained at the Contractor's expense. Maintenance of haul roads includes, but is not limited to, grading of potholes and application of water for dust control, as directed by the Engineer. Upon completion of hauling over a road, it shall be in as good or better condition than prior to commencement of hauling operations. This determination shall be made by the Engineer.

105-1.17 CLAIMS. *DELETE the subsection in its entirety and REPLACE with the following:* If the Contractor wishes to make a claim for an increase in the Contract Sum (Change Order), the Contractor shall give the Engineer written notice

thereof as soon as possible but at least within ten days of the first observance or awareness or notice of the basis for the claim, whichever is earlier. This notice shall be given by the Contractor before proceeding to execute the Work, except in an emergency endangering life or property in which case the Contractor shall proceed as needed. No such claim shall be valid unless so made and the claim must comply with and is governed by the terms of this section. Any change in the Contract Sum resulting from such claim shall be authorized only by a written fully executed Change Order.

Except for claims which have been waived by acceptance of final payment, and except as otherwise provided in this Contract, any claims, any disputes, or other questions arising out of, or relating to, this Contract shall be presented in writing by the Contractor to the Engineer. In presenting any claim, the Contractor shall clearly and specifically state in writing:

1. The specific contract provision under which the claim is made.

2. The contract item on which the claim is based.

3. A description of the specific nature and cause of the claim.

4. The specific relief including additional time and compensation to which the Contractor believes they are entitled.

5. The detailed factual basis of any additional costs or time claimed and all verifiable documentation necessary to support those actual costs or additional time.

6. A certification by the Contractor under penalty of perjury the claim is made in good faith, the supporting data are accurate and complete to the best of the Contractor's knowledge and belief, and the amount requested accurately reflects the contract adjustment for which the Contractor believes the Department is liable.

Claims must be submitted as soon as possible, but not later than ten days after the first observance or awareness or notice of the basis for the claim, whichever is earlier; in no case shall a claim be made more than ten days after the date of completion and acceptance of the entire contracted work. If the amount of time or compensation cannot be readily ascertained at the time the claim is submitted, the Contractor shall so advise the Department and such amounts shall be submitted as soon as they are discernible. In any case, the amount of time and compensation claimed together with all necessary supporting data, which could not have reasonably been available to the Contractor or a reasonably sophisticated contractor at the time of notice of claim, shall be submitted no later than 20 days after completion of the contract item of work on which the claim is based.

The Contractor represents to the Department and the Department relies upon the following representations to enter in this Contract with the Contractor:

1. The Department and Contractor recognize claims and litigation concerning claims result in increased contract costs for both parties. Further, both parties recognize both parties are subject to increased risk when stale claims are in dispute or are litigated;

2. The Department and Contractor agree separately from the Contract that compliance with this section is necessary to enhance identification of disputes, processing of claims, negotiations and settlement of disputed issues. Further, both parties agree verbal, written or any other notice not in full compliance with the terms of this section will not meet the terms and spirit of this section; and

3. Failure to comply with this section shall constitute a waiver and abandonment of the right to make any claim not fully compliant with this section.

Claim to the Engineer. As soon as received from the Contractor, a claim shall be acknowledged in writing by the Engineer. If the claim is not disposed of by agreement, the claim shall be reviewed by the Engineer who shall, unless he notifies the Contractor otherwise, within 14 days of receiving the Contractor’s final submittal of the claim, advise the Contractor of the

Engineer’s decision and communicate the decision to the Contractor in writing. The Engineer’s decision shall, unless otherwise determined on administrative appeal to the Contracting Officer or then determined by appeal to the Superior Court of Alaska, be final and conclusive. Any appeal from the Contractor of the Engineer’s decision to the Contracting Officer shall be commenced within 14 days of the decision. In the event no such appeal to the Contracting Officer is timely made, the decision of the Engineer shall be final and conclusive as to the dispute.

Pending final decision of any dispute hereunder, the Contractor shall proceed diligently with the performance of the Contract, and after the Engineer's decision is made, the Contractor shall proceed diligently with the performance of the Contract and in accordance with the Engineer's decision.

The parties agree at every level, including administrative appeal and litigation, all claims made will be made by the actual cost method, supported by actual invoices, payroll records and the like, and may not be made by the total cost method or any modifications thereof; or by the jury verdict method.

Appeal of Decision by Engineer. An appeal of the Engineer’s decision may be filed with the Contracting Officer. The appeal shall be filed within 14 days after the decision is served on the Contractor. An appeal by the Contractor may not raise any new factual issues, theories of recovery or claims for damages in amount or character or for additional time not presented to and decided by the Engineer in the decision appealed from except upon the showing of extraordinary circumstances not due to the fault or neglect of the Contractor or his agents. If allowed to make amended or additional claims, no such claims may be made unless they arise out of the same operative facts on which the original claim was based.

An appeal must contain a copy of the Engineer’s decision being appealed and identification of all factual or legal errors in the decision that form the basis for the appeal.

Upon receipt, the Contracting Officer shall advise the parties of the procedures that will be utilized to determine the appeal (i.e. briefing, hearing etc.) and any pertinent deadlines related thereto. The Contracting Officer shall handle the appeal of a claim expeditiously.

The Contracting Officer shall serve all parties personally or by certified mail with the Contracting Officer’s decision within 20 days after the hearing has ended or the Contracting Officer’s receipt of the final brief, unless the Contractor is notified otherwise. The Contracting Officer’s decision shall notify all parties that the Contracting Officer’s decision under this section may be appealed to the superior court in Palmer, Alaska in accordance with the Alaska Rules of Appellate Procedure. In the event no such appeal to the court is made within 30 days, the decision of the Engineer or the Contracting Officer shall be final and conclusive as to the dispute.

MSB 082119

SECTION 106

CONTROL OF MATERIAL

Standard Modification

106-1.02 MATERIAL SOURCES.

ADD the following new Item:

5. c. Extraction of material below or within four feet of the seasonal high water table requires a permit under MSB Code Chapter 17.30.

MSB 082719

SECTION 107

LEGAL RELATIONS AND RESPONSIBILITY TO PUBLIC

Standard Modifications

107-1.02 PERMITS, LICENSES AND TAXES.

DELETE Item 1. under the paragraph beginning with "In addition…" and REPLACE with the following:

1. Contact all government agencies having possible or apparent permit authority over that area, which may include, but are not limited to:

    a. US Army Corps of Engineers

    b. Alaska Department of Fish and Game

    c. Alaska Department of Environmental Conservation

    d. Alaska Department of Natural Resources

    e. Alaska Department of Transportation

    f. Matanuska-Susitna Borough

    g. All other tribal, federal, state, or local authorities;

107-1.06 SANITARY, HEALTH, SAFETY PROVISIONS. *ADD the following*: The Contractor shall provide and maintain restroom facilities for Contractor's employees and Owner's representatives at all work sites.

107-1.11 PROTECTION AND RESTORATION OF PROPERTY AND LANDSCAPE.

Under Item 2. Material Disposal Sites *add the following*:
Material disposal sites on private property adjacent to the project, shall be blended into the surrounding contours and permanently stabilized. No slope shall exceed 2:1, unless approved by the Engineer.

Under Item 7. Protected areas, *add the following*: All clearing and/or grubbing activities shall take place outside of the Migratory Bird Treaty Act (MBTA) window as determined by the U.S. Fish and Wildlife Service (FWS) under the website publication for the construction year: http://alaska.fws.gov/fisheries/fieldoffice/anchorage/pdf/vegetation clearing.pdf

107-1.16 *Delete and replace with the following:*

107-1.16 CONTRACTOR'S RESPONSIBILITY FOR UTILITY PROPERTY AND SERVICES.
Where the Contractor's operations meet any of the following conditions, the Contractor shall advise the owning Utility in writing at least 24 hours in advance of the work.

1. Operations anticipated to be within 10 feet of an overhead electrical line.
2. Operations anticipated to be within 3 feet of an underground electrical line according to locates provided by the owning Utility.

3. Operations requiring use of equipment, which is capable of coming within 10 feet of an overhead electrical line.

The notice shall indicate the location and duration of the work to be performed.

The Contractor shall provide an attendant whose sole responsibility is to perform as a safety observer while equipment is operating such that any part is capable of reaching within 15 feet of an overhead line.

Providing a safety observer for overhead electrical facilities, or a cable watch for buried electrical facilities, will not be paid for separately, but will be subsidiary to the item(s) of work being performed requiring these services.

MSB 102919

SECTION 108

PROSECUTION AND PROGRESS

Standard Modification

108-1.03 PROSECUTION AND PROGRESS. *DELETE the last sentence of the first paragraph and REPLACE with the following:* Submit the following at least two working days prior to the Preconstruction Conference:

ADD the following to Item 10: A completed Gravel Source Verification Form, found in section VI of the Invitation to Bid.

MSB 030619

SECTION 109

MEASUREMENT AND PAYMENT

Standard Modifications

109-1.02 MEASUREMENT OF QUANTITIES. Replace item, "14. Weighing Procedures" with "Weighing Procedures". "Weighing Procedures" is a subtopic under item "13. Ton (2,000 pounds)."

109-1.05 COMPENSATION FOR EXTRA WORK ON A TIME AND MATERIALS BASIS. *Add the following*: The rental rate area adjustment factors for this project shall be as specified on the adjustment maps for the Alaska - South Region.

109-1.08 FINAL PAYMENT. *Add the following sentence to the first paragraph:*
The Borough will not process the final estimate until the Contractor completes Items 1 through 4 in the first paragraph of subsection 105-1.16.

Add the following subsection:

109-1.10 EQUIPMENT RENTAL CONTRACTS.

1. Hourly Rate Basis.

Scope. Under this subsection, the Contractor shall furnish fully operated equipment, tools, materials, and laborers required in the performance of the work on the project as specifically designated and directed by the Engineer.

The work is to be performed and paid for on an hourly rate basis.

All personnel furnished by the Contractor under this specification shall be, and shall remain during the work hereunder, employees solely of the Contractor.

General Requirements. The work is to be done under the direction of the Engineer, and the Contractor's operations shall at all times be in accordance with the Engineer's instructions. These instructions by the Engineer shall be to the Contractor's supervisory personnel only, not to the operators or laborers. In no case shall these instructions by the Engineer be construed as making the Borough liable for the Contractor's operation of equipment and/or personnel. It is the Contractor's responsibility to prosecute the work in the safest and most expeditious manner.

2. Equipment

General. In the performance of the work to be done under this specification, the Contractor shall furnish, operate, maintain, service and repair equipment of the kinds, sizes, capacities and quantities set forth in the bid schedule or as directed by the Engineer.

The kinds, sizes, capacities and other requirements set forth shall be understood to be minimum requirements. The number of pieces of each equipment to be furnished and used shall be as the Engineer considers necessary for economical and expeditious performance of the work. The equipment shall be used only at such times and places as the Engineers may direct.

All equipment shall be fully operated by skilled operators, which operating shall be understood to include the operators, oilers, tenders, fuel, oil, air hose, lubrication, repairs, maintenance, insurance and all incidental items and expenses.

When the required equipment as a working unit is comprised of tractors and attachments, or of combinations of equipment, the attachments or combinations of equipment shall be of recognized standard sizes and capacities for efficient and economical performance with the tractor or power unit to which they are attached, or with which they are used in combination.

All equipment shall be in first-class working conditions and capable of full output and production. The minimum ratings of various types of equipment shall be as manufactured and based on manufacturer's specifications. Alterations of blowers, rack settings or other modifications will not be considered acceptable in achieving the minimum rating.

Tools. The Contractor shall provide manual equipment, hand tools, and small tools as required for the performance of the work

and as considered by the Engineer as necessary for efficient operations.

The Contractor shall designate, without direct compensation, by the Borough, one (1) job superintendent He shall also furnish such other personnel as required to satisfy Union, Borough or State regulations. Further, he shall furnish such other personnel required to provide servicing, maintenance, repair and other care essential for the upkeep of his equipment, tools, supplies and materials provided by him and involved in the performance of the work. The Contractor shall furnish, without direct compensation, all transportation of his personnel required in the performance of the work.

Unless otherwise set forth in the special provisions, the Borough will not furnish, provide or make available for the work anything other than right-of-way, engineering, directions and inspection.

3. Construction.

General. The performance of the work shall be in accordance with the instructions of the Engineer.

The work shall be performed in accordance with recognized standard and efficient methods. Operators of equipment and all personnel shall be conscientious and skilled in their duties.

Equipment and tools shall be maintained in first-class working condition and shall be replaced at any time when, in the opinion of the Engineer, their condition is below that normal for efficient output and production.

Timing and Sequence of Operations. The Contractor shall furnish equipment, tools, labor and materials in the kinds and number and at the times directed by the Engineer, and shall commence, continue, and stop any of the several operations involved in the work only as directed by the Engineer.

Normally, the work is to be done when weather conditions are reasonably favorable, up to six days per week, Mondays through Saturdays, holidays excepted.

Protection of Work and Provisions for Traffic. The Contractor shall furnish signs, lights, barricades and other protective devices at the sites of his operations to protect the work from damage, and to safeguard traffic passing or in proximity of work.

4. Measurement.

General. The number of hours of equipment operation to be paid for shall be the actual number of hours each fully-operated specified unit of equipment or each fully-operated specified combination of units of equipment, is actually engaged in the performance of the specified work on the designated areas in accordance with the instruction of the engineer, provided that the pay time will not include idle periods and standby time and provided further that no payment will be made for time used in oiling, servicing, or repairing of equipment, or in making changeovers of parts to the equipment.

The number of hours of equipment operation to be paid for, as determined above, will be paid for at the pertinent contract price per hour for each of the particular pay items for equipment shown in the bid schedule, which price and payment shall be full compensation for furnishing, operating, maintaining, servicing and repairing the equipment and for ail incidental costs related to the equipment as specified. The furnishing and operating of equipment of heavier type, or of larger capacity, or horsepower than specified will not entitle the Contractor to any extra compensation over his applicable contract unit price. Deviation from estimated quantities is normal and will not be considered as a basis for change in unit prices.

MSB 082217

SECTION 201

CLEARING AND GRUBBING

Special Provisions

201-3.01 GENERAL. *Add the following*:

All birch and spruce with a 5 inch diameter or larger at breast height shall be cut into 8 foot lengths, de-limbed, and stacked at locations approved by the Engineer for public removal. These locations shall be adjacent to the nearest side street or other approved site which does not create a traffic hazard due to lack of adequate parking for the public. The Department will notify the public of the availability of the timber once it has been stacked. Contractor, schedule the clearing and grubbing work to provide a two week period for the public to access each area of the project where timber is available a minimum of two weeks prior to completing the clearing and grubbing work for each area. The Contractor shall dispose of the timber left by the public after the two week time period.

The Contractor shall perform the work necessary to preserve and/or restore land monuments and property corners from damage. A land monument or property corner that is disturbed shall be restored according to Section 642 at the Contractor's expense. An undisturbed area five feet in diameter may be left around existing monuments and property corners. A list of land monuments and property corners is shown on the Right of Way maps.

201-4.01 METHOD OF MEASUREMENT. *Add the following*:

The work required for cutting, de-limbing, and stacking timber for public removal and to preserve and restore land monuments and property corners will be subsidiary to Pay Item 201(3B) Clearing and Grubbing.

SECTION 203

EXCAVATION AND EMBANKMENT

Special Provision

203-2.01 MATERIALS. Add the following to the end of item 3. Borrow: Borrow, Type B, will meet the requirements for Selected Material, Type B.

Add the following:
6. Borrow, Type II-A. See subsection 703-2.13

203-4.01 METHOD OF MEASUREMENT. *Add the following:* Borrow, Type B and Borrow, Type II-A quantities are calculated using neat line plus a 10% contingency. Contractor will be required to monitor depth (yield) and waste to not exceed the 10% contingency. Contractor will not be compensated over the amount listed unless work is added by a field directive and issued by the inspector.

203-5.01 BASIS OF PAYMENT.

If material is being paid by the cubic yard (compacted in place), truck count will be used during quantity disputes to determine cubic yards of material. Quantity per truck will be 15.0 cubic yards per belly dump or side dump, and 8.0 cubic yards per end dump. Trucks will meet capacity requirements and be fully loaded. Submittals for payment will include all truck tickets, a spreadsheet organizing the truck load count, and legal load data sheets for all trucks involved. Material maximum dry density (pounds per cubic foot) will be determined using the ASTM D1557 proctor method (corrected). The estimating factor for borrow is 144 pounds per cubic foot.

Add the following pay items:

Payment will be made under:

Pay Item No.	Pay Item	Pay Unit
203(6)	Borrow, Type B	Ton
203(19)	Borrow, Type II-A	Ton

SECTION 204

STRUCTURE EXCAVATION FOR CONDUITS AND MINOR STRUCTURES

Special Provisions

204-5.01 BASIS OF PAYMENT. *Delete the third paragraph and substitute the following:* When item 204(1), Structure Excavation, does not appear in the bid schedule, structure excavation required to complete other items of work is subsidiary except that excavation and disposal of unsuitable material required from below a plane 12 inches below the invert elevation of conduits and 12 inches below the bottom of structures will be paid for under pay item 203(1), Common Excavation.

Delete the fourth paragraph and substitute the following: Any backfill or bedding material required whose source is other than project excavation will be paid for at the contract price for pay item 203(6) Borrow, Type B.

SECTION 301

AGGREGATE BASE AND SURFACE COURSE

Special Provision

301-4.01 METHOD OF MEASUREMENT. *Add the following:* Aggregate Surface Course, Grading E-1 quantities are calculated using neat line plus a 10% contingency. Contractor will be required to monitor depth (yield) and waste to not exceed the 10% contingency. Contractor will not be compensated over the E-1 amount listed unless work is added by a field directive and issued by the inspector.

SECTION 602
STRUCTURAL PLATE PIPE

Special Provision

602-3.01 CONSTRUCTION REQUIREMENTS. *Add the following*:

It is the intent of this contract for the Contractor to procure the specified pipe sizes and assemble them with square ends. Each pipe must have enough overall length so that they can be cut to the specified skew angle after the reinforced concrete headwalls have cured.

The following construction sequence is general in nature and does not include specific backfill placement requirements. Assembly and backfill placement requirements shall be in strict accordance with manufacturer's instructions.

A manufacturer's representative shall attend a preconstruction conference and remain on site during backfill operations and structure shape monitoring.

Construction Work Plan

1) Construct and reroute stream through the diversion.
2) Locate dewatering sump(s) as necessary to minimize water in the excavation.
3) Excavate road and remove existing 9.5-foot diameter pipe.
4) Excavate as necessary to install new pipes to the lines and grades shown in the plan.
5) Excavate for headwall footings and place reinforcing steel in accordance with the plans. Vertical reinforcing elements will extend out of the footings for this first pour.
6) Pour footings and provide the step in the footings shown in the plan.
7) Place specified pipe bedding material as shown in the plan.
8) Assemble pipes in place or preassemble and set pipe sections in place on the lines and grades shown in the plans. Place reinforcing steel for the headwalls. Locate and drill holes in the pipe ends to attach anchor bolts.
9) Place form work as necessary for the concrete headwalls. Pour concrete headwalls.
10) After concrete has cured, cut all pipe ends flush with concrete headwalls.
11) Place stream substrate as shown in the plans.

Alternative construction work plans shall be presented to the Engineer for review and approval.

Add the following subsection:

602-3.02 DESIGN REQUIREMENTS.

Provide the LRFR and LFR load ratings for the structural plate pipes in accordance with the current Manual for Bridge Evaluation and the Alaska Bridge and Structures Manual prior to submission of shop drawings.

Provide the design computations for the structural plate pipes in accordance with the current AASHTO LRFD. Submit concurrent with load rating calculations. Calculation and shop drawings shall be stamped by a State of Alaska registered professional engineer.

Independent check calculations (by a second engineer) must be provided for the structural plate pipe-arch design and load ratings.

602-5.01 BASIS OF PAYMENT. *Add the following*:

All costs associated with the permitting, design, materials, construction, maintenance and removal of the temporary stream diversion is subsidiary.

Additional pipe length required to construct pipes square ended is subsidiary.

Engineering calculations for LRFR and LFR load ratings and structural plate pipe-arch design is subsidiary.

All work associated with transporting, assembly, and installing the culvert is subsidiary to this pay item.

Excavation, bedding, and backfill for pipes are paid under Section 203.

Payment will be made under:

Pay Item No.	Pay Item	Pay Unit
602(2A)	Structural Plate Pipe-Arch, 12’-10” span, 8’-4” rise, 12 gage	Linear Foot
602(2B)	Structural Plate Pipe-Arch, 18’-1” span, 11’-10” rise, 10 gage	Linear Foot

SECTION 615

STANDARD SIGNS

Special Provisions

615-3.01 CONSTRUCTION REQUIREMENTS. *Under item number 7, replace the 6th sentence with the following*: Deliver sign panels, post and hardware to the MSB Maintenance Yard in Palmer.

In the last sentence under item number 7, replace the word "Department" with "MSB."

SECTION 618

SEEDING

Special Provisions

618-1.01 DESCRIPTION. *Add the following*: Topsoil and seed new or disturbed slopes and other areas directed by the Engineer. Track the soil and apply seed, mulch, fertilizer, and water. Provide a living ground cover on slopes as soon as possible.

618-2.01 MATERIALS. *Add the following to the list of material specifications*:

Mulch subsection 727-2.01

618-3.01 SOIL PREPARATION. *Delete the fourth paragraph and replace with the following*:
Roughen the surface to be seeded by grooving the soil in a uniform pattern that is perpendicular to the fall of the slope. Use one or more of the following grooving methods with associated equipment before the application of seed:

1. Manual raking with landscaping rakes;
2. Mechanical track walking with track equipment; or
3. Mechanical raking with a scarifying slope board. Form one inch wide grooves spaced no more than six inches apart.

Rounding the top and bottom of slopes to facilitate tracking or raking and to create a pleasant appearance is acceptable, but disrupting drainage flow lines is not.

Add the following: Apply seed as detailed in subsection 618-3.03 immediately after the shaping of the slopes. Cover all slopes to be seeded with topsoil according to Section 620. Complete slope preparation as soon as topsoil is placed on the slopes.

618-3.02 SEEDING SEASONS. *Add the following*: Seed disturbed areas that require seeding within 14 days of the permanent cessation of ground disturbing activities in that area.

Seed between May 15 and August 15, or obtain written approval from the Engineer to seed at a different date.

618-3.03 APPLICATION. *Add the following*: Apply seed, mulch, and fertilizer as follows per MSF. Apply seed and mulch in one application if using the hydraulic method. Apply fertilizer by hand.

Component	Ingredients	Application Rate (per MSF)
Seed, Type A	"Sourdough" Bluejoint Reedgrass, Trade Name: "Arctic Mulch" Calamagrostis Canadensis	0.2 lbs.
	Annual Ryegrass Lolium Perenne Ssp. Multiflorum	0.8 lbs.
	Bering Hairgrass "Norcoast" Deschampsia Beringensis	3.0 lbs.
Total		4.0 lbs.
Soil Stabilizer Slope ≤ 3:1 Slope >3:1	Mulch Mulch with tackifier	46 lbs. 45-58 lbs.
Fertilizer	20-20-10	12.0 lbs.

Do not remove the required tags from the seed bags.

Upon the Engineer's approval, Nortran Tufted Hairgrass may be used as a substitute for Slender Wheatgrass (Wainwright) if Slender Wheatgrass (Wainwright) is commercially unavailable. If this substitution is made, apply at the same application rate.

Water and fertilizer required for application are subsidiary to the Contract Price.

Delete Subsection 618-3.04 in its entirety, and add the following new subsections:

618-3.04 MAINTENANCE AND WATERING. Protect seeded areas against traffic by approved warning signs or barricades. Repair surfaces gullied or otherwise damaged following seeding. Maintain seeded areas in a satisfactory condition until final acceptance of work.

Water and maintain seeded areas. If, in the opinion of the Engineer, too much water is being applied, reduce amount of water as directed.

Reseed areas not showing evidence of satisfactory growth within 3 weeks of seeding. Bare patches of soil more than 10 square feet in area must be reseeded. Erosion gullies over 4 inches deep must be filled and reseeded. Fill the entire erosion gully to surrounding grade, including the portions less than 4 inches deep.

Contact ADNR for advice or corrective measures, when seeded areas are not showing evidence of satisfactory growth. The Contractor is responsible for re-tracking, reseeding, re-fertilizing, and re-mulching areas that do not show satisfactory growth, and those actions are subsidiary.

618-3.05 ACCEPTANCE. During final inspection, the Engineer will perform a visual inspection of seeding to determine final stabilization. During the visual inspection, each station and each side of the road will be considered a separate area. The Engineer will accept seeding that has become a vegetative matt with 70% cover density in the inspection area.

Reseed areas that are not acceptable to the Engineer.

618-3.06 PERIOD OF ESTABLISHMENT. Establishment periods extend for one complete growing season following acceptable seeding. Employ all possible means to preserve/maintain the new vegetative matt in a healthy and vigorous condition to ensure successful establishment. Reseed areas that do not meet the specifications. Watering and reseeding after the final inspection are subsidiary to the Contract Price.

The Engineer may, but is not required to, determine the Project is complete except for the period of establishment, and issue a letter of final acceptance. After final acceptance, work or materials due under this subsection during any remaining period of establishment are considered warranty obligations that continue to be due following final acceptance in accordance with subsection 105-1.16.

618-4.01 METHOD OF MEASUREMENT.

Add the following: The quantity of seeding shall include all cultivation, seeding, limestone, if required, fertilizer, mulching, and watering.

Delete paragraph beginning: "Water for Seeding" and replace with:

Water for Seeding. This item will not be measured for payment. Water for seeding is subsidiary to Item 618(2A) Seeding, Type A

618-5.01 BASIS OF PAYMENT. *Delete paragraphs beginning*: "Seeding by the Acre" *and* "Seeding by the Pound" *and replace with*:

Seeding by the Acre. Payment is for established vegetative mat. Soil preparation, fertilizer, mulching (if required), water required for hydraulic method, and water applied for growth of vegetative mat are subsidiary.

Seeding by the Pound. Payment is for established vegetative mat. Soil preparation, fertilizer, mulching (if required), water required for hydraulic method, and water applied for growth of vegetative mat are subsidiary.

Add the following:

Pay Item No.	Pay Item	Pay Unit
618(2A)	Seeding, Type A	Pound

Replace Section 639 with the following:

SECTION 639

DRIVEWAYS

639-1.01 DESCRIPTION. Construct approaches, residential or commercial driveways at the locations shown in the Plans.

639-2.01 MATERIALS. Use materials that conform to the standards for the main roadway.

639-3.01 CONSTRUCTION. Construct driveways and approaches to the dimensions shown on the Plans.

639-4.01 METHOD OF MEASUREMENT. By the number of driveways and approaches constructed as shown on the Plans or as directed. Pavement removal and excavation required beyond the limits of the adjacent mainline will be subsidiary.

639-5.01 BASIS OF PAYMENT. At the contract unit price shown in the bid schedule. The contract unit price for driveways and approaches shall be full compensation for furnishing equipment and labor necessary to complete the work as specified.

Materials required to construct driveways and approaches will be paid for separately under the respective items listed in the bid schedule.

Payment will be made under:

Pay Item No.	Pay Item	Pay Unit
639(1)	Residence Driveway	Each
639(2)	Commercial Driveway	Each
639(3)	Public Approach	Each

SECTION 641

EROSION SEDIMENT AND POLLUTION CONTROL

Standard Modifications

Delete Section 641 in its entirety and substitute the following:

641-1.01 DESCRIPTION. As approved by the Engineer, provide project administration and construction activities to control erosion, sedimentation, and pollution from the Project, according to this section and applicable local, state and federal requirements, including the Construction General Permit.

Utilities will be relocated by others concurrently with construction of this project. The Contractor will be responsible for controlling sediment and erosion and stabilizing areas disturbed during underground and aboveground utility relocation.

The Borough will develop a Storm Water Pollution Prevention Plan (SWPPP) necessary to cover certain utility relocation work that may precede issuance of a Notice to Proceed. The Contractor will incorporate the provisions of that SWPPP document into any documents prepared by the Contractor under this Section.

641-1.02 DEFINITIONS.

Alaska Certified Erosion and Sediment Control Lead (AK-CESCL). Certification documenting the person has completed training, testing and other requirements recognized by the Borough to satisfy the APDES Construction General Permit for "qualified personnel". AK-CESCL certificates issued in conformance with, and under authority of the AK-CESCL Memorandum of Understanding are recognized by the Borough as meeting this standard. An AK-CESCL certification must be recertified every three years. CPESC, Certified Professional in Erosion and Sediment Control: CISEC, Certified Inspector in Sediment and Erosion Control; and CESCL, Washington Department of Ecology Certified Erosion and Sediment Control Lead are the only other recognized substitution for the AK-CESCL certification.

Alaska Department of Conservation (ADEC). The State Department that has been authorized to administer the Clean Water Act's National Pollutant Discharge Elimination System in a phased process.

Alaska Pollutant Discharge Elimination System (APDES). The Alaska Pollutant Discharge Elimination System, administered by ADEC.

Area of Land Disturbance. The area of land (soil) that will be disturbed by Construction Activity. Area of Land Disturbance does not include pavement removal or pavement milling if the activity does not remove aggregate underlying the pavement.

Best Management Practices (BMPs). Temporary or permanent structure and non structural devices, schedules of activities, prohibition of practices, maintenance procedures and other management practices to prevent or reduce the discharge of pollutants to waters of the United States. BMPs also include but are not limited to, treatment requirements, operating procedures, and practices to control plant site runoff, spillage or leaks, sludge or waste disposal.

Clean Water Act (CWA). United States Federal Water Pollution Control Act (33 U.S.C. 1251 et seq.)

Construction Activity. Physical activity by the Contractor or any Subcontractor or Utility Company that may result in land disturbance, erosion, sedimentation, or a discharge of pollutants in storm water. Construction activity includes, but is not limited to, grubbing, excavation, constructing embankment, grading, stockpiling erodible material, processing material and installation or maintenance of BMP's.

Construction General Permit (CGP). The Alaska Pollutant Discharge Elimination System General Permit for Discharges from Large and Small Construction Activities.

Electronic Notice of Intent (eNOI). The Electronic Notice of Intent submitted to ADEC, to begin Construction Activities under the CGP.

Electronic Notice of Termination (eNOT). The Electronic Notice of Termination submitted to ADEC, to end coverage under the CGP.

Erosion and Sediment Control Plan (ESCP). A project-specific document that illustrates measures to control erosion and sediment problems on a project. The ESCP normally consists of a general narrative and a map or site plan. It is developed by the Borough and may be included in the project plans and specifications. It serves as a resource for bid estimation and a frame work from which the Contractor develops the project SWPPP.

Final Stabilization. Soil disturbing activities at the site have been completed and one of the following methods, as identified in the contract, has been completed:

- Establish a uniform and evenly distributed perennial vegetative cover with a density of 70 percent of the native background vegetative cover, or
- Construct non-erodible permanent stabilization measures (such as riprap, gabions, geotextiles, pavement, or crushed aggregate base course) where vegetative cover is not required or practical.

Hazardous Material Control Plan (HMCP). The Contractor's detailed project-specific plan for the prevention of pollution from storage, use, transfer, containment, cleanup, and disposal of hazardous material, including but not limited to, petroleum products related to construction activities and equipment. The HMCP is included as an appendix to the SWPPP.

Operator(s). The party or co-parties associated with a regulated activity that has responsibility to obtain storm water permit coverage. "Operator" for the purpose of CGP and in context of stormwater associated with construction activity, means any party associated with a construction project that meets either of the following two criteria:

1. The party has operational control over construction plans and specifications, including the ability to make modifications to those plans and specifications; or
2. The party has day to day operational control of those activities at a project which are necessary to ensure compliance with a SWPPP for the site or other permit conditions (e.g. they are authorized to direct workers at a site to carry out activities required by the SWPPP or comply with permit conditions).

Pollutant. Any substance or item meeting the definition of pollutant contained in 40 CFR 122.2

Project Area. The physical limits of the construction site, Borough furnished project staging and equipment areas, Borough furnished haul routes where deposition of sediments or erodible materials may result from material hauling activities and Borough furnished material and disposal sites directly related to the Contract. The project area also includes all areas of utility relocation and installation, including adjacent utility easements and tie-ins that may extend beyond the defined project limits. Contractor or Commercial Operator furnished material sites material processing sites, disposal sites, haul routes, staging areas and equipment storage are not included in the Project Area.

Spill Prevention, Control, and Countermeasure Plan (SPCC). The Contractor's detailed plan for petroleum spill prevention and control measures that meet the requirements of 40 CFR 112.

Storm Water Pollution Prevention Plan (SWPPP). The Contractor's detailed project -specific plan to minimize erosion and contain sediment within the Project site and to prevent discharge of pollutants that exceed applicable water quality standards. The SWPPP includes, but may not be limited to, amendments, records of activities, inspection schedules and reports, qualifications of key personnel and all other documentation required by the CGP and this specification.

Temporary Stabilization. The protection of exposed soils (disturbed land) from wind, and water erosion during construction process, until final stabilization is established.

Utility Company. A Utility Company or their contractor performing work concurrently with the construction of this project.

641-1.03 SUBMITTALS. Submit three signed copies of the SWPPP and HMCP to the Engineer. Submit two signed copies of the SPCC Plan (if required under subsection 641-2.03) to the Engineer at or before the pre-construction meeting.

The Borough will review the SWPPP and HMCP submittals within fourteen (14) calendar days. Submittals will be returned to the Contractor as either requiring modification, or as approved by the Borough. The 14 day review period will restart when the Contractor submits to the Borough the revised SWPPP and or HMCP. The approved SWPPP must contain certification, and be signed according to the Standard Permit Conditions of the APDES Construction General Permit.

Upon acceptance of the SWPPP by the Borough submit an eNOI for the Project to ADEC with the required fee. Submit a copy of the eNOI to the Project Manager when the eNOI is submitted to ADEC. The Borough will submit the Borough's eNOI to the ADEC and provide a copy to the Contractor for inclusion in the SWPPP.

No construction activities will take place on the Project until the eNOI has been posted on the ADEC website for seven (7) calendar days.

The active status NOI's, SWPPP, HMCP and SPCC Plan (when required) become the basis of the work required for the project's erosion, sediment, and pollution control.

Within fifteen (15) calendar days after the Engineer has determined you may end SWPPP activities for the Project, submit your eNOT for the Project to ADEC and send a copy of the eNOT to the Engineer. Within fifteen (15) calendar days of the Project Manager's determination the Borough will submit the Borough's eNOT to the ADEC and send a copy to the Contractor.

When CGP, Part 10, F requires ADEC SWPPP review: transmit a copy of the SWPPP with the required fee to ADEC using delivery receipt confirmation. Transmit a copy of the delivery receipt confirmation to the Engineer within seven (7) calendar days of receiving the confirmation. Transmit a copy of the ADEC SWPPP review letter to the Project Engineer within seven (7) calendar days of receipt from ADEC. Amend the SWPPP as necessary to address ADEC comments and transmit a copy of the SWPPP amendments to the Engineer within seven (7) calendar days of receipt of ADEC review comments. Include a copy of the ADEC SWPPP review letter in the SWPPP.

641-1.04 PERSONNEL QUALIFICATIONS. The Superintendent and any designated Relief Superintendent must meet the following qualifications:

- Current certification as AK-CESCL
- Duly authorized representative, as defined in Appendix F of the CGP.

641-1.05 SIGNATURE/CERTIFICATION REQUIREMENTS AND DELEGATIONS.

<u>eNOI and eNOT.</u> The eNOI and eNOT must be signed and certified by a responsible corporate officer, in accordance with the CGP Appendix F. Signature and certification authority, for eNOI and eNOT, cannot be delegated.

<u>Delegation of Signature Authority for Other SWPPP Documents and Reports.</u> Delegate signature and certification authority to the Superintendent, in accordance with CGP Appendix F, for the SWPPP inspections, and other reports required by the CGP. Include a copy of the written delegation in the SWPPP. Delegation is not required if the Superintendent is a responsible corporate officer for the Contractor, as defined in CGP Appendix F.

Subcontractor Certification. Subcontractors must certify that they have read and will abide by the CGP and the conditions of the project SWPPP.

641-2.01 STORM WATER POLLUTION PREVENTION PLAN. Prepare a Storm Water Pollution Prevention Plan. When provided in the plan set use the Borough's ESCP to develop a SWPPP based on scheduling, equipment, and use of alternative BMPs. The SWPPP preparer must visit the project site before preparing the SWPPP. The plan must include both erosion control and sediment control measures. The plan must first address preventing erosion, then minimizing erosion and finally trapping sediment before it leaves the project site.

The SWPPP must follow the format presented in Appendix A, of Developing Your Storm Water Pollution Prevention Plan (EPA 833-R-060-04 May 2007). An electronic copy of the SWPPP template is available on EPA's web site at http://www.epa.gov/npdes/swpppguide

The plan must address the site specific controls and management plan for the construction site as well as for material sites, waste disposal sites, haul roads and other affected areas, public or private. The plan must also include copies of and incorporate the requirements of the project permits.

The contractor is responsible for identifying, in their SWPPP, other work that is on-going or will be undertaken within or adjacent to the project during the contract period and to coordinate erosion and sediment control measures with the other operators.

641-2.02 HAZARDOUS MATERIAL CONTROL PLAN (HMCP) REQUIREMENTS.
Prepare a HMCP for handling, storage, cleanup and disposal of petroleum products and other hazardous substances. (See 40 CFR 117 and 302 for listing of hazardous materials).

Compile Material Safety Data Sheets in one location and reference in the HMCP. List and give location of hazardous materials, including office materials, to be used and/or stored on site, and estimated quantities. Detail a plan for storing these materials as well as disposing of waste petroleum products and other hazardous materials generated by the project.

Identify the locations where storage, fueling and maintenance activities will take place, describe the maintenance activities and list controls to prevent the accidental spillage of oil, petroleum products, and other hazardous materials.

Detail procedures for containment and cleanup of hazardous substances, including a list of types and quantities of equipment and materials available on site to be used.

Detail a plan for the prevention, containment, cleanup and disposal of soil and water contaminated by accidental spills. Detail a plan for dealing with unexpected contaminated soil and water encountered during construction.

Detail methods of disposing of waste petroleum products and other hazardous materials generated by the project. Identify haul methods and final disposal areas. Assure final disposal areas are permitted for hazardous material disposal.

Specify the line of authority and designate a field representative for spill response and one representative for each subcontractor. Include their names and contact information in the SWPPP.

641-2.03 SPILL PREVENTION, CONTROL AND COUNTERMEASURE (SPCC) PLAN REQUIREMENTS.

Control

Prepare and implement a SPCC Plan when required by 40 CFR 112, including:
1. When oil spills may reach navigable waters; and
2. Total above ground oil storage capacity is greater than 1,320 gallons.

Prevention and Countermeasures

Comply with 40 CFR 112 and address the following issues in the SPCC Plan:

1. Operating procedures that prevent oil spills;
2. Control measures installed to prevent a spill from reaching navigable waters; and
3. Countermeasures to contain, cleanup and mitigate the effects of an oil spill.

Self-certify the SPCC Plan if the total above ground oil storage capacity is 10,000 gallons or less, and the requirements for self certification in 40 CFR 112 are met. Otherwise the SPCC Plan must be certified, stamped with the seal of, date by, and signed by a Professional Engineer registered in the State of Alaska.

641-2.04 RESPONSIBILITIES AND AUTHORITY OF THE SUPERINTENDENT.
The Superintendent is responsible for the overall operations of the Project and all Contractor-furnished sites and facilities directly related to the Project. The Superintendent shall sign and certify the SWPPP, SWPPP inspections, and other reports required by the CGP, except the NOI and NOT. The Superintendent may not delegate the task or responsibility of signing and certifying the SWPPP, SWPPP inspections, and other reports required by the CGP. If the Superintendent is unavailable, a relief Superintendent may sign and certify reports required by the CGP. If the relief Superintendent is used, document the personnel change, including a photo copy of their AK-CESCL certification, and include their beginning and ending dates in the SWPPP.

641–2.05 MATERIALS. Comply with the material requirements described in the Plans and Specifications.

Use materials suitable to withstand hydraulic, wind, and soil forces, and to control erosion and trap sediments in accordance with the requirements of the CGP.

Straw that is certified as free of noxious weed by the United States Department of Agriculture, Natural Resources Conservation Service, Local Soil and Water Conservation District, Alaska Weed Free Forage Certification Program must be used when available. Hay may not be substituted for straw.

Silt fences	Subsection 729-2.04, Sediment Control
Temporary Seed	Section 724
Erosion, Sediment, and Pollution Control-Material	Section 744

641-3.01 CONSTRUCTION REQUIREMENTS. Comply with the SWPPP and the requirements of the CGP.

Ensure all subcontractors and utility companies understand and comply with the SWPPP and the CGP. Provide SWPPP information to the utility companies. Notify the Project Manager immediately if actions of any utility company or subcontractor do not comply with the SWPPP and the CGP. Provide training to subcontractors & utility companies on control measures at the site and applicable storm water pollution prevention procedures and document the dates and attendees to these trainings in Appendix J of the SWPPP.

Post notices on the outside wall of the Contractor's project office, and at publicly accessible locations near the beginning and end of the Project. Protect postings from the weather and locate so the public can read them without obstructing construction activities (for example, at an existing pullout). Include the following information in each of the posted notices:

- Copy of all eNOIs related to this project
- Name and phone number of Project Superintendent
- Location of the SWPPP available for public viewing.

Comply with requirements of the HMCP, the submitted SPCC Plan, and the State and Federal regulations that pertain to handling, storage, cleanup and disposal of petroleum products or other hazardous substances. Contain, cleanup and dispose of discharges of petroleum products and other materials hazardous to the land, air, water and organic life forms. Perform fueling operations in a safe and environmentally responsible manner. Comply with requirements of 18 AAC 75 and AS 46, Oil and Hazardous Substance Pollution Control. Report oil spills as required by Federal, State and local Law and, as described in the SPCC Plan.

Comply with requirements of the APDES Construction General Permit, implement temporary and permanent erosion and sediment control measures identified in the SWPPP, and ensure that the SWPPP remains current. Maintain temporary and permanent erosion and sediment control measures in effective operating condition.

Coordinate BMPs with Utility Companies doing work in the project area.

641-3.02 INSPECTIONS

Perform inspections and prepare inspection reports to comply with the project SWPPP and the APDES Construction General Permit.

1. Joint Inspections. Before start of construction, conduct a joint on-site inspection with the Engineer, the SWPPP Preparer, and the Contractor's Superintendent for the project to discuss the implementation of the SWPPP.

    a. Before each winter shutdown, to ensure that the site has been adequately stabilized and devices are functional.

    b. At project completion, to ensure final stabilization of the project.

2. During Construction. In addition, the Contractor will perform inspections meeting the requirements of the ADPES Construction General Permit. The project Superintendent shall review the Project Site, Materials Sites, Waste Sites and the SWPPP for conformance with the APDES Construction General permit at least once per month and after every major change in earth disturbing activities for compliance with the Construction General Permit.

3. Inspection Reports. Prepare and submit, within three (3) working days of each inspection, a Inspection Report. At a minimum the report will contain the following:

    a. A summary of the scope of the inspection
    b. Name(s) and titles of personnel making the inspection
    c. The date of the inspection
    d. Observations relating to the implementation of the SWPPP
    e. Any actions taken as the result of the inspection
    f. Incidents of non-compliance

Where a report does not identify and incidents of noncompliance, certify that the facility is in compliance with the SWPPP and the APDES Construction General Permit.

The Contractor's Superintendent will sign the report according to the Standard Permit Conditions of the APDES Construction General Permit. Include reports as an appendix to the SWPPP.

Record Retention

Keep the SWPPP up to date at all times. The SWPPP shall denote location, date of installation, date maintenance was performed and the date of removal of BMPs. It shall also contain copies of inspection reports and amendments.

Maintain the following records as part of the SWPPP:

1. Dates when major grading activities occur;
2. Dates when construction activities temporary or permanently cease on a portion of the site: and
3. Dates when stabilization measures are initiated.

Provide the Engineer with copies of SWPPP revisions, updates, records and inspection reports at least weekly.

Retain copies of the SWPPP and other records required by the APDES Construction General Permit for at least three years from the date of final stabilization.

If unanticipated or emergency conditions threaten water quality, take immediate suitable action to preclude erosion and pollution.

Amendments

Submit amendments to the SWPPP to correct problems identified as a result of:

1. Storm or other circumstance that threatens water quality, and
2. Inspection that identifies existing or potential problems.

Submit SWPPP amendments to the Engineer within seven (7) calendar days following the storm or inspection. Detail additional emergency measures required and taken, to include additional or modified measures. If modifications to existing measures are necessary, complete the implementation before the next storm event whenever practicable.

Stabilize area disturbed before the seeding deadline or within seven (7) calendar days of the temporary or permanent cessation of ground-disturbing activities.

Notice of Termination

For projects that require an eNOI, submit the signed eNOT to the ADEC with a copy to the Project Manager when the Project Manager notifies that:

1. The project site (including material sources, and disposal sites) has been finally stabilized and that storm water discharges from construction activities authorized by the permit have ceased, or
2. The construction activity operator (as defined in the APDES Construction General Permit) has changed.

641-4.01 METHOD OF MEASUREMENT.

Items 641(2) and (4) will be measured as specified in the Contract or Owner's Action authorizing the work.

641-5.01 BASIS OF PAYMENT.

1. Item 641(1) Erosion and Pollution Control Administration. At the Contract lump sum price for administration of work under this Section. Includes, but is not limited to, plan preparation, plan amendments and updates, inspections, monitoring, reporting and record-keeping.

2. Item 641(2) Temporary Erosion and Pollution Control. At the prices specified in the Contract or as provided in the Owner's action authorizing the work to install and maintain temporary erosion, sedimentation and pollution control measures.

3. Item 641(3) Temporary Erosion and Pollution Control. At the Contract lump sum price to install and, maintain temporary erosion, sedimentation and pollution control measures required to complete the project according to the Plan and with the current approved SWPPP and HMCP.

4. Item 641 (4) Temporary Erosion and Pollution Control Amendments. At the price specified in the Owner's action for extra, additional or unanticipated work to install and maintain temporary erosion, sedimentation and pollution control measures. Work paid under this item will be shown as amendments to the original SWPPP or HMCP.

Temporary erosion and pollution control measures that are required at Contractor -furnished sites are subsidiary to Pay Item 641(3).

Work that is paid for directly or indirectly under other pay items will not be measured and paid under this Section, including but not limited to dewatering, shoring, bailing, installation and removal of temporary work pads, temporary accesses, temporary drainage pipes and structures and diversion channels.

Perform temporary erosion and pollution control measures that are required due to negligence, carelessness, or failure to install permanent controls as a part of the work scheduled or ordered by the Project Manager, or for the Contractor's convenience, at the Contractor's expense.

Permanent erosion and pollution control measures will be measured and paid for under other Contract items, when shown on the bid schedule.

Failure

If the Contractor fails to coordinate temporary or permanent stabilization measures with the earthwork operations in a manner to effectively control erosion and prevent water pollution, the Project Manager may suspend the earthwork operations and withhold monies due on current estimates for such earthwork items until aspects of the work are coordinated in a satisfactory manner.
If there is failure to:

1. Pursue the work required by the SWPPP,
2. Respond to inspection recommendations and/or deficiencies in the SWPPP, or
3. Implement erosion and sedimentation controls identified by the Project Manager.

The Project Manager may suspend construction activities and withhold monies due on current estimates until the SWPPP is in compliance with the APDES Construction General Permit.

The Contractor shall be due no additional monies or Contract time extension as result of delays resulting from suspension of earthwork for failure to perform required erosion, sedimentation, or pollution duties as outlined in this Section 641.

If listed in the bid schedule payment will be made under:

Pay Item No.	Pay Item	Pay Unit
641(1)	Erosion and Pollution Control Administration	Lump Sum
641(2)	Temporary Erosion and Pollution Control	Contingent Sum
641(3)	Temporary Erosion and Pollution Control	Lump Sum
641(4)	Temporary Erosion and Pollution Control Amendments	Contingent Sum

SECTION 642

CONSTRUCTION SURVEYING

Standard Modifications

Delete Section 642 in its entirety and substitute the following:

642-1.01 GENERAL. Perform surveying and staking essential for the completion of the project and perform the necessary calculations required to accomplish the work in conformance with the Plans and Specifications and standard engineering and surveying practice.

Finish and install survey monuments and monument cases in conformance with the Plans or as directed.

Adjust existing monuments and monument cases to conform to the new elevations.

642–1.02 DEFINITIONS.

1. Monument: A fixed physical object marking a point on the surface of the earth, used to commence or control a survey; mark the boundaries of a parcel of land; or the centerline of right-of-way corridor. Monuments will be Primary or Secondary, as shown on the plans.

2. Surveyor: The Contractor's Professional Land Surveyor, currently registered in the State of Alaska.

642–2.01 MATERIALS.

1. Monument Cases: Use castings meeting AASHTO M 105, Class No. 30A. Coat castings with a bituminous dam-proof coating. Use tops that bear evenly on the frames.

2. Primary Monument: A minimum 2-inch diameter nonferrous pipe at least 30 inches long, with a minimum 4-inch flange at the bottom and having magnets attached at the top and bottom. A minimum 2-3/8 inch diameter nonferrous metal cap must be permanently attached to the top. Permanently stamp every monument with the Surveyor's registration number, the point/corner identification.

3. Secondary Monument: A minimum 5/8 inch rebar with a 2-inch aluminum cap attached to the top. Permanently stamp every secondary monument with the Surveyor's registration number, the point/corner identification.

642–3.01 GENERAL. Use competent, qualified personnel and suitable equipment for the layout work required and furnish traffic control, stakes, templates, straight-edges and other devices necessary for establishing, checking and maintaining the required points, lines and grades.

The owner found existing monuments and set additional control sufficient to establish the project centerline and set at least two benchmarks per mile to enable establishment of planned elevations. The survey control for this project is shown on the Plans.

The contractor will perform the following:

1. Staking necessary to delineate clearing and/ or grubbing limits.

2. Slope Staking.

3. Staking of signs, culverts, minor drainage structures and other appurtenances, including the necessary checking to establish the proper location and grade to best fit the conditions on site.

4. Set centerline finishing stakes (hubs)

5. All other surveying and staking necessary to complete the project.

642-3.03 MONUMENTS. Any monuments disturbed on the project will be replaced by the Contractor's Surveyor. The Surveyor must complete and stamp a State of Alaska Land Surveyor Monument Record form for each primary and secondary monument removed, installed, relocated, or replaced. Provide the required survey information on the form in accordance with statutory requirements, including section, township, and range. Meet requirements for recording at the District Recorder's Office in which the project is located for each monument record. Deliver conforming copies of the recorded forms to the Engineer before monument removal or disturbance and after setting any final monuments requiring monument records.

Set each monument and monument case accurately to lines established at the required location and in a manner as to ensure being held firmly in place. Set existing monuments and monument cases to be adjusted to new elevations in the manner and at the elevations directed.

642-4.01 METHOD OF MEASUREMENT.

Item 642(1) Construction Surveying. No measurement of quantities will be made.

Item 642(2) Two Person Survey. By the hour, as directed by the Engineer, for any additional or unanticipated work made necessary by changes in the project.

642-5.01 BASIS OF PAYMENT. Construction Surveying includes field and office work required to accomplish the work, including furnishing necessary personnel, equipment, transportation and supplies.

Traffic control devices necessary for the survey parties are considered subsidiary to Pay Item 642(1).

Survey monuments placed on bridges are subsidiary.

Payment will be made under:

Pay Item No.	Pay Item	Pay Unit
642(1)	Construction Surveying	Lump Sum
642(2)	Two Person Survey Party	Hour

SECTION 643

TRAFFIC MAINTENANCE

Standard Modifications

643-1.01 DESCRIPTION. *Add the following:*

This work consists of the necessary measures to protect and control traffic during the life of the contract including but not limited to, furnishing, erecting, maintaining, replacing, cleaning, moving and removing the traffic control devices required to insure the safety of the traveling public and all administrative responsibilities necessary to implement this work. The Contractor shall be liable for any damage or injuries suffered by reasons of their operations or their failure to provide adequate safeguarding services.

DEFINITIONS. *Add the following:*

Permanent Construction Signs. Signing installed at the start of construction activities and located on the primary approaches to the work zone to warn drivers of upcoming construction activities and to advise drivers that they have reached the end of the construction zone. These signs may include signs setting speed limits through the construction zone and/or warning of increased penalty for excessive speed in the construction zone.

Detour. An alternate route taking drivers around a road closure or other obstacle normally delineated by specific signing notifying the driver when the detour must be taken and guiding the driver through the alternate route.

643-1.03 TRAFFIC CONTROL PLAN. *Add the following:* A Traffic Control Plan (TCP) is a drawing or drawings indicating the method or scheme for safely guiding and protecting motorists, pedestrians, bicyclists, and workers in a traffic control zone. It depicts the traffic control devices to be used, their placement and times of use.

The Contractor shall submit Traffic Control Plans at the Preconstruction Conference that has been prepared by an ATSSA Traffic Control Supervisor for typical situations that will be encountered during the project. The Contractor shall designate a person responsible for implementing and maintaining the Contractor's Traffic Control Plan. The Engineer shall be the final approving authority for any TCP actually implemented.

There shall be no work within the project limits until the Contractor has implemented an approved TCP for the work proposed. The number of traffic control devices indicated on the TCP's and Standard Drawings are a minimum. If unsafe conditions occur, the Engineer may require additional traffic control devices.

643 – 2.01 MATERIALS. No. 16, Flagger Paddles, *replace last sentence with:*

Use reflective sheeting that meets AASHTO M268, Type VIII, or IX. Use background colors of fluorescent orange on one side and red on the other side.

643-3.01 GENERAL CONSTRUCTION REQUIREMENTS. *Add the following:* The Contractor shall maintain continuous, safe and convenient traffic flow along all roads impacted by the construction activities. Traffic control devices and services shall be provided and maintained both inside and outside the project limits both day and night as needed to facilitate traffic guidance.

Unless otherwise directed, the Contractor shall keep all roadways undergoing improvement open to traffic. Temporary closure of residential, commercial or street approaches requires prior approval of the Engineer. The Contractor shall provide access through the project for emergency vehicles and school buses. All locations requiring redirection or stopping of the traveling public shall be properly signed and/or flagged by the Contractor.

The Contractor's equipment shall stop at all points of intersection with the traveling public unless satisfactory traffic control measures, are shown on the approved TCP or approved by the Engineer.

Immediately notify the Engineer of traffic related accident(s) that occur(s) inside the project limits as soon as becoming aware of the accident(s).

643-3.04 TRAFFIC CONTROL DEVICES. *Delete the first paragraph and substitute the following:*
Prior to the start of construction operations on any portion of the project, the Contractor shall erect permanent and temporary traffic control devices as may be required by the approved TCPs or as directed by the Engineer. Traffic control devices shall be used only when needed. Advisory speeds, when necessary, shall be determined by the Engineer. All traffic control devices used by the Contractor shall conform to the requirements as specified in the current edition of the Alaska Traffic Manual (ATM) and shall be placed as shown on the plans or as directed by the Engineer.

During non-working hours and following the completion of a portion of the project, all unnecessary traffic control devices shall be removed or covered.

The Contractor shall provide flagging for traffic control when needed for safety of the traveling public. Each Flagging operation shall be approved by the Engineer prior to its implementation and shall be adjusted as conditions change or as directed by the Engineer. Flagging shall include the furnishing of trained competent flaggers and all necessary equipment for control of traffic through the work zone, including two-way radio communications between flaggers when flaggers are not in plain view of each other. Flaggers shall maintain their assigned posts at all times, unless relieved by another qualified flagger or the need for flagging traffic no longer exists. Flagger signs are to be removed when a flagger is not present.

In the sixth paragraph replace: “ATTSA” with: “ATSSA”

Add the following to No. 1 Embankments: Close trenches and excavations at the end of each continuous work shift, except as indicated by the Project manager.

Add the following to No. 3 Fixed Objects: Remove obstructions greater than 4 inches above the nominal foreslope grade at the end of continuous work shift.

Delete No. 4.b and replace with: Flagger Certification by ATSSA.

Delete No. 6 and replace with:

6. Street Sweeping and Power Brooming. Keep free of loose material paved portions of the roadway and haul routes open to the public, including sections of the roadway off the project where the Contractor’s operations have deposited loose material. Use equipment for brooming and sweeping as recommended by the manufacturer and the following:

Dirt, dust and construction materials, mobilized as a result of power brooming and or sweeping, shall not be pushed, ejected, thrown or drift beyond the lesser of, 2 feet from the equipment perimeter or the edge of the paved surface.

All equipment shall operate to typical industry standards. Maintain equipment to operate as designed by the manufacturer. Equipment will employ safety equipment, warning lights, and other as required by the Specifications and these Special Provisions.

Sweeper and Broom Options:

a. Regenerative Sweeper: Sweeper that blows stream of air at the paved surface causing fine particles to rise and be caught through a vacuum system.

b. Vacuum Sweeper: Sweeper that creates a vacuum at the paved surface sucking dirt, dust and debris into the collection system.

c. Mechanical Broom Sweeper: Sweeper designed to pick up and collect larger size road debris, stones and litter, ect. In addition to the requirements noted in these specifications, use of a mechanical broom sweeper requires the Project Manager to approve the sweeper for the intended use.

d. Power Broom: Power brooming that wets, pushes and or ejects loose material directly into an attached collection/pickup container may be used when approved by the Engineer. The added moisture will be contained to the paved roadway surface.

7. Watering. *Replace the first sentence with the following*: "Furnish, haul and place water for dust control and pavement flushing at a minimum of once a day in dry conditions, and as directed."

Dry Power Brooming is not permitted. Power brooming without direct/immediate means of collection/pickup is not permitted.

Payment for Street Sweeping and Power Brooming is subsidiary to Pay Item 643(1).

643-3.05. AUTHORITY OF THE ENGINEER. *Add the following:* The Engineer may suspend construction operations if safety procedures and/or traffic controls are inadequate. The inadequate conditions shall be corrected by the Contractor before being allowed to resume operations. In no case shall this time exceed 24 hours.

643-3.08 CONSTRUCTION SEQUENCING. *Replace the last sentence in the first paragraph with:*

Unless otherwise determined by the Engineer and on an approved Traffic Control Plan (TCP), do not restrict traffic during the times listed below.

1. Monday through Friday: 1900 hours to 0700 hours (Do not restrict traffic – corresponding to 7 AM to 7 PM work schedule)

3. Around any Holiday:
   a. If a holiday falls on Sunday, Monday or Tuesday the above stipulations apply from 1200 hours on the Friday before the holiday to 0300 hours on the day after the Holiday.

   b. If a holiday falls on Wednesday, the above stipulations apply from 1200 hours on the Tuesday before the holiday to 0300 hours on the Thursday after the holiday.

   c. If the holiday falls on Thursday, Friday or Saturday, the above stipulations apply from 1200 hours on the day before the holiday to 0300 hours on the Monday after the holiday.

Obtain the local school bus schedule and coordinate work efforts to ensure the school buses are not delayed through the construction zone. This plan shall be submitted, as a TCP to the Engineer for approval before implementation of school bus coordination plan.

643-3.11 HIGH VISIBILITY CLOTHING. Ensure workers inside project limits wear an outer visible surface of layer that complies with the following requirements:

1. Standards. Use high visibility garments conforming to the requirements of ANSI/ISEA 107-2004, Class 2 for tops or Class E for bottoms, and level 2 retroreflective material.

2. Labeling. Use garments labeled in conformance with Section 11.2 of ANSI/ISEA 107-2004.

3. Tops. Wear high visibility vests, jackets, or coverall tops at all times.

4. Bottoms. Wear high visibility pants or coverall bottoms during nighttime work (sunset to sunrise). Worksite traffic supervisors, employees assigned to traffic control duties, and flaggers wear high visibility pants or coverall bottoms at all times.

5. Outer Raingear. Wear raingear tops and bottoms conforming to requirements in this Subsection. 643-3.11.

6. Exceptions. When workers are inside an enclosed compartment of a vehicle, they are not required to wear high visibility clothing.

7. Condition. Furnish and maintain vests, jackets, coveralls, rain gear, hard hats, and other apparel in a neat, clean, and presentable condition. Maintain retroreflextive material to Level 2 standards.

Payment for high visibility garments for workers is subsidiary to Pay Item 643(3).

643-4.01 METHOD OF MEASUREMENT. *Delete and add the following:*

1. Traffic Maintenance will be lump sum and shall include preparation of TCPs, and all labor, materials, traffic control devices and equipment required to implement the Traffic Control Plans as specified and as directed.

2. Permanent Construction Signs will be lump sum and shall include furnishing and installing the necessary advance warning signs including special construction signs such as street names or distance signs and sign posts.

643-5.01 BASIS OF PAYMENT. *Delete and add the following:*

1. Traffic Maintenance. The contract price includes all resources required to provide the Worksite Traffic Supervisor, all required TCPs and public notices, the Construction Phasing Plan, and the maintenance of all roadways, approaches, crossings, intersections and pedestrian and bicycle facilities, as required. This item also includes any Traffic Control Devices required but not shown on the bid schedule.

   Items required by the Contract that are not listed on the bid schedule or not included in other items are subsidiary to Item 643(1), Traffic maintenance.

2. Permanent Construction Signs. The contract price includes all resources to provide the necessary advance warning signs including special construction signs such as street names or distance signs and sign posts.

Payment will be made under:

Pay Item No.	Pay Item	Pay Unit
643(1)	Traffic Maintenance	Lump Sum
643(2)	Permanent Construction Signing	Lump Sum

SECTION 671

STREAM SIMULATION

Special Provision

Add the following Section:

671-1.01 DESCRIPTION

The work under this Section consists of performing all operations pertaining to the construction of the simulation stream channel and streambanks using stream substrate and stream armor materials, random rock features, coir logs, root wads, brush layering, live willow staking and salvaged vegetative mat.

Construction of the stream channel consists of furnishing and installing wood debris, rood wads, vegetation, rock and specified culvert infill material to simulate natural stream profile, grade control structures, and stream bed through culverts and in existing and reconstructed stream channels. Works includes developing, transporting, and storing materials; sediment control; placing bedding and fill to construct stream simulation channels inside and outside of the structures (culverts, existing channels); placing, keying, and compacting designed culvert infill material; reconstructing existing channels and banks; and all other work to complete the project.

Location of reconstructed channel and banks is shown in the Drawings. The Contractor is advised to review this plan and submit any changes to the Engineer in writing before implementing a modified plan.

Refer to “Stream Bank Revegetation and Protection: A Guide for Alaska”, published by the Alaskan Department of Fish and Game and available online or in hard copy, for technique descriptions and visual aides.

671-2.01 MATERIALS

Contractor shall be responsible for obtaining, mobilizing, operating, and maintaining all materials and equipment necessary to complete the technique, including machinery, materials, sediment & erosion control, pumping facilities, and the like. All materials costs are incidental to section 671 pay items.

Stream Substrate.

Stream Substrate materials shall meet the gradation requirements in section 703. Submit material gradations to engineer for approval prior to transporting materials. Stream Substrate material shall be inspected and approved by the engineer prior to placement.

Coir Logs.

The contractor will provide coir logs consisting of interwoven coconut fibers bound with biodegradable netting of the diameter shown in the Drawings. Excavate shallow trench to place log ensuring contact with soil along entire length of logs. Bury at least 2/3 of the log diameter into the native soil or substrate material. Secure logs in place using wooden stakes spaced no more than 3 feet. Wooden stakes shall be driven at least 2 feet into soil. Use minimum 2” x 2” wooden stakes.

Willow Cuttings.

The Contractor will provide live willow cuttings to be used for brush layering and live staking as shown in the Drawings. Contractor is responsible for procuring, storing and handling willow cuttings. Provide dormant “Feltleaf” variety willow cuttings that are ½ to 2 inches in diameter and at least 3 to 4 feet long. Collect cuttings during winter/early spring before leaves appear, preferably before March 31.

Store willow cuttings in bundles of approximately 50 to 100 each. Maintain willows in dormant state until time of planting. Willow cuttings must be stored at a temperature between 31°F and 40°F until planted and must be soaked in water for at least 24 hours prior to planting, but not more than 48 hours. Use plants free from disease, injurious insects, mechanical wounds, broken branches, decay or other defects. Contractor is responsible for replacing willow stakes that are damaged or die due to negligence or mishandling at the Contractor's expense.

At least 10 working days before digging operations, furnish complete and detailed information about the supply source for each item of plant materials. Final inspection and acceptance for size, absence of defects, and for other requirements will be made at the planting site upon delivery before placing the cuttings in their permanent positions.

Willows must be planted by July 15. Refer to pages 16 and 17 of the "Streambank Revegetation and Protection" guide.

671- 3.01 CONSTRUCTION REQUIREMENTS

Maintain equipment utilized in and around streams in a clean and orderly fashion. Immediately repair any fluid or fuel leaks. To the greatest extent possible, remove all contaminated material from the site and dispose of in accordance with all State and Federal laws. An oil spill containment kit is required on the job site when working in and around the stream. At a minimum, the kit shall include tarps and oil-absorbent pads.

Base equipment selection on the minimum size necessary to perform the work and minimize the impacts to the adjacent banks and streambed. Submit a list of equipment anticipated to be used for the job to the Engineer prior to commencing construction activities.

Do not drive metal track or rubber tired equipment directly on metal structure surfaces. Place a 12-inch layer of stream substrate material on the structure bottom before operating metal track or rubber tired equipment directly on metal structure surfaces.

671-3.02 EXCAVATION

Excavate according to Section 203 Common Excavation. Control excavated material to minimize disturbance to the adjacent channel and banks. Incorporate salvaged streambed materials into the project if required gradations are in accordance with the Drawings and Specifications or directed by the Engineer.

Specific culvert installation time restrictions and installation plan requirements are indicated in the Contract Documents (reference Scope of Work).

671-3.03 CONSTRUCTION

Construct stream channel and banks as specified in the Drawings, including the use of stream substrate, stream armor, random rock features, root wads, coir log, brush layering, live willow staking and vegetative mat. The salvage, transport, stockpiling and placement of native soil and topsoil, vegetative mats, trees, root wads, rock and in-stream materials shall be completed in agreement with these specifications and as shown on the Drawings. All disturbances resulting from construction of the new channel shall be contained by appropriate erosion and sediment control devices.

Construct banks before placing the stream materials in the reconstructed channel. Construct bank faces to be uneven, protrude into the channel, and rough in appearance. Construct the top of the bank to be fairly uniform and matching the existing surrounding grade. Tie back constructed banks and margins at the edge of the structure walls into the existing streambanks at dimensions similar to those found in the field or as shown in the Drawings.

Root Wad Bank Construction

Construct the root wad banks in the following sequence. Refer to pages 70 through 73 in the "Streambank Revegetation and Protection" guide.

Note that placement of root wads is intended as a replacement for the root mass of live trees removed due to excavation for culvert placement. Under no circumstance should live mature trees be removed solely for the placement of root wad protection.

1. Install root wad by excavating into the stream bank deep enough to accommodate a 10 foot long tree bole.

2. Excavate streambed where designated for bank construction in the Drawings so that root fans can be partially buried 2 to 3 feet. Take care to minimize disturbance to adjacent vegetative mat and existing stabilized stream bank adjacent to work area.

3. Place bole into excavated bank so that bole is angled slightly downward from the streambed, perpendicular to stream flow, with fans facing slightly upstream to the bank. Center of bole should be approximately at ordinary high water, with top of bole at approximate bankfull elevation. Place boles in parallel so that boles are no more than 3 feet apart and adjacent root fans overlap a minimum of 3 feet.

4. Place Stream Substrate material around and behind root wads as shown in Drawings.

5. Place header log (minimum diameter 8 inches) perpendicular to boles near end of trunk adjacent to the fan. Drive #6 rebar dowels through header log and each bole so that dowel extends at least through the bole. At end of header log, overlap adjacent stringer log onto the same bole so that root wads are connected as a single unit.

6. Use Stream Substrate material to tie constructed stream bank into existing stabilized stream bank at the upstream and downstream ends of the project.

7. Backfill with Stream Substrate material, filling gaps between stringer logs and boles. Cover Stream Substrate material with biodegradable fabric as shown on drawings. Fabrics shall be C700BN and C125BN BioNet by North American Green or equal.

8. Place brush layer behind header log. Backfill and compact as shown on drawings. Place topsoil and seed. Cover slope with biodegradable fabric, Eronet SC150 by North American Green, or equal.

9. Plant live willow stakes after biodegradable fabric has been placed punching holes in fabric if needed.

10. Prepare several live stakes from one dormant cutting. Cut stakes 10 to 24 inches long and roughly 1/2 to 2 inches in diameter. Discard flower buds. Each stake requires at least one or two leaf buds near the top of the live stake.

11. Use rebar or similar to create a planting hole for longer live stakes.

12. Plant stakes upright 2 feet apart. Plant stakes as vertically as possible, placing at least 3/4 of the stake below ground so that only one or two leaf buds are left exposed above ground.

13. Tightly pack the soil around the stake so no air pockets remain.

14. All disturbed ground not fully covered with vegetative mats shall be reseeded in accordance with Section 618 Seeding.

Brush Layering

Construct the brush layering in the following sequence. Refer to pages 44 through 49 in the “Streambank Revegetation and Protection” guide.

1. Install erosion control measures to the satisfaction of Engineer.

2. Create a stable foundation using stream substrate materials.

3. Lay out one layer of coarse mesh biodegradable fabric and overlay one layer of fine mesh biodegradable fabric on the foundation. Fabrics shall be C700BN and C125BN BioNet by North American Green or equal. Then fill fabric with clean gravel to specified thickness, roll the two fabric layers back and secure fabric with wooden stakes. Wooden stakes shall be constructed from diagonally ripped 2x4 lumber and embedded at least 12 inches. Place dormant willow cuttings on top of the fabric roll. Make sure that cut ends of willow branches are placed to the back of the roll area. Plant tips or shoots should be pointing out into the creek channel as shown on the Drawings. Expose no more than one-quarter of the total branch length.

4. Place willows in a crisscross pattern. Place 15 willow cuttings per foot of prepared area. Reference pages 44 to 49 in the “Streambank Revegetation Techniques for Alaska” guide.

5. Repeat steps 3 (except use 50% topsoil/50% native soil mixture inside the fiber roll) and 4 until the desired bank elevation is reached.

6. Place 50% topsoil/ 50% native soil mixture over willows and then place vegetative mat on top of the willows as shown in the Drawings. Vegetative mat should be from the immediate area and as intact as possible. Vegetative mat should be at least 9 inches thick.

Stream Channel and Culvert Infills

Place culvert infill material in one or more layers with a layer depth less than 1 ½ times the maximum dimension of the stream simulation rock, but no greater than 2 feet. Place culvert infill material by methods that do not cause segregation or damage to the prepared surface. Proper placement shall achieve a uniformly dense, compact, low permeability mass, matching natural stream bed details. Fill all voids left during placement by using water pressure and metal hand tamping rods to force material into all surfaces and subsurface voids between the structure and rocks, and between individual rocks. Water should pool on the surface once sufficient density has been reached. Contractor shall demonstrate that the streambed has achieved low permeability for the Engineers approval prior to rewatering the culvert or the constructed channel. Add more material in areas of subsidence to bring finished grade to elevation shown on the plans. Construct low flow channel as shown in the Drawings. Leave surface of streambed as rough as observed in the adjacent, natural channel.

671-4.01 METHOD OF MEASUREMENT

Brush Layering will be paid for by linear foot of bank construction as indicated on the Drawings or as directed by the Engineer.

Root Wad Installation will be paid for by linear foot of bank construction as indicated on the Drawings or as directed by the Engineer.

Excavation of reusable materials and rock is paid under Section 203(1) Common Excavation.

Other materials necessary for completion of work as specified in this section, including biodegradable fabric, biodegradable twine, wood stakes, soil/gravel mix, and miscellaneous materials are subsidiary and will not be measured for payment.

671-4.01 BASIS OF PAYMENT

Stream simulation items including the procurement, transportation, and placement of material within the structure, reconstructed channel reaches and stream banks will be paid under the following pay items. Excavation, backfill, and disposal of all unsuitable and surplus material not covered under other pay items are subsidiary to these pay items.

Payment will be made under the following items:

Pay Item No.	Pay Item	Pay Unit
671(1)	Root Wad Installation	Linear Foot
671(2)	Brush Layering	Linear Foot
671(3)	Stream Substrate	Cubic Yard

SECTION 672

STREAM DIVERSION & DEWATERING

Special Provision

672-1.01 DESCRIPTION. The Work under this Section consists of performing all operations pertaining to the dewatering of Work areas or diversion of surface and subsurface water flows for excavation and backfill during construction operations.

672-1.02 GENERAL. A recommended Stream Diversion Plan has been provided in Drawings. The provided Stream Diversion Plan is intended to convey general concepts and locations are approximate. The Contractor can adjust the locations of bulk bags (Super Sacks), coffer dams, temporary culverts, diversion channels, detour roads, and related items as need to fit field conditions. The Contractor is recommended to review this plan and submit any changes to the Engineer in writing before implementing a modified plan. Divert and dewater per Permits.

Notify the Alaska Department of Fish and Game (ADFG) and the Engineer a minimum of 48 hours before diverting stream flows into the diversion channel/culvert or as required by Permits. Notify ADFG and the Engineer a minimum of 24 hours before introducing stream flows into the completed culvert and channel.

672-2.01 MATERIALS. Contractor shall be responsible for obtaining, mobilizing, operating, and maintaining all materials and equipment necessary to complete dewatering operations, including machinery, culverts, bulk bags, sandbags, hoses, pumping facilities, piping, and the like. All materials costs are incidental to Item 672(1) Stream Diversion & Dewatering.

672-3.01 CONSTRUCTION. Comply with construction design, installation, and operation of dewatering systems with current safety and environmental regulations. Work must be performed in dry conditions. Minimize disturbance of undisturbed ground. Engineer must approve placement of pads for dewatering equipment.

672-3.02 DEWATERING. Acceptance of Contractor's Stream Diversion Plan by the Engineer does not relieve Contractor of responsibility for the exercise of reasonable precaution, prudent construction practices, overloading or misuse of existing or new structures, the adequacy and safety of such works, and potential damage or undermining of existing or completed works.

Obtain permits from ADF&G to relocate fish. Relocate fish contained within the coffer/diversion dams before the site is completely dewatered. Place relocated fish in the closest pool upstream of the construction area. If trash pumps are used for stream diversion, the intake must be operated and maintained to prevent fish entrapment, entrainment, or injury with the use of perforated or slotted plate and woven wire with a mesh size not greater than 3/32 inch or a profile bar and wedgewire with openings not greater than 1/16 inch. Approach velocities shall not exceed a passive velocity of 0.2 feet per second (fps) or an active velocity 0.4 fps.

Water resulting from Contractor's dewatering effort may not be pumped or otherwise diverted into creeks unless required permits, including, but not limited to, ADNR, ADEC and the U.S. Environmental Protection Agency, are obtained. Under no circumstances will the Contractor be allowed to divert water from the excavation onto roadways. Contractor is to provide a disposal site for excess water and will be responsible for approval and maintaining dewatering in accordance with all necessary permits.

Maintain the dewatering pumping operations to ensure return flow does not exceed State of Alaska water quality standards. Water pumped from the construction site may require additional filtration by filter fabrics or other methods to prevent turbid water from directly entering the stream. Turbid water pumped from the work site for the purpose of lowering the water table in the trench during culvert installation and stream channel reconstruction shall be discharged at least 100 feet from stream flows, except when performing rewatering procedures described in the next subsection.

672-3.03 REWATERING. Conduct rewatering activities to minimize sediment movement downstream of the site upon completion of in-stream work. Prior to re-diverting full stream flows to reconstructed channel (including culvert), wet the channel to wash fines into stream bed. Slowly wet the channel through use of pumps. Provide means for collecting sediment and turbid water at downstream end of reconstructed channel. Capture and pump turbid water from downstream end of channel back to upstream end of channel until fines are washed into stream bed and water runs clear as determined by the Engineer. After the initial sediment pulse is removed, slowly breach the coffer/diversion dams to avoid a large pulse of water being sent through the newly constructed channel.

672-4.01 METHOD OF MEASUREMENT. Section 109.

Temporary culverts, pumps, hoses, stilling basins, sandbags, bulk bags (e.g., Super Sacks), plastic liners, temporary rock and riprap, and other materials will not be measured for payment.

672-5.01 BASIS OF PAYMENT. At the contract lump sum price for administration of all work.

All materials, equipment and labor necessary to complete the scope of work as specified under this section and not paid for under other items on the bid schedule, including temporary culverts, pumps, hoses, stilling basins, sandbags, bulk bags (e.g., Super Sacks), plastic liners, temporary rock and riprap, are subsidiary to Item 672(1), Stream Diversion & Dewatering.

Payment will be made under:

Pay Item No.	Pay Item	Pay Unit
672(1)	Stream Diversion & Dewatering	Lump Sum

SECTION 703

AGGREGATES

Special Provisions

703-2.03 AGGREGATE FOR BASE AND SURFACE COURSE.

Replace the first sentence with the following:
For MSB E-1 screened stone or screened gravel, consisting of sound, tough, durable pebbles or rock fragments of uniform quality.

Delete Table 703-2 and substitute the following:

TABLE 703-2
AGGREGATE FOR UNTREATED BASE
(Percent Passing By Weight)

Sieve Designation	Grading C-1	Grading D-1	Grading E-1
1 ½ inch	100	-	100
1 inch	70-100	100	-
3/4 inch	60-90	70-100	70-100
3/8 inch	45-75	50-80	50-85
No. 4	30-60	35-65	35-75
No. 8	22-52	20-50	20-60
No. 30	10-33	10-26	-
No. 50	6-30	6-30	15-30
No. 200	0-6	0-6	7-13

Add the following subsection:.
703-2.13 BORROW, TYPE II-A. Material shall contain no lumps, frozen material, organic matter, or other deleterious matter, and shall be durable and sound. Meet the following gradation:

TYPE II-A

U.S. Std. Sieve	Cumulative % Passing by Weight
3”	100
¾”	50-100
#4	25-60
#10	15-50
#40	4-30
#200	2-6

In addition to the grading limits listed above, the fraction of material passing the #200 sieve shall not be greater than twenty percent (20%) of that fraction passing the #4 sieve.

Add the following subsection:.

703-2.17 STREAM SUBSTRATE. Stream substrate material shall consist of the following material proportions for the associated material gradations. Contractor may use salvaged stream bed material that meet the gradation with the Engineer's approval. Add fines (No.10 and smaller) to seal the bed

MATERIAL PROPORTIONS	
CLASS	% BY WEIGHT
CUSTOM COARSE 1	50%
CUSTOM COARSE 2	40%
FINE AGGREGATE	10%

CUSTOM COARSE 1	
SIEVE	% PASSING
12"	100%
10"	90%
8"	80%
5"	50%
3"	20%

CUSTOM COURSE 2	
SIEVE	% PASSING
5"	100%
3"	90%
1 ½"	60%
¾"	40%
#4	20%

FINE AGGREGATE	
SIEVE	% PASSING
1 ½"	100%
¾"	90%
#4	80%
#10	75%

SECTION 724

SEED

Special Provision

724-2.02 MATERIALS.

Delete Table 724-1 and replace with the following:

TABLE 724-1
SEED REQUIREMENTS

Species	Sproutable Seed, %, Min.
Arctared Red Fescue	78
Egan American Sloughgrass	67
Norcoast Bering Hairgrass	71
Nortran Tufted Hairgrass	71
Wainwright Slender Wheatgrass	88
Alyeska Polargrass	71
Bluejoint	71
Tilesy Sagebrush	71
Tundra Glaucous Bluegrass	76
Gruening Alpine Bluegrass	72
Nugget Kentucky Bluegrass	76
Beach Wildrye	70
Annual Ryegrass	76
Perennial Ryegrass	76

*Sproutable Seed is the mathematical product of Germination and Purity.

SECTION 726

TOPSOIL

Special Provision

Delete Subsection 726-2.01, except for Table 726-1 and replace with the following:

726-2.01 TOPSOIL. Furnish topsoil that is representative of the existing, natural organic blanket of the project area. Perform a quality test, as defined by ATM 203, on the soil to determine the organic content of the soil. Supply the results to the Engineer.

Soil with an organic content of 5 percent or more may be reused and spread on the finished slopes where topsoil is noted on the plans. Remove roots, stumps, unnatural material, and rocks greater than 3 inch in diameter from the organic material before it is graded onto the finished slope.

Soil with an organic content of less than 5 percent cannot be used as topsoil for the project. In this case furnish topsoil consisting of a natural friable surface soil without admixtures of undesirable subsoil, refuse or foreign materials having an organic content of 5 percent or more, as determined by ATM 203. The material shall be reasonably free from roots, clods, hard clay, rocks greater than 3 inches in diameter, noxious weeds, tall grass, brush, sticks, stubble or other litter, and shall be free draining and nontoxic. Notify the Engineer of the topsoil source location at least 30 calendar days before delivery of topsoil to the project from the identified location. The Engineer will inspect the topsoil and its sources before approval will be granted for its use.

Special Provision

SECTION 727
SOIL STABILIZATION MATERIAL

Delete subsection 727-2.01 in it's entirety and add the following:

727-2.01 MULCH. Mulch material will be Verdyol Biotic Earth Black with Earthbound Scientific Soil Stabilizer. Mulch will be stored, applied and maintained per the manufacturer's recommendations: http://bioticearth.com/

Add the following section:

SECTION 800

INTERIM WORK AUTHORIZATION

Special Provisions

800-1.01 DESCRIPTION. Directive needed to continue work flow on extra work within the original scope of work negotiated between the owner's representative and the contractor, additions to quantities listed in the current bid schedule with the contract agreed unit prices, and value engineering brought forth to the owner that is in the benefit of the borough.

800-2.01 MATERIALS. Directives are agreements from the field inspector to the contractor that identify changes and additions of work necessary to complete the job.

800-3.01 GENERAL. This item is to help facilitate payment of changes before the change orders are complete through the borough system.

800-4.01 METHOD OF MEASUREMENT. Section 109 and the following:
1. Contingent Sum. Authorized additions of existing unit prices items, agreed lump sum amounts, and possible addition of items not on the current bid schedule with agreed fair unit prices.

800-5.01 BASIS OF PAYMENT.

Payment will be made under:

Pay Item No.	Pay Item	Pay Unit
800(1)	Interim Work Authorization	Contingent Sum

BID #20-095B

SECTION IV

BID FORM

BID FORM
BID #20-095B
MARBLE WAY FISH PASSAGE

Having carefully examined the Project Plans and Specifications and all Bidding and Contract Documents as listed in the "Table of Contents" and in compliance with the "Invitation for Bids", the undersigned hereby proposes to furnish all materials, labor, equipment, and supervision necessary to complete the **MARBLE WAY FISH PASSAGE** project for the Matanuska-Susitna Borough in full accordance with the Bidding Documents.

The bidder shall insert a Unit Price and an Extended Price (where applicable) opposite each Pay Item that appears in the Schedule. Contract award will be made to the responsive and responsible bidder with the lowest Total Bid Amount. All erasures, strike-through, white-out and/or corrections made on this form must be initialed.

Item Number	Work Description	Pay Unit	Estimated Quantities	Unit Price	Extended Price
201(3B)	Clearing	Lump Sum	All Required		$
202(1)	Removal of structures & obstructions	Lump Sum	All Required		$
202(4)	Removal of culvert pipe	Linear Foot	94	$	$
203(1)	Common excavation	Cubic Yard	4,672	$	$
203(6)	Borrow, Type B	Ton	1,649	$	$
203(19)	Borrow, Type II-A	Ton	4,773	$	$
301(3)	Aggregate surface course, grading E-1	Ton	339	$	$
501(1)	Class A concrete	Lump Sum	All Required		$
602(2A)	Structural plate pipe-arch 12'-10" span x 8'-4" rise, 12 gage	Linear Foot	70	$	$
602(2B)	Structural plate pipe-arch 18'-1" span x 11'-10" rise, 10 gage	Linear Foot	70	$	$
603(1-12)	12-inch CSP	Linear Foot	106	$	$
606(1)	W-beam guardrail	Linear Foot	188	$	$
606(6)	Removing and disposing of guardrail	Linear Foot	100	$	$
606(11)	Extruder terminal (ET-2000)	Each	4	$	$
615(2)	Remove & relocate existing sign	Each	7	$	$
615(6)	Salvage sign	Each	6	$	$

_____ _____
Signature Date

_____
Company Name

BID FORM CONTINUED ON THE FOLLOWING TWO PAGES

BID FORM (CONTINUED)
BID #20-089B
RIDGECREST ROAD IMPROVEMENTS

Item Number	Work Description	Pay Unit	Estimated Quantities	Unit Price	Extended Price
618(2A)	Seeding, Type A	Pound	61	$	$
620(1)	Topsoil	Square Yard	1,700	$	$
639(1)	Residence driveway	Each	3	$	$
640(1)	Mobilization & demobilization	Lump Sum	All Required		$
641(1)	Erosion & pollution control administration	Lump Sum	All Required		$
641(3)	Temporary erosion & pollution control	Lump Sum	All Required		$
642(1)	Construction surveying	Lump Sum	All Required		$
642(3B)	Two person survey party	Hour	5	$	$
643(1)	Traffic Maintenance	Lump Sum	All Required		$
643(2)	Permanent construction signing	Lump Sum	All Required		$
671(1)	Rootwad installation	Linear Foot	40	$	$
671(2)	Brush layering	Linear Foot	60	$	$
671(3)	Stream substrate	Cubic Yard	401	$	$
672(1)	Stream diversion & dewatering	Lump Sum	All Required		$
800(1)	Interim work authorization	Contingent Sum	All Required		$10,000.00
				TOTAL BID AMOUNT	**$**

_____ _____
Signature Date

_____
Company Name

BID FORM CONTINUED ON THE FOLLOWING PAGE

BID FORM (CONTINUED)
BID #20-095B
MARBLE WAY FISH PASSAGE

By signing below, the Bidder is hereby certifying to the following:

1. The Bidder has carefully examined the bid document(s) and agrees to perform all specified services for the sum(s) provided above.
2. The individual signing below, or the firm association or corporation of which they are a member, has not, either directly or indirectly, entered into any agreement, participated in any collusion, or otherwise taken any action in restraint of free competitive bidding in connection with this solicitation.
3. The individual signing below is authorized by the firm association or corporation to bind such association or corporation to a legal contract.
4. The individual signing below, or the firm association or corporation of which they are a member, is not debarred or suspended from doing business with the Matanuska-Susitna Borough.
5. The individual signing below, or the firm, association or corporation of which they are a member, does not violate the conflict of interest provisions contained in 2 CFR 200.318.
6. They are acknowledging receipt of the following Addenda Numbers (if no addenda have been issued, either leave blank or write "N/A"):

Addenda numbers being acknowledged: _____

_____ Company Name	_____ Date
_____ Mailing Address	_____ Signature
_____ City, State and Zip Code	_____ Printed (or typed) Name
_____ Contact Person (printed or typed)	_____ Title (printed or typed)
_____ Phone Number	_____ Email Address (Contact Person)
_____ Facsimile Number	_____ State and Specialty License Numbers

It shall be the responsibility of the Bidder to see that their bid is received before the date and time fixed for opening.	To be considered responsive, Bidders should include the following with their bid: ✓ Signed Bid Form (acknowledging Addenda if applicable) ✓ Bid Guarantee (if required) ✓ Attachment 4, Lobbying Certification ✓ Attachment 5, Debarment Certification ✓ Other Items required in Instructions to Bidders & Specifications/Scope of Work

BID #20-095B

SECTION V

SAMPLE AGREEMENT

CONSTRUCTION AGREEMENT

BETWEEN OWNER AND CONTRACTOR

Bid #20-095B

MARBLE WAY FISH PASSAGE

SAMPLE

THIS AGREEMENT is made this _____ day of _____, 20_____, by and between:

MATANUSKA-SUSITNA BOROUGH (hereinafter the "BOROUGH") and

SELECTED CONTRACTOR (hereinafter the "CONTRACTOR")

The parties agree as follows:

SECTION 1. WORK. The Contractor will do all work described in the Agreement documents listed in Section 11. The work is more specifically identified as:

Realign and upgrade Marble Way and improve the fish passage on Cottonwood Creek. This project will involve, but is not limited to, clearing, grubbing, excavation, import and placement of borrow material, import and placement of aggregate surface course, installing structural plate pipe-arches with concrete headwalls, installing guardrail and placing topsoil and seed.

SECTION 2. AGREEMENT TERM. This Agreement shall begin upon execution of this Agreement by both parties and shall expire upon completion of all duties by the Contractor to the satisfaction of the Contracting Officer.

SECTION 3. AGREEMENT TIME. The work shall begin no later than ten days after a Notice to Proceed is issued by the Contracting Officer. Work shall be performed in one continuous time period after utility relocations are completed. All in-water work below Ordinary High Water shall be completed by July 15, 2020 and per Fish Habitat Permit 18-IV-0363. Final Completion shall be achieved by September 15, 2020.

SECTION 4. AGREEMENT PRICE. The Borough shall pay the Contractor a total sum of **ENTER TOTAL DOLLAR AMOUNT IN WORDS (WRITE DOLLAR AMOUNT IN FIGURES IN PARENS)** for the work specified in the Agreement documents.

SECTION 5. METHOD OF PAYMENT. A single sum on short-term Agreements (30 days or less) and monthly payments on long-term Agreements (31 days or longer) shall be paid to the Contractor within thirty (30) working days after the Contracting Officer receives and approves a written Request for Payment from the Contractor. A copy of all certified payrolls submitted to the state of Alaska must precede or accompany any payment requests. Final payment will not be made until the Contractor has completed and submitted to the contracting officer a Contractor's Release and Affidavit of Payment of Debts and Claims, and submitted the Department of Labor Notice of Completion with final payment request. **Consent of Surety to Final Payment must also be submitted if applicable.**

SECTION 6. RELATIONSHIP OF THE PARTIES. The Contractor shall perform all obligations under this Agreement as an independent Contractor of the Borough. The Borough will administer this Agreement and monitor the Contractor's performance within the Agreement but shall not supervise or otherwise direct the Contractor except as provided in this Agreement.

SECTION 7. ASSIGNMENTS AND SUBCONTRACTORS. The Contractor may not assign any interest in the Agreement to another person, nor delegate any duties to a subcontractor or other person without the prior written approval of the Contracting Officer. Any attempt by the Contractor to assign any interest or delegate duties under this Agreement shall give the Borough the right to immediately terminate this Agreement without any liability for work performed subsequent to termination.

SECTION 8. WARRANTY. The Contractor expressly warrants that all materials used will be of the best quality locally available and that all workmanship will meet the highest standards of the trade. The Contractor guarantees to answer personally for all materials and workmanship supplied to the Borough and shall undertake to correct workmanship or defect in materials found by the Contracting Officer, or his delegate.

SECTION 9. DEFENSE AND INDEMNIFICATION.

A. The Contractor shall indemnify, defend, and hold and save the Borough, its elected and appointed officers, agents and employees, harmless from any and all claims, demands, suits, or liability of any nature, kind or character, including costs, expenses, and attorney fees. The Contractor shall be responsible under this clause for any and all legal actions or claims of any character resulting from injuries, death, economic loss, damages, violation of statutes, ordinances, constitutions or other laws, rules or regulations, contractual claims, or any other kind of loss, tangible or sustained by any person, or property arising from Contractor's or Contractor's Officers, agents, employees, partners, attorneys, suppliers, and subcontractor's performance or failure to perform this Agreement in any way whatsoever. This defense and indemnification responsibility includes claims alleging acts or omissions by the Borough or its agents which are said to have contributed to the losses, failure, violations, or damage. However, Contractor shall not be responsible for any damages or claim arising from the sole negligence or willful misconduct of the Borough, its agents, or employees.

B. If any portion of this clause is voided by law or court of competent jurisdiction, the remainder of the clause should remain enforceable.

SECTION 10. TERMINATION. This Agreement may be terminated by the Borough:

A. if the Contractor fails to perform any obligation under this Agreement; or

B. for any reason upon ten days written notice to the Contractor; or

C. under Section 7 of this Agreement.

Upon termination of this Agreement, the Borough shall pay the Contractor for all work completed to the satisfaction of the Contracting Officer as of the date termination is effective.

SECTION 11. AGREEMENT DOCUMENTS AND INTEGRATION.

A. This Agreement and those documents and appendices incorporated by reference by "B" of this section shall constitute the entire Agreement of the parties. There are no promises, terms, conditions, or obligations other than those stated in this Agreement and its appendices, and this Agreement shall supersede all previous communications, representations, or agreements, either oral or written, between the parties.

B. The following documents are incorporated in full text or by reference into this Agreement:

FULL TEXT	**REFERENCE**
Exhibit A - Bid Form	Matanuska-Susitna Borough License
Exhibit B - Scope of Work/Specifications	State of Alaska Business License
Exhibit C - Addendum(a) Issued	Contractor's License
Exhibit D - Certificate of Insurance	State of AK DOT Standard Specifications for Highway Construction – 2017 edition
Exhibit E - Payment & Performance Bonds	Bid #20-095B - Solicitation documents and attachments
Exhibit F - State of Alaska Department of Labor Forms and Publications	

SECTION 12. MODIFICATIONS. The Borough may require modifications in the Scope of Work performed or other terms of this Agreement. It is expressly understood that no changes will be authorized without the written and signed consent of the Contractor and the Borough Purchasing Officer or Borough Manager. All such changes shall be in the form of a Change Order and shall be incorporated into this Agreement.

SECTION 13. EQUAL EMPLOYMENT OPPORTUNITY.

A. The Contractor will not discriminate against any employee or applicant for employment because of race, color, religion, sex, national origin, physical handicap, age, status as a disabled veteran, or veteran of the Vietnam war era. The Contractor shall take affirmative action to ensure that applicants are employed and that employees are treated during employment without regard to their race, color, religion, sex, national origin, physical handicap, age, status as a disabled veteran, or veteran of the Vietnam war era. Such actions shall include, but not be limited to the following: employment, upgrading, demotions, or transfers; recruitment or recruitment advertising; layoffs or terminations; rates of pay or other forms of compensation; selection for training, including apprenticeship; and participation in recreational and educational activities. The Contractor agrees to post in conspicuous places available for employees and applicants for employment, notices to be provided setting forth the provisions of this nondiscrimination clause. The Contractor will, in all solicitations or advertisements for employees placed by or on behalf of the Contractor, state that all qualified applicants will receive consideration for employment without regard to race, color, religion, sex, national origin, physical handicap, age, or status as a disabled veteran, or veteran of the Vietnam war era. The Contractor will cause the foregoing provisions to be inserted in all subcontracts for any work covered by this Agreement. The Contractor shall keep such records and submit such reports concerning the equal opportunity employment provisions set forth in this section for applicants for employment and employees as the Borough may require.

B. The Contractor shall keep such records and submit such reports concerning the racial and ethnic origin of applicants for employment and employees as the Borough may require.

SECTION 14. INTEREST OF MEMBERS OF BOROUGH AND OTHERS. No officer, member, or employee of the Borough, and no member of its governing body, and no other public official of the governing body, shall participate in any decision relating to this Agreement which affects his personal interest or the interest of any corporation, partnership or association in which he is, directly or indirectly, interested or having any personal or pecuniary interest, direct or indirect, in this Agreement or the proceeds thereof.

SECTION 15. CONFLICT OF INTEREST. The Contractor, all employees of the Contractor, contractors and other personnel employed by the Contractor providing the services under this Agreement shall in no way stand to gain financially from the terms of this Agreement except for wages, salaries or bonuses paid by the Contractor and shall abide by federal, state, and local laws and regulations associated with conflict of interest and financial disclosure. The Contractor covenants, that he presently has no interest and shall not acquire any interest, direct or indirect, which would conflict in any manner or degree with the performance of services required to be performed under this Agreement. The Contractor further covenants that in the performance of this Agreement, no person having any such interest shall be employed.

SECTION 16. AUDITS AND INSPECTIONS. At any time during normal business hours and as often as the Borough or the Comptroller General of the United States may deem necessary, there shall be made available for examination all of the Contractor's records with respect to all matters covered by this Agreement and the Contractor will permit representatives of the Borough or the Comptroller General to audit, examine, and make excerpts or transcripts from such records, and to make audits of all contracts, invoices, materials, payrolls, records, personnel information, conditions of employment, and other data relating to all matters covered by this Agreement.

SECTION 17. JURISDICTION; CHOICE OF LAW. Any civil action arising from this Agreement shall be brought in the Superior Court for the Third Judicial District of the state of Alaska at Palmer. The law of the state of Alaska shall govern the rights and obligations of the parties.

SECTION 18. NON-WAIVER. The failure of the Borough at any time to enforce a provision of this Agreement shall in no way constitute a waiver of the provisions, nor in any way effect the validity of this Agreement or any part thereof, or the right of the Borough thereafter to enforce each and every protection hereof.

SECTION 19. PERMITS, LAWS AND TAXES. The Contractor shall acquire and maintain in good standing all permits, licenses and other entitlements necessary to its performance under this Agreement. All actions taken by the Contractor under this Agreement shall comply with all applicable statutes, ordinances, rules and regulations. The Contractor shall pay all taxes pertaining to its performance under this Agreement.

SECTION 20. SEVERABILITY. If any provision of the Agreement or the application thereof to any person or circumstances is held invalid, the remainder of this Agreement and its application to other persons or circumstances shall not be affected thereby.

SECTION 21. RULE OF INTERPRETATION. This Agreement shall not be interpreted for or against either party, but shall be interpreted according to its fair and reasonable intent.

SECTION 22. NOTICES. Any notice required pertaining to the subject matter of the Agreement shall be personally delivered or mailed by prepaid first-class, registered or certified mail to the following address:

Borough: 350 East Dahlia Avenue, Palmer, Alaska 99645

Contractor: (Insert Contractor's address here)

SECTION 23. INSURANCE.

It is specifically agreed between the parties executing this Agreement that it is not intended by any of the provisions of the Agreement to create in the public or any member thereof a third party benefit hereunder, or to authorize anyone not a party to this Agreement to maintain a suit for personal injuries or property damage pursuant to the terms or provisions of this Agreement.

It is highly recommended that the Contractor confer with their respective insurance companies or brokers to determine if their insurance program complies with the Borough's Insurance requirements.

The Contractor shall procure and maintain the following insurances:

A. Minimum Scope of Insurance

Coverage shall be at least as broad as:

1. Insurance Services office form number CG 0001 (Edition 10/01) covering Commercial General Liability.
2. Insurance Services office form number CA 0001 (Edition 10/99) covering Automobile Liability, symbol 1 "any auto".
3. Worker's Compensation insurance as required by the State of Alaska and Employers Liability Insurance.

B. Minimum Limits of Insurance

Contractor shall maintain limits no less than:

1. General Liability

$1,000,000
combined single limit per occurrence for bodily injury, property damage, personal injury and advertising injury.

$2,000,000
Products/Completed Operations

$2,000,000
General Aggregate Limit. The general aggregate limits shall apply separately to each project.

If the general liability insurance is written on a claims made form, the Contractor shall provide insurance for a period of two years after final payment of this agreement. The policy(s) shall evidence a retroactive date, no later than the beginning of this Agreement.

2. Auto Liability:

   $1,000,000
   combined single limit per accident for bodily injury and property damage.

3. Worker's Compensation and Employers Liability:

   Worker's Compensation shall be statutory as required by the State of Alaska. Employers liability shall be endorsed to the following minimum limits:

   Bodily Injury - $1,000,000 Per Occurrence
   Bodily Injury - $1,000,000 Per Employee
   Bodily Injury by Disease - $1,000,000 Policy Limit

4. Excess Liability:

   In order to meet the required minimum limits of insurance it is permissible for the Contractor to combine an excess liability or umbrella policy with the general liability, auto liability or employers liability. In the instance where the Contractor purchases an excess liability or umbrella policy the occurrence limit and the aggregate limit may be of the same amount.

C. Deductibles and Self-Insured Retention

Prior to work commencing any deductible or self-insured retention must be declared and approved by the Borough. The Contractor may be requested to demonstrate how the deductible or self-insured retention will be funded in the event of a claim. At the option of the Borough, the Contractor shall reduce or eliminate such deductibles or self-insured retention as respects the Borough, its officers, officials, employees and volunteers; or the Contractor shall procure a bond guaranteeing payment of losses and related investigations, claim administration and defense expenses.

D. Other Insurance Provisions

The policies are to contain, or be endorsed to contain, the following provisions:

1. General Liability and Automobile Liability

   a. The Borough, its Administrator, officers, officials, employees and volunteers are to be covered as additional insureds as respects: liability arising out of activities performed by or on behalf of the Contractor; products and completed operations of the Contractor premises owned, occupied or used by the Contractor or automobiles owned, leased, hired or borrowed by the Contractor. The coverage shall contain no special limitation on the scope of protection afforded to the Borough, its Administrator, officers, officials, employees and volunteers.

   b. The Contractor's insurance coverage shall be primary insurance as respects the Borough, its Administrator, officers, officials, employees and volunteers. Any insurance or self-insurance maintained by the Borough, its Administrator, officers, officials, employees and volunteers shall be excess of the Contractor insurance and shall not contribute to it.

   c. The Contractor insurance shall apply separately to each insured against whom claim is made or suit is brought, except with respect to the limits of the insurer's liability.

3. Worker's Compensation and Employer's Liability

The insurer shall agree to waive all rights of subrogation against the Borough, its Administrator, officers, officials, employees and volunteers for losses arising from work performed by the Contractor or any subcontractor for the Borough.

4. All Insurance

Each insurance policy required by this Agreement shall be endorsed to state that coverage shall not be suspended, voided, canceled by either party, reduced in coverage or in limits except after 30 days prior written notice for nonpayment of premium or fraud on the part of the Contractor or 60 days prior written notice for any other reason by certified mail, return receipt requested, has been given to the Borough. Such notice shall be mailed by the Contractor to the attention of the Borough's Purchasing Officer.

E. Acceptability of Insurers

Insurance is to be placed with insurers with a minimum A.M. Best rating of A-VII.

F. Verification of Coverage

Contractor shall furnish the Borough with certificates of insurance and with certified copies of all endorsements effecting coverage required by this clause. The certificates and endorsements for each insurance policy are to be signed by a person authorized by that insurer to bind coverage on its behalf. The certificates are to be on forms acceptable to the Borough. All certificates are to be received and approved by the Borough before work commences. The Borough reserves the right to require complete, certified copies of all required insurance policies, at any time.

G. Subcontractors

Contractor shall include all subcontractors as insured under its policies or shall furnish separate certificates and endorsements for each subcontractor. All coverage for subcontractors shall be subject to all requirements stated herein.

H. Lapse in Coverage

A lapse in insurance coverage is a material breach of this agreement which may result in immediate termination of the agreement, pursuant to the appropriate Section within the contract.

SECTION 24. AGREEMENT ADMINISTRATION.

A. The Borough Manager, or their designee, will be the representative of the Borough administering this Agreement.

B. The services to be furnished by the Contractor shall be administered, supervised, and directed by:

_____	_____
PRINTED NAME	TITLE

In the event that the individual named above or any of the individuals identified in the Bid to perform work under the Agreement is unable to serve for any reason, the Contractor shall appoint a successor in interest subject to a written approval of the Matanuska-Susitna Borough.

SECTION 25. UNDERSTANDING.

The Contractor acknowledges that the Contractor has read and understands the terms of this Agreement, has had the opportunity to review the same with counsel of the Contractor's choice, and is executing this Agreement of the Contractor's own free will.

SECTION 26. CONTRACTORS' VIOLATIONS OF TAX OBLIGATIONS.

A. Any Contractor in arrears on a Borough obligation, including, but not limited to tax, assessment, lease, sale, or rental payments, whether as an individual, or as a representative of a business, organization, firm, corporation, or partnership, shall not be awarded the Agreement if the delinquency is not cured within ten calendar days of receipt of written notice sent by the Borough of the delinquency.

B. This Agreement can be terminated for cause, pursuant to Section 10, if it is determined that a Contractor, whether the amounts owed are in the name of the Contractor as an individual or as a representative of a firm, business, corporation, or partnership, is in arrears of any taxation, lease or rental agreement that is due to the Borough that is not remedied within 10 calendar days of notification by regular mail.

C. The Borough reserves any right it may have to offset amounts owed by an individual, firm, corporation or business for delinquent Borough taxes, moneys owed on sales, assessments, leases and rental agreements, against any amount owing to the same under an Agreement between the Borough and the same.

SECTION 27. ENVIRONMENTAL SPILLS. Reporting or clean-up of any spills of oil and/or hazardous substances larger than one gallon must be reported to ADEC by the Contractor. Any quantity of a spilled hazardous substance must be cleaned up, containerized, and disposed of in a proper manner. All spills in the water must be reported immediately to ADEC. Clean-up procedures are specified in ADEC's Oil and Hazardous Substances Pollution Control Regulations, 18AAC75. All inquiries may be directed to the Wasilla ADEC office at 376-5038.

SECTION 28. THIRD PARTY FINANCING AGREEMENTS AND/OR ASSIGNMENTS OF PAYMENT NOT ALLOWED. Because of additional administrative and accounting time required of borough departments/divisions when third party financing agreement and/or assignments of payment are permitted, they will not be allowed under any agreement resulting from this Invitation to Bid.

SECTION 29. FLOW DOWN PROVISIONS. This Contract may include flow down provisions. This Contract may be issued in connection with another government agency and may include flow down or contract provisions required by that agency. In the event of a conflict between the terms and conditions of the general agreement and any flow down terms and conditions, the flow down terms and conditions shall govern. The Consultant agrees to comply with any and all flow down or contract provisions required by the Borough or another government agency that are included in the Contract. In the event that flow down or contract provisions required by other agencies or by Law are inadvertently omitted from this Contract, both parties agree to negotiate in good faith for that provisions inclusion into the Contract.

SECTION 30. CONTRACTS ENFORCEABLE AGAINST THE BOROUGH (MSB CODE 3.08.120). A contract for supplies, services, professional services or construction, or any amendment to the contract, may not be enforced against the borough unless its terms have been approved in accordance with this chapter, and unless the contract or amendment to the contract has been set forth in writing, executed in accordance with this chapter.

SECTION 31. PUBLICATION, REPRODUCTION AND USE OF MATERIALS. No material produced, in whole or in part, under this Agreement shall be subject to copyright in the United States or in any other country. The Borough shall have unrestricted authority to publish, disclose, distribute and otherwise use, in whole or in part, any reports, data or other materials prepared under this Agreement.

SECTION 32. AUTHORITY OF THE PURCHASING OFFICER (MSB Code 3.08.150)

All borough contracts for supplies, services, professional services and construction, and any amendments to the contracts shall be signed by the Manager or the Purchasing Officer.

MSB Code 3.08.170 CONTRACT AMENDMENTS; ASSEMBLY APPROVAL states

(A) Contract amendment shall not be used to avoid procurement by the competitive procedures establish under this title.

(B) Except for emergency procurement authorized under MSB 3.08.200, contracts for supplies, services, profession services and construction may be amended by the Manager or the Purchasing Officer with the approval of the assembly, as set forth in MSB 3.08.161, only for the following reasons:

(1) to change the quantity order or date of delivery under contract for supplies, where necessary to meet unforeseen borough requirements;

(2) to change the quantity of services or professional services to be rendered, or to change the scope of a project under a contract for services or professional services where necessary to meet unforeseen changes in borough requirements;

(3) to change the scope of a project or the scope of services or professional services under a construction contract to meet unforeseen borough requirements, or to change the specification under a construction contract because unforeseen conditions render the original specification impracticable;

(4) to change the time for completing a project under a contract for services, professional services or construction;

(5) to correct an error in contract specifications made by the borough in good faith or to resolve a good faith dispute between the borough and a contractor as to a party's rights and obligations under the contract; and

(6) to change administrative provisions of a contract without materially altering the contract terms governing the quantity or quality of supplies, services, professional services or construction furnished the borough.

For these purposes, the Purchasing Officer is defined as **Rustin Krafft** during absences of the Purchasing Officer, the Assistant Purchasing Officer has been delegated the authority to act as the Purchasing Officer.

AUTHORITY OF THE BOROUGH PROJECT MANAGER

The Borough Project Manager has the authority to monitor and administer the Agreement, but cannot make changes to the amount of the contract nor change the completion date of the contract

I hereby acknowledge that I have read and understand the authority granted to the parties by the Matanuska-Susitna Borough.

_____ _____

CONTRACTOR SIGNATURE TITLE

SECTION 33. FUND VERIFICATION. Fund source and verification of funds for this project:

Funding Source: **Purchase Order 2020-2572**

MATANUSKA-SUSITNA BOROUGH

_____

RUSTIN M. KRAFFT

PURCHASING OFFICER

SELECTED CONTRACTOR

_____
Signature

_____
Print Name

_____
Title

SAMPLE

STATE OF ALASKA

Third Judicial District

On _____, 20_____, _____ personally appeared before me,

1. _____ who is personally known to me
2. _____ whose identity I proved on the basis of _____
3. _____ whose identity I proved on the oath/affirmation of _____, a credible witness

to be the signer of the **Bid #20-095B, MARBLE WAY FISH PASSAGE** and he/she acknowledged that he/she signed it.

_____
NOTARY PUBLIC
My commission expires: _____

STATE OF ALASKA

Third Judicial District

On _____, 20_____, RUSTIN M. KRAFFT, Purchasing Officer, personally appeared before me, who is personally known to me, to be the signer of the above document, and he acknowledged that he signed it on behalf of the Matanuska-Susitna Borough.

_____
NOTARY PUBLIC
My commission expires: _____

BID #20-095B

SECTION VI

SAMPLE FORMS

ADFA-01

OP ID: TWI

ACORD

CERTIFICATE OF LIABILITY INSURANCE

DATE (MM/DD/YYYY)

THIS CERTIFICATE IS ISSUED AS A MATTER OF INFORMATION ONLY AND CONFERS NO RIGHTS UPON THE CERTIFICATE HOLDER. THIS CERTIFICATE DOES NOT AFFIRMATIVELY OR NEGATIVELY AMEND, EXTEND OR ALTER THE COVERAGE AFFORDED BY THE POLICIES BELOW. THIS CERTIFICATE OF INSURANCE DOES NOT CONSTITUTE A CONTRACT BETWEEN THE ISSUING INSURER(S), AUTHORIZED REPRESENTATIVE OR PRODUCER, AND THE CERTIFICATE HOLDER.

IMPORTANT: If the certificate holder is an ADDITIONAL INSURED, the policy(ies) must have ADDITIONAL INSURED provisions or be endorsed. If SUBROGATION IS WAIVED, subject to the terms and conditions of the policy, certain policies may require an endorsement. A statement on this certificate does not confer rights to the certificate holder in lieu of such endorsement(s).

PRODUCER

CONTACT NAME:

PHONE (A/C, No, Ext): FAX (A/C, No):

E-MAIL ADDRESS:

INSURER(S) AFFORDING COVERAGE	NAIC #
INSURER A :	
INSURER B :	
INSURER C :	
INSURER D :	
INSURER E :	
INSURER F :	

INSURED

Company Name

COVERAGES CERTIFICATE NUMBER: 1 REVISION NUMBER:

THIS IS TO CERTIFY THAT THE POLICIES OF INSURANCE LISTED BELOW HAVE BEEN ISSUED TO THE INSURED NAMED ABOVE FOR THE POLICY PERIOD INDICATED. NOTWITHSTANDING ANY REQUIREMENT, TERM OR CONDITION OF ANY CONTRACT OR OTHER DOCUMENT WITH RESPECT TO WHICH THIS CERTIFICATE MAY BE ISSUED OR MAY PERTAIN, THE INSURANCE AFFORDED BY THE POLICIES DESCRIBED HEREIN IS SUBJECT TO ALL THE TERMS, EXCLUSIONS AND CONDITIONS OF SUCH POLICIES. LIMITS SHOWN MAY HAVE BEEN REDUCED BY PAID CLAIMS.

INSR LTR	TYPE OF INSURANCE	ADDL INSD	SUBR WVD	POLICY NUMBER	POLICY EFF (MM/DD/YYYY)	POLICY EXP (MM/DD/YYYY)	LIMITS	
A	X COMMERCIAL GENERAL LIABILITY CLAIMS-MADE X OCCUR GEN'L AGGREGATE LIMIT APPLIES PER: POLICY X PRO-JECT LOC OTHER:	X			03/15/2019	03/15/2020	EACH OCCURRENCE DAMAGE TO RENTED PREMISES (Ea occurrence) MED EXP (Any one person) PERSONAL & ADV INJURY GENERAL AGGREGATE PRODUCTS - COMP/OP AGG	$ $ $ $ $ $ $
A	AUTOMOBILE LIABILITY ANY AUTO OWNED AUTOS ONLY X SCHEDULED AUTOS X HIRED AUTOS ONLY X NON-OWNED AUTOS ONLY	X			11/04/2019	11/04/2020	COMBINED SINGLE LIMIT (Ea accident) BODILY INJURY (Per person) BODILY INJURY (Per accident) PROPERTY DAMAGE (Per accident)	$ $ $ $ $
	UMBRELLA LIAB OCCUR EXCESS LIAB CLAIMS-MADE DED RETENTION $						EACH OCCURRENCE AGGREGATE	$ $ $
B	WORKERS COMPENSATION AND EMPLOYERS' LIABILITY ANY PROPRIETOR/PARTNER/EXECUTIVE OFFICER/MEMBER EXCLUDED? (Mandatory in NH) Y/N Y If yes, describe under DESCRIPTION OF OPERATIONS below	N / A			12/31/2019	12/31/2020	X PER STATUTE OTH-ER E.L. EACH ACCIDENT E.L. DISEASE - EA EMPLOYEE E.L. DISEASE - POLICY LIMIT	 $ $ $
C								

Future Expiration Date

Future Expiration Date

Future Expiration Date

DESCRIPTION OF OPERATIONS / LOCATIONS / VEHICLES (ACORD 101, Additional Remarks Schedule, may be attached if more space is required)

The Borough, its Administrator, officers, officials, employees, and volunteers are to be covered as additional insured.

This box should also include the sentence above, and the Bid/Contract Number (#20-###B).
Limits for each Type of Insurance must meet the requirements listed in the Bid Documents.

CERTIFICATE HOLDER

Matanuska Susitna Borough
350 East Dahlia Avenue
Palmer, AK 99645

CANCELLATION

SHOULD ANY OF THE ABOVE DESCRIBED POLICIES BE CANCELLED BEFORE THE EXPIRATION DATE THEREOF, NOTICE WILL BE DELIVERED IN ACCORDANCE WITH THE POLICY PROVISIONS.

© 1988-2015 ACORD CORPORATION. All rights reserved.
The ACORD name and logo are registered marks of ACORD

MATANUSKA-SUSITNA BOROUGH BID NO: 20-095B

BID BOND

KNOW ALL MEN BY THESE PRESENT, that we, the undersigned, _____ as Principal, and _____ as Surety, are hereby held and firmly bound unto Matanuska-Susitna Borough, Palmer, Alaska as OWNER in the penal sum of _____ for the payment of which, will and truly to be made, will hereby jointly and severally bind ourselves, successors and assigns.

Signed, this _____day of _____, 20_____.

The condition of the above obligation is such that whereas the Principal has submitted to Matanuska-Susitna Borough a certain BID, attached hereto and hereby made a part hereof to enter into a contract in writing, for BID #**20-095B**.

NOW, THEREFORE,

(a) If said BID shall be rejected, or

(b) If said BID shall be accepted and the Principal shall execute and deliver a contract in the Form of Contract attached hereto properly completed in accordance with said BID, and shall furnish a BOND for his faithful performance of said Contract, and for the payment of all persons performing labor or furnishing materials in connection therewith,

then this obligation shall be void, otherwise the same shall remain in force and effect: it be expressly understood and agreed that the liability of the Surety for any and all claims hereunder shall, in no event, exceed the penal amount of this obligation as herein stated.

The Surety, for value received, hereby stipulates and agrees that the obligation of said Surety and BOND shall be in no way impaired or affected by any extension of the time within which the OWNER may accept such BID; and said surety does hereby waive notice of any such extension.

IN WITNESS WHEREOF, the Principal and the Surety have hereunto set their hands and the Surety has caused their seal to be hereto affixed and these presents to be signed by their proper officers, the day and year first set forth above.

Bond must be acceptable to Matanuska-Susitna Borough.

_____ (L.) _____

Principal Surety

By:_____ By: _____

IMPORTANT: Surety Companies executing bonds must be authorized to transact business in the state of Alaska where this project is located. **INDIVIDUAL SURETY BONDS ARE NOT ACCEPTABLE.**

MARBLE WAY FISH PASSAGE

BID #20-095B

PROPOSED SUBCONTRACTORS AND SUPPLIERS

NOTE: If your company is the apparent low bidder, this list is to be delivered to the borough within 24 hours of request from the Purchasing Division. Put an 'X' or '√' in the right columns indicating if the company is a sub-contractor or a supplier.

Sub-contractor addresses must include the Zip Code, used for DOL Filings.

#	ITEM	CONTRACTOR NAME	CONTRACTOR ADDRESS	SUB	SUP
1					
2					
3					
4					
5					
6					
7					
8					
9					
10					
11					
12					
13					
14					
15					
16					
17					
18					

SIGNATURE _____ COMPANY NAME _____ DATE _____

LABOR AND MATERIAL PAYMENT BOND

KNOW ALL MEN BY THESE PRESENTS,

That _____as Contractor, and _____ , as Surety, are held and firmly bound unto Matanuska-Susitna Borough, Palmer, Alaska, hereinafter called OWNER in the sum of _____ dollars, for the payment of which sum well and truly to be made, we bind ourselves, our heirs, executors, administrators, successors and assigns, jointly and severally, firmly by these presents.

WHEREAS, said Contractor has been awarded and is about to enter into the annexed contract with said OWNER to perform all work required under the Bid **#20-095B**.

NOW THEREFORE, if said Contractor, or subcontractors, fails to pay for any materials, equipment, or other supplies, or for rental of same, used in connection with the performance of work contracted to be done, or for amounts due under applicable State law for any work or labor thereon, said Surety will pay for the same in an amount not exceeding the sum specified above and, in the event suit is brought upon this bond, a reasonable attorney's fee to fixed by the court. This bond shall insure to the benefit of any persons, companies or corporation entitled to file claims under applicable State law.

Provided, that any alterations in the work to be done or the materials to be furnished, which may be made pursuant to the terms of said Contract, shall not in any way release either said Contractor or said Surety thereunder, nor shall any extensions of time granted under the provisions of said Contract release either said Contractor or said Surety, and notice of such alterations or extensions of the Contract is hereby waived by said Surety.

Signed, this _____day of _____, 20_____.

(SEAL AND NOTARIAL ACKNOWLEDGMENT OF SURETY)

_____
(Contractor)

by: _____
(Signature)

_____
(Agent)

_____
(Surety)

by: _____
(Signature)

by: _____
(Signature)

Address: _____

_____

Address: _____

_____

Telephone No._____

Telephone No._____

IMPORTANT: Surety Companies executing bonds must be authorized to transact business in the state of Alaska where this project is located. **INDIVIDUAL SURETY BONDS ARE NOT ACCEPTABLE.**

PERFORMANCE BOND

KNOW ALL MEN BY THESE PRESENTS,

That _____as Contractor, and _____, as Surety, are held and firmly bound unto Matanuska-Susitna Borough, Palmer, Alaska, hereinafter called OWNER in the sum of _____dollars, for the payment of which sum well and truly to be made, we bind ourselves, our heirs, executors, administrators, successors and assigns, jointly and severally, firmly by these presents.

WHEREAS, said Contractor has been awarded and is about to enter into the annexed contract with said OWNER to perform all work required under Bid **#20-095B** of the Owner's specifications, entitled **MARBLE WAY FISH PASSAGE**.

NOW THEREFORE, if said Contractor shall perform all the requirements of said contract required to be performed on his part, at the times and in the manner specified therein, then this obligation shall be null and void, otherwise it shall remain in full force and effect.

THE Surety hereby waives notice of any alteration or extension of time made by the Owner.

WHENEVER Contractor shall be, and declared by Owner to be in default under the Contract, the Owner having performed Owner's obligations thereunder, the Surety may promptly remedy the default, or shall promptly

1) Complete the Contract in accordance with its terms and conditions, or

2) Obtain a bid or bids for completing the Contract in accordance with its terms and conditions, and upon determination by Surety of the lowest responsible bidder, or, if the Owner elects, upon determination by the Owner and the Surety jointly of the lowest responsible bidder, arrange for a contract between such bidder and Owner, and make available as Work progresses (even though there should be a default or a succession of defaults under the contract or contracts of completion arranged under this paragraph) sufficient funds to pay the cost of completion less the balance of the contract price; but not exceeding, including other costs and damages for which the Surety may be liable hereunder, the amount set forth in the first paragraph hereof. The term "balance of the contract price," as used in this paragraph, shall mean the total amount payable by Owner to Contractor under the Contract and any amendments thereto, less the amount previously paid by Owner to Contractor.

Any suit under this bond must be instituted before the expiration of two years from the date on which final payment under the Contract falls due.

No right of action shall accrue on this bond to or for the use of any person or corporation other than the Owner named herein or the heirs, executors, administrators or successors of the Owner.

Signed, this _____day of _____, 20_____.

(SEAL AND NOTARIAL ACKNOWLEDGMENT OF SURETY)

_____
(Contractor)

by: _____
(Signature)

_____	_____
(Agent)	(Surety)
by: _____	_____
(Signature)	(Signature)
Address: _____	Address: _____
_____	_____
Telephone No.: _____	Telephone: _____

IMPORTANT: Surety Companies executing bonds must be authorized to transact business in the state of Alaska where this project is located. **INDIVIDUAL SURETY BONDS ARE NOT ACCEPTABLE.**

CONSENT OF
SURETY COMPANY
TO FINAL PAYMENT

OWNER ☐
ARCHITECT ☐
CONTRACTOR ☐
SURETY ☐
OTHER ☐

PROJECT: Bid **#20-095B, MARBLE WAY FISH PASSAGE**
(name, address)

TO (Owner)

ARCHITECT'S PROJECT NO:
CONTRACT FOR:

CONTRACT DATE:

CONTRACTOR:

In accordance with the provisions of the Contract between the owner and the Contractor as indicated above, the

(here insert name and address of Surety Company)

, SURETY COMPANY,

on bond of (here insert name and address of Contractor)

, CONTRACTOR,

hereby approves the final payment to the Contractor, and agrees that final payment to the Contractor shall not relieve the Surety Company of any of its obligations to (here insert name and address of Owner)

, OWNER,

as set forth in the said Surety Company's bond.

IN WITNESS WHEREOF,
the Surety Company has hereunto set its hand this _____ day of _____ 20_____

_____
Surety Company

_____
Signature of Authorized Representative

Attest:
(Seal)

_____
Title

PROJECT NAME: **MARBLE WAY FISH PASSAGE**

BID NUMBER: **20-095B**

CONTRACTOR'S RELEASE AND AFFIDAVIT OF PAYMENTS OF DEBTS AND CLAIMS

The undersigned, being first duly sworn deposes and says:

1. That pursuant to this contract for project **#20-095B, MARBLE WAY FISH PASSAGE** between the undersigned and the Matanuska-Susitna Borough dated _____ the undersigned hereby certifies that, except as listed below, he has paid in full or has otherwise satisfied all obligations for materials and equipment furnished for all work, labor, and services performed and for all known indebtedness and claims for which the Contractor or the Matanuska-Susitna Borough is or may become liable in connection with performance under this contract. The Contractor warrants that he has made diligent search and inquiry to determine the existence of any such claim, debt or liability and that all such obligations, whether liquidated, unliquidated or disputed, have been satisfied.

2. The Contractor further certifies he did not extend any loan, gratuity, or gift of money of any form whatsoever to any employee or agent of the Borough, that he did not rent or purchase any equipment or materials from any employee of the Borough, nor to the best of his knowledge, from any agent of any employee of the Borough, and that he has not made any promise to an employee or agent of the Borough to do or undertake any such action after completion of the subject contract.

3. Pursuant to the above-described contract and in consideration of the final payment in the amount of $, the undersigned Contractor hereby remise, release and discharge the Matanuska-Susitna Borough, its officers, agents and employees of and from any and all further claim, debt, charge, demand, liability or other obligation whatsoever under or arising from said contract, whether known or unknown and whether or not ascertainable at the time of the execution of this instrument except specified claims in stated amounts or in estimated amounts where the amounts are not susceptible of exact statement by the Contractor, as follows:

_____

_____

_____.

The Contractor, in connection with the claims which are not released as set forth above, certifies that he has or agrees that he will comply with all the provisions of the said contract, including without limitation those provisions relating to notification of the contracting officer and relating to the prosecution of claims.

4. The Contractor shall indemnify, defend, and hold and save the Borough, its elected and appointed officers, agents and employees, harmless from any and all claims, demands, suits, or liability of any nature, kind or character, including costs, expenses, and attorney fees. The Contractor shall be responsible under this clause for any and all legal actions or claims of any character resulting from injuries, death, economic loss, damages, violation of statutes, ordinances, constitutions or other laws, rules or regulations, contractual claims, or any other kind of loss, tangible or sustained by any person, or property arising from Contractor's or Contractor's Officers, agents, employees, partners, attorneys, suppliers, and subcontractor's performance or failure to perform this Agreement in any way whatsoever. This defense and indemnification responsibility includes claims alleging acts or omissions by the Borough or its agents which are said to have contributed to the losses, failure, violations, or damage. However, Contractor shall not be responsible for any damages or claim arising from the sole negligence or willful misconduct of the Borough, its agents, or employees.

If any portion of this clause is voided by law or court of competent jurisdiction, the remainder of the clause should remain enforceable.

IN WITNESS WHEREOF, this release and affidavit has been executed this _____ day of _____, 20_____.

_____
(Contractor's signature)

Title_____

SUBSCRIBED AND SWORN to before me this _____ day of_____, 20_____.

_____
Notary Public
My commission expires: _____

(NOTE: In case of a corporation, the attached Certificate of Authority must be completed by a corporate officer other than the one who signs above.)

CERTIFICATE OF AUTHORITY

I, _____, certify that I am the

_____ (official title) of the corporation named as

Contractor in the foregoing release and affidavit; that _____

who signed said release and affidavit on behalf of the Contractor was then

_____ (official title) of said corporation; that said release and

affidavit was duly signed for and in behalf of said corporation by authority of its governing

body and is within the scope of its corporate powers.

_____
(Signature)

_____
Notary Public for
My commission expires: _____

MATANUSKA-SUSITNA BOROUGH
350 EAST DAHLIA AVENUE
PALMER, ALASKA 99645

FIELD MEMO

Bid #20-095B
(Number)

MARBLE WAY FISH PASSAGE _____
(Project) (Date)

REFERENCE: (Drwg. or Spec.) _____

DESCRIPTION:

_____
_____
_____
_____
_____
_____
_____
_____
_____
_____

_____
(Source)

_____
(Date)

RESPONSE:
_____
_____
_____

RESPONSE NEEDED BY: _____

ACTION REQUIRED BY: _____

RESOLUTION:

Notification must be given in accordance with the contract documents, if any architect/engineer response/description causes any change to contract documents.

MATANUSKA-SUSITNA BOROUGH

Planning and Land Use Department
Development Services Division

350 East Dahlia Avenue • Palmer, AK 99645
Phone (907) 861-7822 • Fax (907) 861-8158
E-mail: permitcenter@matsugov.us
www.matsugov.us

Contractor's Earth Materials Extraction Source Report for
MSB Construction and Maintenance Projects

Contract or Purchase Order #

_____

Location of Extraction Source:

MSB Tax ID#_____

Street Address:_____

_____

Facility / Business Name: _____ Phone:_____

Point of Contact for Extraction Source:_____

Contractor Contact Information:

Business Name:_____ Email:_____

Point of Contact:_____ Phone:_____

Mailing_____ Cell:_____

_____

Description: What type(s) of material is being extracted? _____

_____

Total cubic yards to be extraction per year: _____

Total projected cubic yards to be extracted: _____

What is the final year extraction will occur?: _____

Will extraction activities occur within four feet of the seasonal high water table?_____

Contactor Statement:

The information submitted in this form is true and accurate to the best of my knowledge.

_____

Contractor Signature Printed Name Date

FOR INTERNAL USE ONLY, TO BE COMPLETED BY MSB STAFF.

Contract or Purchase Order #:_____

MSB Development Services Division has found the proposed extraction site:

☐ Has been granted pre-existing legal nonconforming status (MSB 17.30.025)

☐ Has been granted an Administrative Permit by the Planning Director (MSB 17.30.030(A)(1))

☐ Has been granted a Conditional Use Permit by the Planning Commission (MSB 17.30.030(A)(2))

☐ Has be designated an Interim Materials District (MSB 17.28)

Permit #:_____

☐ Does not require a permit (MSB 17.30.020) for the following reason(s):_____

_____

_____

☐ Requires a permit, but does not have one.

☐ An application for an extraction permit has been submitted for the proposed extraction site with an estimated decision date of _____.

***Please note that there is no guarantee the requested permit will be approved.**

☐ Other:_____

_____

_____

_____

Reviewer Signature Printed Name & Title Date

BID #20-095B

SECTION VII

NOTICE TO CONTRACTORS

NOTICE TO CONTRACTORS

Please visit the State of Alaska Department of Labor web site
for the current and applicable published state documents at:

Http://labor.alaska.gov/lss/pamp600.htm

For Federal wages, General Decision Number: AK20200006 1/03/2020 applies

Visit the U.S. Government website at:

https://beta.sam.gov/wage-determination/AK20200006/0

BID #20-095B

SECTION VIII

ATTACHMENTS

Attachment 1:	Plans	20 pages
Attachment 2:	Cross Sections and Profiles	6 pages
Attachment 3:	Permits	31 pages
Attachment 4:	Lobbying Certification	1 page
Attachment 5:	Debarment Certification	2 pages

MATANUSKA-SUSITNA BOROUGH

DEPARTMENT OF PUBLIC WORKS
OPERATIONS AND MAINTENANCE DIVISION

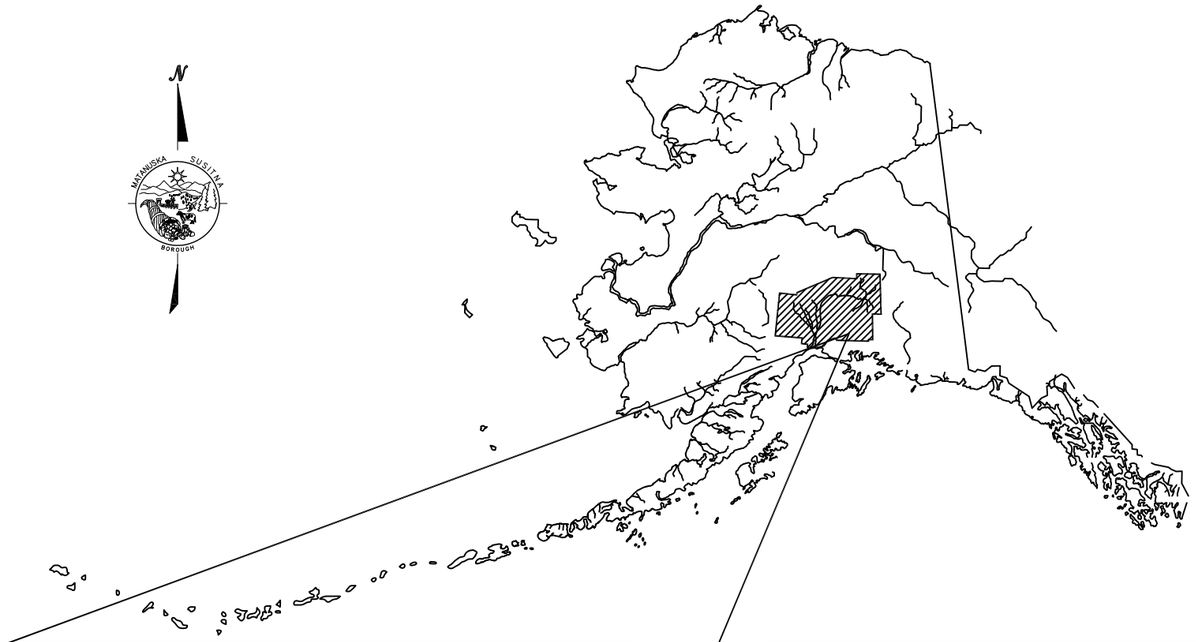

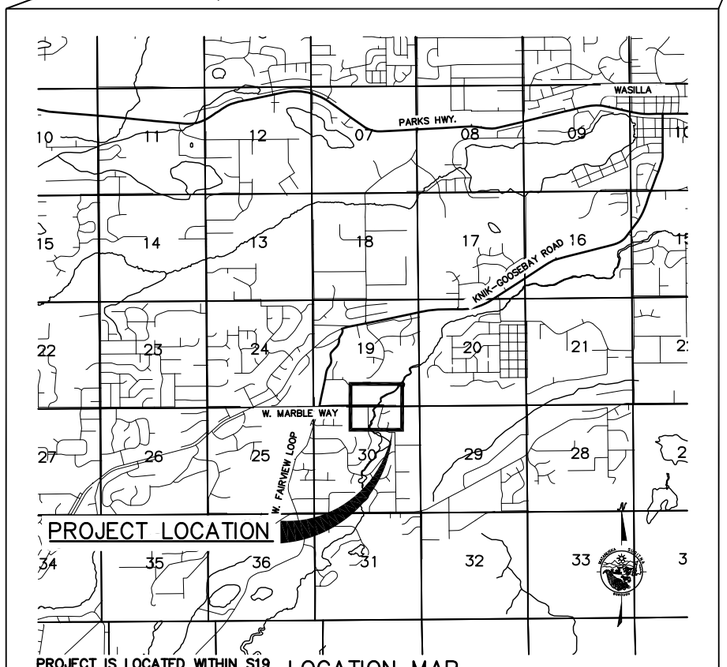

PROJECT IS LOCATED WITHIN S19 & S30, T17N, R1W OF THE S.M.

LOCATION MAP

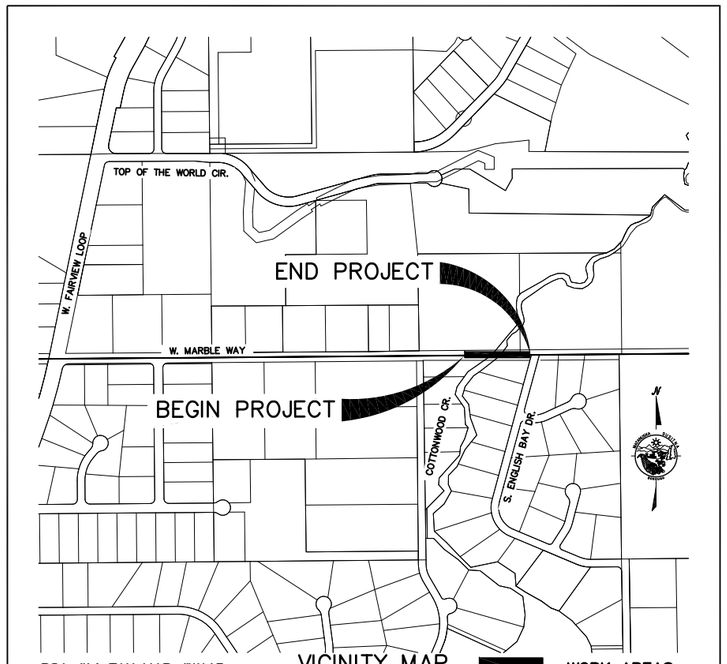

RSA #14 TAX MAP #WA13

VICINITY MAP

WORK AREAS

MARBLE WAY AT COTTONWOOD CREEK FISH PASSAGE

GRADING, DRAINAGE AND SURFACING

PROJECT NUMBER: 18-14-1793

SHEET INDEX

SHEET	TITLE
A1	COVER SHEET
A2	LEGEND, ABBREVIATIONS AND NOTES
A3	SURVEY CONTROL
B1	TYPICAL SECTIONS
C1–C2	ESTIMATE OF QUANTITIES AND SUMMARY TABLES
E1	DEMOLITION PLAN
E2–E3	DIVERSION PLAN
E4–E5	DETAILS
E6–E8	HEADWALL DETAILS
F1–F3	PLAN AND PROFILE SHEETS
G1	APPROACHES AND GRADING
J1	PERMANENT TRAFFIC CONTROL
L1	LANDSCAPING AND RESTORATION
Q1	ESCP

STATE OF ALASKA
49TH
STEVEN M KARI
No. CE 9203
1/17/2020
REGISTERED PROFESSIONAL ENGINEER

Stantec

PLANS DEVELOPED BY:
STANTEC CONSULTING SERVICES INC.
351 W. Parks Hwy., Suite 200
Wasilla, Alaska 99654
Phone: (907) 376-7815
C.A. # 126386

U:\204706540\0\drawing\C\sheets\18-14-1793 Marble Way at Cottonwood Creek Fish Passage Title Sheet.dwg 1/17/2020 11:00 AM

GENERAL NOTES:

1. VERTICAL AND HORIZONTAL ALIGNMENTS SHOWN ON THESE PLANS ARE SUBJECT TO MINOR REVISIONS.
2. PIPE LENGTHS AND LOCATIONS ARE APPROXIMATE ONLY AND ARE SUBJECT TO ADJUSTMENTS.
3. LIMIT SPEED OF VEHICLES ASSOCIATED WITH CONSTRUCTION TO 25 M.P.H. WHEN IN THE WORK ZONE.
4. THE CONTRACTOR SHALL ENSURE CULVERT PIPES HAVE ADEQUATE PROTECTION FROM HEAVY CONSTRUCTION EQUIPMENT DURING COMPLETION OF BACKFILLING AND GRADING OPERATIONS.
5. THE CONTRACTOR IS REQUIRED TO OBTAIN AN ADEC, APDES PERMIT PRIOR TO THE UTILITY RELOCATION ACTIVITIES. UTILITY RELOCATION WORK DONE BY THE UTILITY COMPANIES WILL BE PERFORMED UNDER THIS PERMIT.
6. A TEMPORARY CONSTRUCTION EASEMENT (TCE) SHALL BE OBTAINED BY THE MATANUSKA-SUSITNA BOROUGH WHEN REQUIRED.
7. THE ESTIMATED AREA OF CLEARING AND GRUBBING IS 0.4 ACRES

LEGEND:

		EXISTING	PROPOSED
COMMUNICATIONS CABLE	(DIRECT BURY)	UGC	UGC
TELEPHONE	(OVERHEAD)	OHT	OHT
	(DIRECT BURY)	UT	UT
ELECTRIC	(OVERHEAD)	OHE	OHE
	(DIRECT BURY)	UE	UE
GAS		G	G
FIBER OPTIC CABLE		FO	FO
TV COAXIAL CABLE		CATV	CATV
EXISTING FENCE			
TREE LINE			
ROW			
PROPERTY LINE			
EXISTING UTILITY EASEMENT			
EXISTING DRAINAGE EASEMENT			
SPECIAL DITCH			
CUT SLOPE			
FILL SLOPE			
EXISTING ROAD/APPROACH/DRIVEWAY			
POLE ANCHOR /w GUY			
ELECTRICAL PEDESTAL		E	E
TELEPHONE PEDESTAL		T	T
CABLE T.V. PEDESTAL		TV	TV
SIGN (FACING)			
TRANSMISSION TOWER [STEEL]			
TRANSMISSION TOWER [WOOD]			
POWER STUB			
CLEANOUT		CO	
PERMANENT CHECK DAM			
STORM DRAIN MANHOLE			
ELECTRIC METER			
ELECTRIC BOX		E	
LIGHT POLE WITH MAST ARM			
CABLE TELEVISION PEDESTAL		TV	
WATER WELL			
DECIDUOUS TREE >4" <12"			
CONIFER TREE >4" <12"			
UTILITY POLE		U	
DETENTION BASIN			

COMMON ABBREVIATIONS

A.C.	ASPHALT CONCRETE	PRC	POINT OF REVERSE CURVE
ALUM.	ALUMINUM	P.T.	POINT OF TANGENCY
BM	BENCH MARK	PT.	POINT
B.O.P.	BEGINNING OF PROJECT	P.U.E.	PUBLIC USE EASEMENT
BC	BRASS CAP	PVI	POINT OF VERTICAL CURVE
BFS	BEGIN FULL SUPERELEVATION	PVMT.	PAVEMENT
BST	BEGIN SUPERELEVATION TRANSITION	R	RADIUS
℄	CENTERLINE	RAM	RECYCLED ASPHALT MATERIAL
CSP	CORRUGATED STEEL PIPE	ROW	RIGHT-OF-WAY
e	RATE OF SUPERELEVATION	RP	RADIUS POINTS
E.	EAST	RT.	RIGHT
EFS	END FULL SUPERELEVATION	S.	SOUTH
℄	FLOWLINE	SDMH	STORM DRAIN MANHOLE
F.O.	FIBER OPTIC	SPA	ALUMINUM STRUCTURAL PLATE ARCH
LT.	LEFT	ST.	STREET
LP	LAYOUT POINT	STA.	STATION/STATIONING
LVC	LENGTH VERTICAL CURVE	SUBD.	SUBDIVISION
MAX.	MAXIMUM	T	TANGENT
MIN.	MINIMUM	TBM	TEMPORARY BENCH MARK
MON.	MONUMENT	TYP.	TYPICAL
N.	NORTH	UG	UNDERGROUND
N.T.S.	NOT TO SCALE	VC	VERTICAL CURVE
O.C.	ON CENTER	VPI	VERTICAL POINT OF INTERSECTION
P.C.	POINT OF CURVATURE	W.	WEST
PED	PEDESTRIAN	WB	WEST BOUND
℘	PROPERTY LINE	W/	WITH
PI	POINT OF INTERSECTION		

PROJECT SUMMARY

NAME	BEGIN STATION	END STATION	PROJECT LENGTH	LENGTH OF GRADING	WIDTH	DESIGN SPEED
MARBLE WAY	9+37.33	14+45.25	507.92'	397.33'	24'	25 MPH

CALL BEFORE YOU DIG!

CONTRACTOR SHALL CALL A MINIMUM OF
3 DAYS IN ADVANCE OF CONSTRUCTION

ALASKA DIGLINE....907-278-3121 OR 800-478-3121

CALL OR GO TO WWW.AKONECALL.COM/STATEWIDE.HTM
FOR MEMBER LIST OF WHO WILL BE NOTIFIED

STATE OF ALASKA
49TH
STEVEN M KARI
No. CE 9203
1/17/2020
REGISTERED PROFESSIONAL ENGINEER

BY	DATE	REVISION

Stantec
PLANS DEVELOPED BY:
STANTEC CONSULTING SERVICES INC.
351 W. Parks Hwy., Suite 200
Wasilla, Alaska 99654
Phone: (907) 376-7815
C.A. #126386

MARBLE WY AT COTTONWOOD CR. FISH PASSAGE
MATANUSKA-SUSITNA BOROUGH
LEGEND, ABBREVIATIONS AND NOTES

DATE: 1/17/2020
SHEET: A2 OF A3
PROJECT NUMBER: 18-14-1793

Designed By:
Drawn By:
Checked By:
Date Revised: 1/17/2020, 10:52 AM
Layout Name: Notes-Abbreviations
File Path and Name: U:\204706540\drawing\C\sheets\18-14-1793 Marble Way at Cottonwood Creek Fish Passage Notes and Abbr.dwg

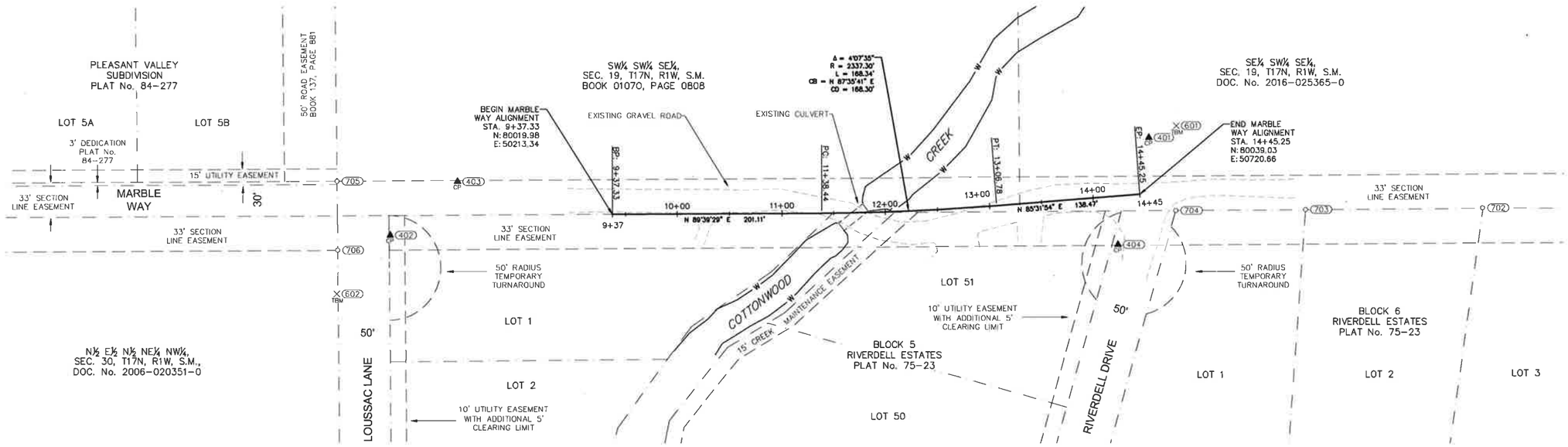

Found Monuments					
Point #	Northing	Easting	Description	Station	Offset
* 701	80026.74	51267.84	Fnd 3 1/4 Mon		
702	80025.85	51049.28	Fnd 5/8 Rbr		
703	80024.49	50879.57	Fnd 5/8 Rbr		
704	80023.50	50754.74	Fnd 5/8 Rbr		
705	80051.47	49948.20	Fnd 5/8 Rbr		
706	79985.55	49949.00	Fnd 5/8 Rbr W/OPC		

* Not shown for clarity

Set Temporary Benchmarks						
Point #	Northing	Easting	Elevation	Description	Station	Offset
601	80105	50755	245.47	Set RR Spike: TBM		
602	79944	49948	240.58	Set RR Spike: TBM		

Set Control					
Point #	Northing	Easting	Description	Station	Offset
401	80093.25	50729.21	Set Rbr/RPC[STANTEC]: CONTROL POINT		0.00
402	80000.00	50000.00	Set Rbr/RPC[STANTEC]: CONTROL POINT		0.00
403	80051.03	50065.12	Set Rbr/RPC[STANTEC]: CONTROL POINT		0.00
404	79990.93	50699.55	Set Rbr/RPC[STANTEC]: CONTROL POINT	14+20.46	46.31

HORIZONTAL CONTROL

This survey uses a local ground coordinate system, in U.S. Survey Feet and is a modification of the Alaska State Plane Coordinate System, Zone 4. The local ground coordinate system preserves a state plane bearing basis while providing ground distances at the project location (see Conversion Parameters).

BASIS OF GEODETIC COORDINATES

The NAD83(2011) (Epoch 2010.00) published positions of the following National Geodetic Survey (NGS) Continuously Operating Reference Stations (CORS) were held fixed: "KEN5" (PID: DJ3029), "AC51" (PID: D01B12), and "AC75" (PID: DP3850), "AC48" (PID: D01809), "POT6" (PID: DJ3045).

CONVERSION PARAMETERS

To convert the ground coordinate system to NAD83(2011) (Epoch 2010.00) Alaska State Plane Zone 4, perform the following:
1. Scale about 80000.0000N, 50000.0000E (Control Point 402) by 0.9998951540.
2. Add 2675689.7188N, 1673133.3992E to the resulting coordinates.

To convert NAD83(2011) (Epoch 2010.00) Alaska State Plane Zone 4 to the ground coordinate system, perform the following:
1. Subtract 2675689.7188N, 1673133.3992E from project coordinates.
2. Scale about 80000.0000N, 50000.0000E (Control Point 402) by 1.0001048570.

VERTICAL CONTROL

The project vertical datum is GNSS-derived NAVD88 using Geoid12B (Alaska), holding the orthometric elevation of control point 402 fixed at 237.43 U.S. Survey Feet.

PROJECT NOTES

1. The information shown hereon is based on a field survey performed by Stantec Consulting Inc. from May 24–June 15, 2018.
2. This is not a boundary survey. Property information shown hereon is for general reference only. This drawing was prepared without the benefit of a title commitment and may not show all easements and other encumbrances.
3. All dimensions, coordinates, and elevations shown are in U.S. Survey Feet unless otherwise noted.
4. Survey control points shown on this sheet were surveyed using networked static GNSS techniques and least-squares adjusted using Trimble Business Center v4.00 office software. Recovered monuments were surveyed using redundant RTK GNSS techniques. GNSS measurements were acquired using Trimble R6 and R8 receivers. Temporary benchmark elevations were established through third-order differential leveling using a Trimble Dini digital level. The NGS maintained OPUS program was utilized for CORS baseline processing.
5. Documents referenced hereon are recorded in the Palmer Recording District, AK.

T17N R1W S. M.

0 25 50 100 150 200
SCALE IN FEET

CONTROL SYMBOLS LEGEND

- (XXX) POINT NUMBER IDENTIFIER
- ○ FOUND PROPERTY CORNER
- ▲ CP SET CONTROL POINT
- × TBM SET TEMPORARY BENCHMARK

Surveyor's Certificate

I hereby certify that I am properly Registered and Licensed to practice Land Surveying in the State of Alaska, and that this drawing represents a survey made by me or under my direct supervision, and that the monuments shown hereon actually exist as described, and that all dimensions and other details are correct to the extent shown hereon.

Gary M. Gervais LS-14823 12-21-18
Date

STATE OF ALASKA 49TH GARY M. GERVAIS No. LS14823 PROFESSIONAL LAND SURVEYOR
12-21-18

BY	DATE	REVISION

Stantec
PLANS DEVELOPED BY:
STANTEC CONSULTING SERVICES INC.
351 W. Parks Hwy., Suite 200
Wasilla, Alaska 99654
Phone: (907) 376-7815
C.A. # 126386

MARBLE WY AT COTTONWOOD CR. FISH PASSAGE
MATANUSKA-SUSITNA BOROUGH
SURVEY CONTROL

DATE: 12/20/2018
SHEET: A3 OF A3
PROJECT NUMBER: 18-14-1793

Designed By
Drawn By
Checked By

Date Revised: 12/20/2018, 3:12 PM
Login Name:
File Path and Name: L:\2041\01540\01\Survey\Dwg\CO_SURVEY01.dwg

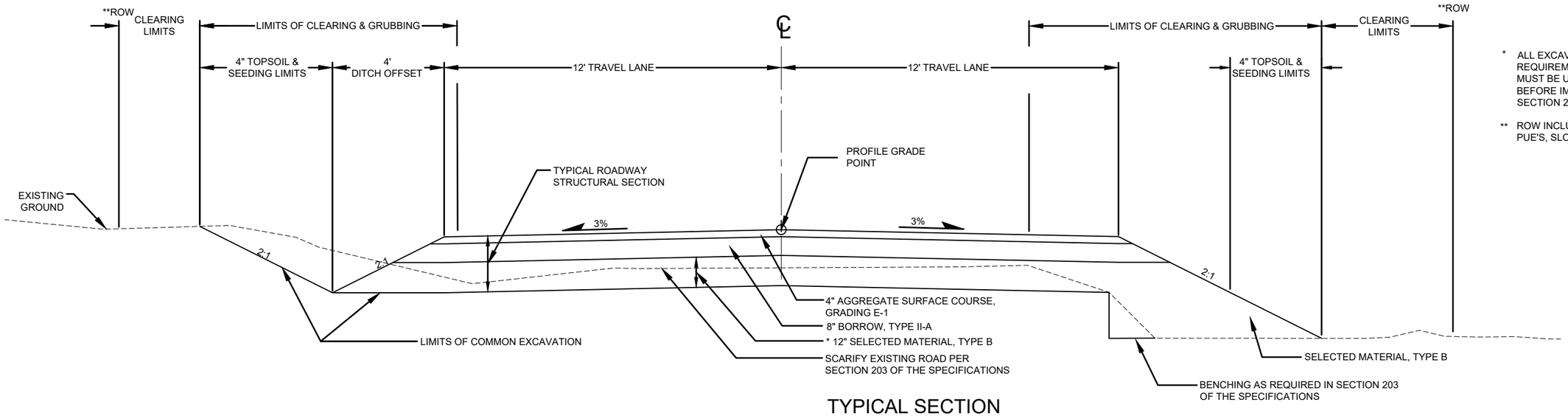

* ALL EXCAVATED MATERIALS MEETING THE REQUIREMENTS OF SELECTED MATERIAL, TYPE B MUST BE USED TO CONSTRUCT PROJECT FILLS BEFORE IMPORTING BORROW, TYPE B. SEE SECTION 203 OF THE SPECIFICATIONS.

** ROW INCLUDES ALL EASEMENTS (SECTION LINES, PUE'S, SLOPE, ETC.)

TYPICAL SECTION
CUT, FILL AND STRUCTURAL SECTION TYPICAL
BOTH SIDES OF ROADWAY
STA. 9+67 TO STA. 11+15
STA. 12+55 TO STA 13+84.4

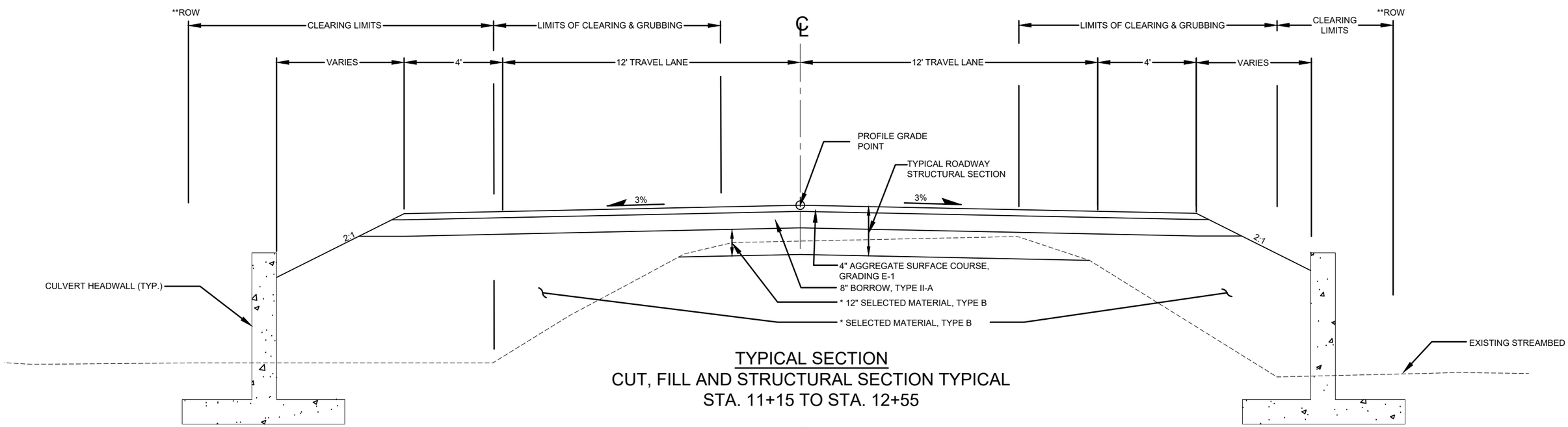

TYPICAL SECTION
CUT, FILL AND STRUCTURAL SECTION TYPICAL
STA. 11+15 TO STA. 12+55

STATE OF ALASKA 49TH STEVEN M KARI No. CE 9203 1/17/2020 REGISTERED PROFESSIONAL ENGINEER

BY	DATE	REVISION

Stantec
PLANS DEVELOPED BY:
STANTEC CONSULTING SERVICES INC.
351 W. Parks Hwy., Suite 200
Wasilla, Alaska 99654
Phone: (907) 376-7815
C.A. #126386

MARBLE WY AT COTTONWOOD CR. FISH PASSAGE
MATANUSKA-SUSITNA BOROUGH
TYPICAL SECTIONS

DATE: 1/17/2020
SHEET: B1 OF B1
PROJECT NUMBER: 18-14-1793

Designed By:
Drawn By:
Checked By:
Date Revised: 1/17/2020, 10:52 AM
Layout Name: Typical Sections
File Path and Name: U:\2047065400\drawing\C\sheets\18-14-1793 Marble Way at Cottonwood Creek Fish Passage Typical Sections.dwg

ESTIMATE OF QUANTITIES - BASIC BID

ITEM NO.	ITEM	UNIT	QUANTITY
201(3B)	CLEARING AND GRUBBING	LUMP SUM	ALL REQ'D
202(1)	REMOVAL OF STRUCTURES AND OBSTRUCTIONS	LUMP SUM	ALL REQ'D
202(4)	REMOVAL OF CULVERT PIPE	LINEAR FOOT	94
203(1)	COMMON EXCAVATION	CUBIC YARD	4,672
203(6)	BORROW, TYPE B	TON	1,649
203(19)	BORROW, TYPE II-A	TON	4,773
301(3)	AGGREGATE SURFACE COURSE, GRADING E-1	TON	339
501(1)	CLASS A CONCRETE	LUMP SUM	ALL REQ'D
602(2A)	STRUCTURAL PLATE PIPE-ARCH 12'-10" SPAN, 8'-4" RISE, 12 GAGE	LINEAR FOOT	70
602(2B)	STRUCTURAL PLATE PIPE-ARCH 18'-1" SPAN, 11'10" RISE, 10 GAGE	LINEAR FOOT	70
603(1-12)	12 INCH CSP	LINEAR FOOT	106
606(1)	W-BEAM GUARDRAIL	LINEAR FOOT	188
606(6)	REMOVING AND DISPOSING OF GUARDRAIL	LINEAR FOOT	100
606(11)	EXTRUDER TERMINAL (ET-2000)	EACH	4
615(2)	REMOVE AND RELOCATE EXISTING SIGN	EACH	7
615(6)	SALVAGE SIGN	EACH	6
618(2A)	SEEDING, TYPE A	POUND	61
620(1)	TOPSOIL	SQUARE YARD	1,700
639(1)	RESIDENCE DRIVEWAY	EACH	3
640(1)	MOBILIZATION AND DEMOBILIZATION	LUMP SUM	ALL REQ'D
641(1)	EROSION AND POLLUTION CONTROL ADMINISTRATION	LUMP SUM	ALL REQ'D
641(3)	TEMPORARY EROSION AND POLLUTION CONTROL	LUMP SUM	ALL REQ'D
642(1)	CONSTRUCTION SURVEYING	LUMP SUM	ALL REQ'D
642(2)	TWO PERSON SURVEY PARTY	HOUR	5
643(1)	TRAFFIC MAINTENANCE	LUMP SUM	ALL REQ'D
643(2)	PERMANENT CONSTRUCTION SIGNING	LUMP SUM	ALL REQ'D
671(1)	ROOTWAD INSTALLATION	LINEAR FOOT	40
671(2)	BRUSH LAYERING	LINEAR FOOT	60
671(3)	STREAM SUBSTRATE	CUBIC YARD	401
672(1)	STREAM DIVERSION AND DEWATERING	LUMP SUM	ALL REQ'D
800(1)	INTERIM WORK AUTHORIZATION	CONTINGENT SUM	ALL REQ'D

202(1) - REMOVAL OF STRUCTURES AND OBSTRUCTIONS

STATION	OFFSET		COMMENTS
	LEFT	RIGHT	
11+41.4 TO 11+81.1		X	SHEET METAL WALL HELD IN PLACE BY GUARDRAIL POSTS
11+66.5 LT. TO 12+15.2, RT.	-	-	SHEET METAL WALL HELD IN PLACE BY GUARDRAIL POSTS

501(1) CLASS A CONCRETE

HEADWALLS	ESTIMATED QUANTITY (C.Y.)
UPSTREAM	84
DOWNSTREAM	69
TOTAL	153

606 - GUARDRAIL SUMMARY

STATION TO STATION	OFFSET		606(1) W-BEAM GUARDRAIL (L.F.)	606(11) EXTRUDER TERMINAL (EA.)	COMMENTS
	LEFT	RIGHT			
10+66.5 TO 12+34.5		X	87.5	2	
11+21.2 TO 13+00.7	X		100	2	
TOTALS			187.5	4	

606(6) REMOVING AND DISPOSING OF GUARDRAIL

STATION TO STATION	LENGTH	COMMENTS
11+41.4, RT. TO 11+81.1, RT.	46	
11+66.5 LT. TO 12+15.2, RT.	54	
TOTALS	100	

615(2) - REMOVE AND RELOCATE EXISTING SIGN

SIGN NO.	EXISTING LOCATON			NEW LOCATION				LEGEND	POST	
	STATION	OFFSET (FT.)		STATION	OFFSET (FT.)		FACING TRAFFIC		TYPE	EMBEDMENT
		LEFT	RIGHT		LEFT	RIGHT				
1	11+45.6		6.0	11+10.3		17.6	EB	F & G SIGN	EXISTING	SOIL
2	11+54.5		3.5	10+66.5		15.5	EB	OBJECT MARKER	EXISTING	SOIL
3	11+79.6	9.9		11+21.0	15.5		EB	OBJECT MARKER	EXISTING	SOIL
4	11+90.8		26.0	12+34.0		15.5	WB	OBJECT MARKER	EXISTING	SOIL
5	12+16.0		34.3	12+46.0	16.2		WB	COTTONWOOD CR - SALMON INFO	EXISTING	SOIL
6	12+25.3	8.7		13+00.0	15.5		WB	OBJECT MARKER	EXISTING	SOIL
7	13+60.6	16.4		13+50.0	20.4		WB	20 MPH	EXISTING	SOIL
TOTAL		7								

615(6) - SALVAGE SIGN

STATION	OFFSET		LEGEND	REMARKS
	LEFT	RIGHT		
9+83.4		X	ONE LANE BRIDGE	
10+49.6	X		CHEVRON	
10+80.5	X		CHEVRON	
12+45.4	X		CHEVRON	
12+65.7	X		CHEVRON	
13+40.9	X		ONE LANE BRIDGE	
TOTAL	6			

639(1) - RESIDENCE DRIVEWAY SUMMARY

STATION	OFFSET		WIDTH (FT.)	RADIUS (FT.)		603(1-12) (L.F.)	APPROX. MATCH GRADE	COMMENTS
	LEFT	RIGHT		LEFT	RIGHT			
10+37.5		X	10	6	6	20	8.30%	
12+78.0		X	40	6	6	50	-7.05%	
12+49.7		X	24	6	6	36	3.55%	
TOTALS	3					106		

STATE OF ALASKA 49TH STEVEN M KARI No. CE 9203 1/17/2020 REGISTERED PROFESSIONAL ENGINEER

BY	DATE	REVISION

Stantec
PLANS DEVELOPED BY:
STANTEC CONSULTING SERVICES INC.
351 W. Parks Hwy., Suite 200
Wasilla, Alaska 99654
Phone: (907) 376-7815
C.A. #126386

MARBLE WY AT COTTONWOOD CR. FISH PASSAGE
MATANUSKA-SUSITNA BOROUGH
ESTIMATE OF QUANTITIES & SUMMARY TABLES

DATE: 1/17/2020
SHEET: C1 OF C2
PROJECT NUMBER: 18-14-1793

Date Revised: 1/17/2020, 10:52 AM
Layout Name: Estimate of Quantities and Summary Tables
File Path and Name: U:\204765400\drawing\C\sheets\18-14-1793 Marble Way at Cottonwood Creek Fish Passage Estimate of Quantities and Summary Tables.dwg
Designed By:
Drawn By:

EARTHWORK SUMMARY

LOCATION		EXCAVATION		EMBANKMENT	MISC.	
SHEET	STATION TO STATION	COMMON EXCAVATION (C.Y.)	WASTE (C.Y.)	SELECTED MATERIAL, TYPE "B" (C.Y.)	BORROW, TYPE II-A (C.Y.)	AGGREGATE SURFACE COURSE, GRADING E-1 (C.Y.)
F1	9+67.07 TO 13+84.40	2472	2472	767	2232	147
DRIVEWAYS	VARIES	0	0	4	0	7
DIVERSON CHANNEL	11+75 TO 12+20	2200	0	0	0	0
SUB-TOTALS		4672	2472	771	2232	154
TOTALS		4672	2472	771	2232	154
		C.Y.	C.Y.	C.Y.	C.Y.	C.Y.
BID QUANTITIES		COMMON EXCAVATION		BORROW, TYPE "B"	BORROW, TYPE II-A	AGGREGATE SURFACE COURSE, GRADING E-1
		4672		1649	4773	339
		(C.Y.)		(TON)	(TON)	(TON)

EARTHWORKS SUMMARY NOTES

1. COMMON EXCAVATION QUANTITIES = CROSS SECTION END AREA COMPUTED VOLUMES.
2. BID QUANTITIES FOR BORROW, TYPE B, BORROW, TYPE II-A AND AGGREGATE SURFACE COURSE, GRADING E-1 = NEATLINE * ESTIMATING FACTOR * 1.1 RESPECTIVELY.

BASIS OF ESTIMATE

ITEM	ITEM NO.	ESTIMATING FACTOR
BORROW, TYPE B	203(5)	144 LBS./C.F.
BORROW, TYPE II-A	203(19)	144 LBS./C.F.
AGGREGATE SURFACE COURSE, GRADING E-1	301(4)	148 LBS./C.F.

STATE OF ALASKA 49TH STEVEN M KARI No. CE 9203 1/17/2020 REGISTERED PROFESSIONAL ENGINEER

BY	DATE	REVISION

Stantec
PLANS DEVELOPED BY:
STANTEC CONSULTING SERVICES INC.
351 W. Parks Hwy., Suite 200
Wasilla, Alaska 99654
Phone: (907) 376-7815
C.A. #126386

MARBLE WY AT COTTONWOOD CR. FISH PASSAGE
MATANUSKA-SUSITNA BOROUGH
ESTIMATE OF QUANTITIES & SUMMARY TABLES

DATE: 1/17/2020
SHEET: C2 OF C2
PROJECT NUMBER: 18-14-1793

Date Revised: 1/17/2020, 10:52 AM
Layout Name: Estimate of Quantities and Summary Tables (2)
File Path and Name: U:\204765400\drawing\C\sheets\18-14-1793 Marble Way at Cottonwood Creek Fish Passage Estimate of Quantities and Summary Tables.dwg
Designed By:
Drawn By:

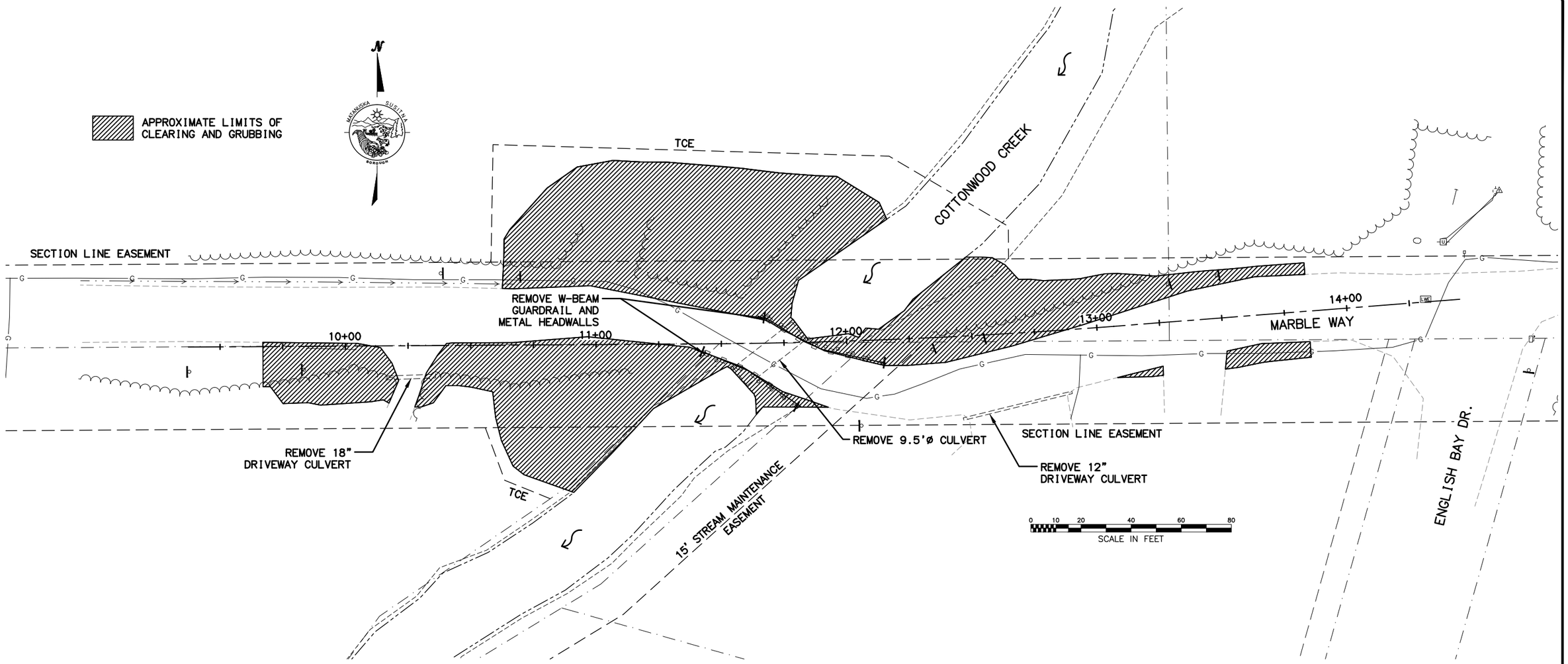

DEMOLITION PLAN

Date Revised:	1/17/2020, 10:52 AM
Layout Name:	Demolition Plan
File Path and Name:	U:\2047065400\drawing\C\sheets\18-14-1793 Marble Way at Cottonwood Creek Fish Passage Demolition Plan.dwg

Designed By:
Drawn By:
Checked By:

STATE OF ALASKA 49TH STEVEN M KARI No. CE 9203 1/17/2020 REGISTERED PROFESSIONAL ENGINEER

BY	DATE	REVISION

Stantec

PLANS DEVELOPED BY:
STANTEC CONSULTING SERVICES INC.
351 W. Parks Hwy., Suite 200
Wasilla, Alaska 99654
Phone: (907) 376-7815
C.A. #126386

MARBLE WY AT COTTONWOOD CR. FISH PASSAGE
MATANUSKA-SUSITNA BOROUGH

DEMOLITION PLAN

DATE: 1/17/2020
SHEET: E1 OF E8
PROJECT NUMBER: 18-14-1793

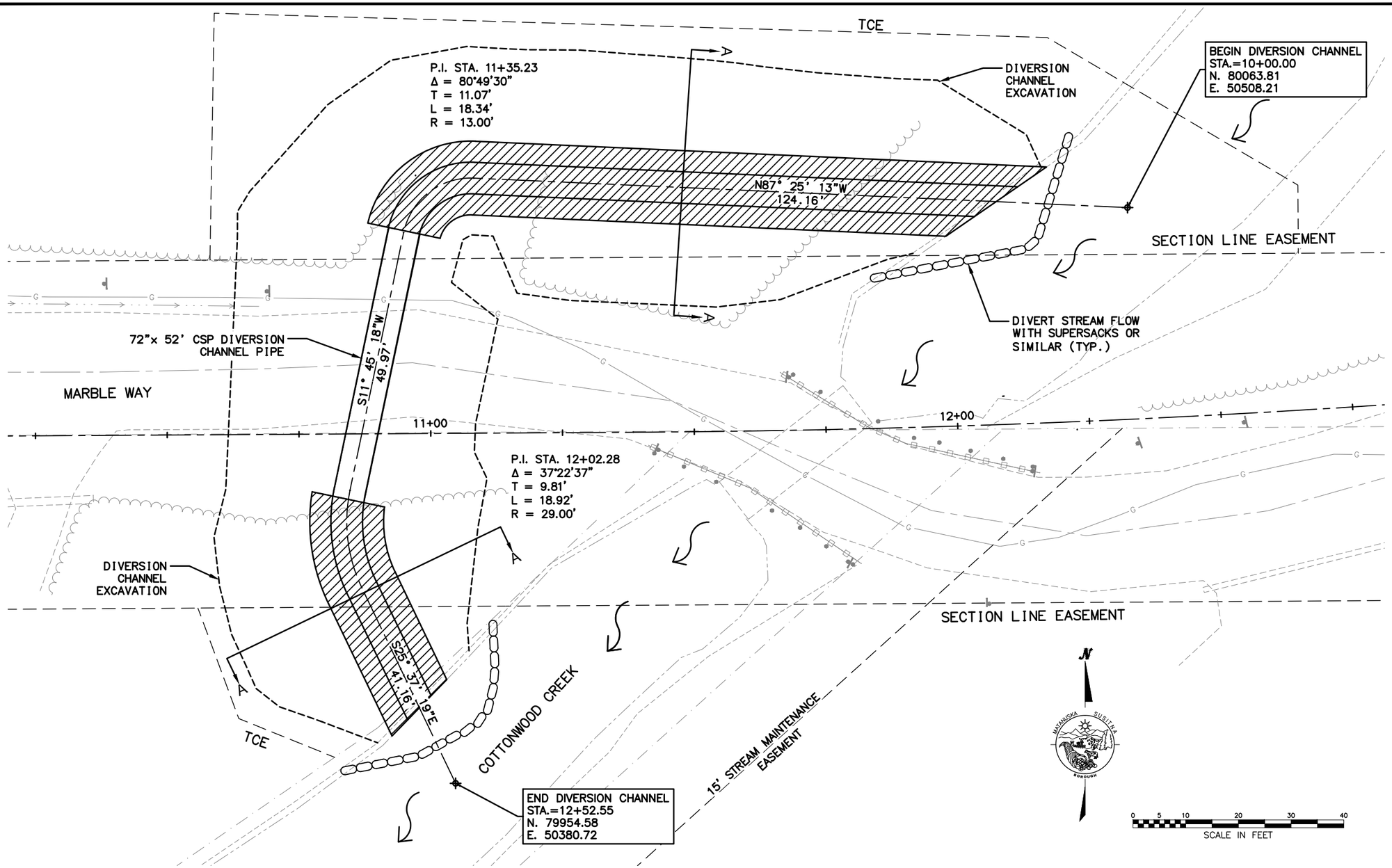

PHASE 1 DIVERSION PLAN
DIVERSION CHANNEL CONSTRUCTION

PHASE 1 NOTES:

1. PLACE BARRICADES AND IMPLEMENT TEMPORARY TRAFFIC CONTROL PLAN.
2. IF AN ALTERNATE CHANNEL SHAPE IS PROPOSED, IT MUST BE CAPABLE OF CARRYING A PEAK STREAM FLOW OF 100 CUBIC FEET PER SECOND (CFS) DURING THE CONSTRUCTION PERIOD.
3. DURING EXCAVATION, THE DIVERSION CHANNEL MUST BE ISOLATED FROM THE STREAM TO BE DIVERTED AT THE UPSTREAM AND DOWNSTREAM ENDS OF THE DIVERSION CHANNEL.
4. THE BED AND BANKS OF THE DIVERSION CHANNEL MUST BE CONSTRUCTED OF MATERIAL THAT WILL NOT ERODE AT EXPECTED FLOWS. IN MOST CASES, THE DIVERSION CHANNEL SHOULD BE COMPLETELY LINED WITH FILTER FABRIC, VISQUEEN OR SOME OTHER SIMILAR MATERIAL. SEAMS IN THE LINER SHOULD BE OVERLAPPED, WITH THE OPENING FACING DOWNSTREAM. THE CHANNEL LINER SHOULD BE ANCHORED WITH ROCKS OR SANDBAGS TO HOLD IT IN PLACE.
5. CONTRACTOR TO ENSURE TRANSITION FROM THE DIVERSION CHANNEL INTO AND OUT OF PIPE IS SECURE, AND EROSION AND PIPING ARE AVOIDED DURING THE ENTIRE DIVERSION PERIOD.

STATE OF ALASKA 49TH STEVEN M KARI No. CE 9203 1/17/2020 REGISTERED PROFESSIONAL ENGINEER

BY	DATE	REVISION

Stantec
PLANS DEVELOPED BY:
STANTEC CONSULTING SERVICES INC.
351 W. Parks Hwy., Suite 200
Wasilla, Alaska 99654
Phone: (907) 376-7815
C.A. #126386

MARBLE WY AT COTTONWOOD CR. FISH PASSAGE
MATANUSKA-SUSITNA BOROUGH
DIVERSION PLAN

DATE: 1/17/2020
SHEET: E2 OF E8
PROJECT NUMBER: 18-14-1793

Date Revised: 1/17/2020, 10:52 AM
Layout Name: Diversion Plan
File Path and Name: U:\2047065400\drawing\C\sheets\18-14-1793 Marble Way at Cottonwood Creek Fish Passage Diversion Channel Design.dwg
Designed By:
Drawn By:
Checked By:

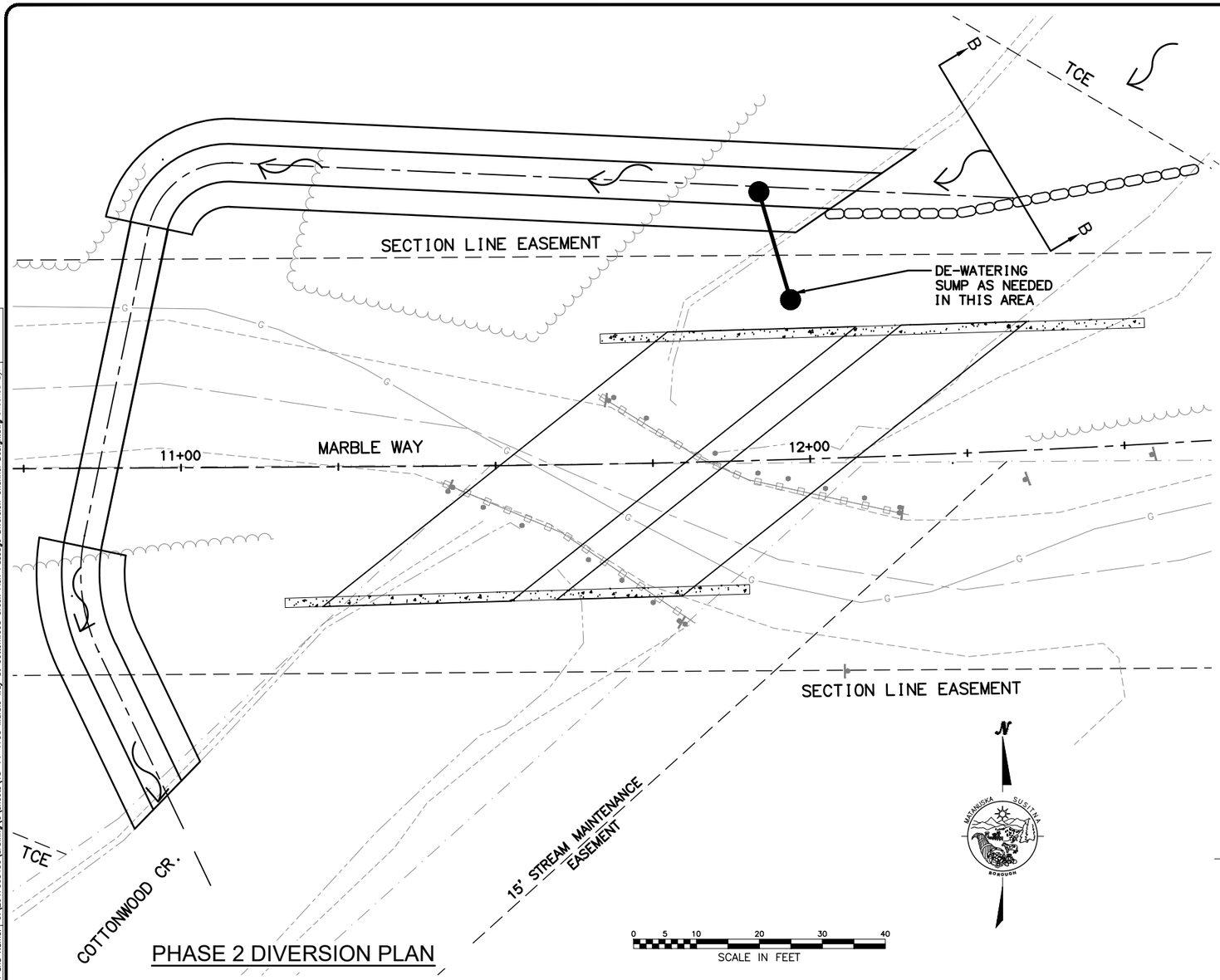

PHASE 2 DIVERSION PLAN

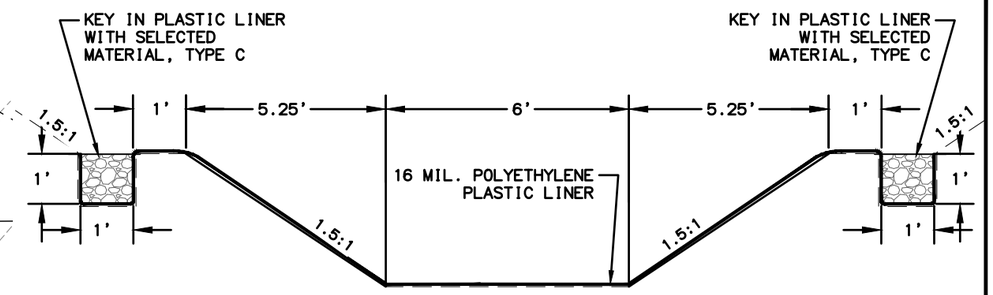

SECTION A-A
DIVERSION CHANNEL
NTS

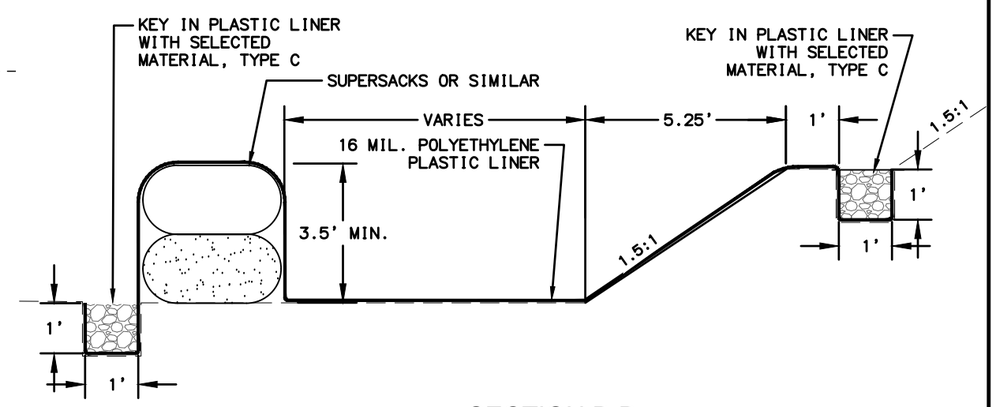

SECTION B-B
STREAM DIVERSION
NTS

PHASE 2 NOTES:

1. DIVERSION OF FLOW INTO THE DIVERSION CHANNEL MUST BE CONDUCTED BY FIRST REMOVING THE DOWNSTREAM PLUG, THEN REMOVING THE UPSTREAM PLUG, THEN CLOSING THE UPSTREAM END, AND THEN THE DOWNSTREAM END OF THE NATURAL CHANNEL OF THE DIVERTED STREAM.
2. RE–DIVERSON OF FLOW INTO THE NATURAL STREAM CHANNEL MUST BE CONDUCTED BY REMOVING THE DOWNSTREAM PLUG FROM THE NATURAL CHANNEL, AND THEN THE UPSTREAM PLUG, THEN CLOSING THE UPSTREAM END, AND THEN THE DOWNSTREAM END OF THE DIVERSION CHANNEL.
3. ALL MAN–MADE MATERIALS SHALL BE REMOVED FROM THE DIVERSION CHANNEL, THE CHANNEL SHALL THEN BE BACKFILLED, AND THE STREAM BANKS STABILIZED. ALL DISTURBED AREAS SHALL BE RE–VEGETATED WITH NATURALLY OCCURRING WOODY PLANTS AND GRASSES TO PREVENT SEDIMENTATION AND EROSION.
4. FISH THAT BECOME STRANDED IN DE–WATERED CHANNELS MUST BE IMMEDIATELY CAPTURED AND RETURNED TO THE ACTIVE CHANNEL WITHOUT FURTHER HARM.
5. IF A TRIBUTARY STREAM ENTERS THE FORMER CHANNEL WITHIN THE DIVERSION AREA, CONNECT IT IN A SUITABLE MANNER TO THE NEW CHANNEL.
6. FISH PASSAGE IN THE TEMPORARY DIVERSION CHANNEL MUST BE MAINTAINED AT ALL TIMES UNLESS OTHERWISE APPROVED BY THE ADF&G, DIVISION OF HABITAT.
7. DE–WATER TRENCH AND WORK AREA WITH PUMP(S) IF REQUIRED AND APPROVED BY THE ENGINEER.
8. ALL DISCHARGE POINTS REQUIRE PERMANENT OR TEMPORARY VELOCITY CONTROLS.
9. PROVIDE SEDIMENT REMOVAL FOR ALL DE–WATERING ACTIVITY PRIOR TO DISCHARGE FROM THE PROJECT INTO ANY WATER OF THE U.S.

STATE OF ALASKA 49TH STEVEN M KARI No. CE 9203 1/17/2020 REGISTERED PROFESSIONAL ENGINEER

BY	DATE	REVISION

Stantec
PLANS DEVELOPED BY:
STANTEC CONSULTING SERVICES INC.
351 W. Parks Hwy., Suite 200
Wasilla, Alaska 99654
Phone: (907) 376-7815
C.A. #126386

MARBLE WY AT COTTONWOOD CR. FISH PASSAGE
MATANUSKA–SUSITNA BOROUGH
DIVERSION PLAN

DATE: 1/17/2020
SHEET: E3 OF E8
PROJECT NUMBER: 18–14–1793

Designed By:
Drawn By:
Checked By:
Date Revised: 1/17/2020, 10:52 AM
Layout Name: Diversion Plan (2)
File Path and Name: U:\204706540\drawing\C\sheets\18-14-1793 Marble Way at Cottonwood Creek Fish Passage Diversion Channel Design.dwg

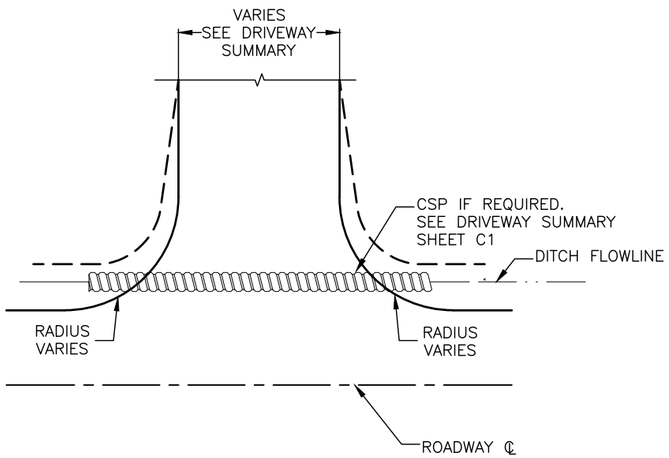

DRIVEWAY PLAN VIEW DETAIL
CUT

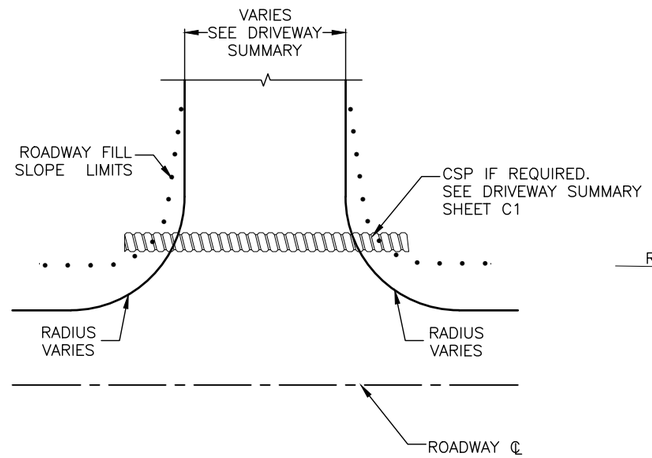

DRIVEWAY PLAN VIEW DETAIL
FILL

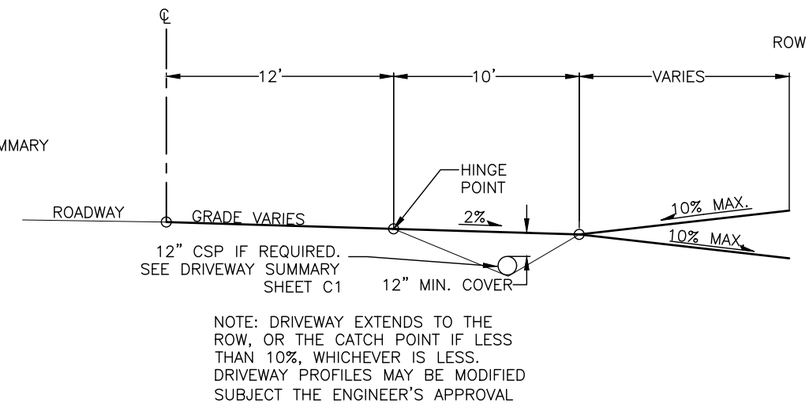

DRIVEWAY PROFILE DETAIL

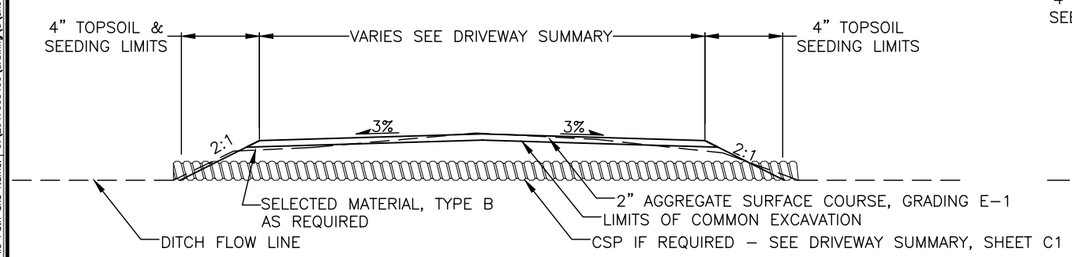

DRIVEWAY SECTION DETAIL
CUT

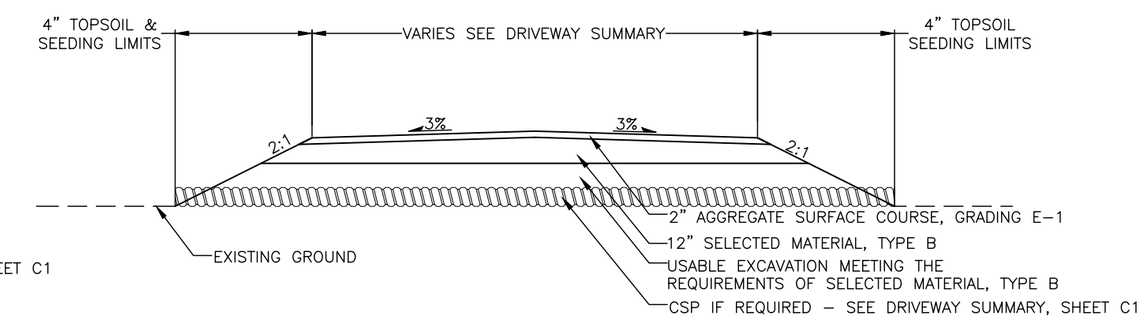

DRIVEWAY SECTION DETAIL
FILL

STATE OF ALASKA 49TH STEVEN M KARI No. CE 9203 1/17/2020 REGISTERED PROFESSIONAL ENGINEER

BY	DATE	REVISION

Stantec
PLANS DEVELOPED BY:
STANTEC CONSULTING SERVICES INC.
351 W. Parks Hwy., Suite 200
Wasilla, Alaska 99654
Phone: (907) 376-7815
C.A. #126386

MARBLE WY AT COTTONWOOD CR. FISH PASSAGE
MATANUSKA-SUSITNA BOROUGH
DETAILS

DATE: 1/17/2020
SHEET: E4 OF E8
PROJECT NUMBER: 18-14-1793

Designed By:
Drawn By:
Checked By:
Date Revised: 1/17/2020, 10:53 AM
Layout Name: Miscellaneous Details
File Path and Name: U:\204706540\drawing\C\sheets\18-14-1793 Marble Way at Cottonwood Creek Fish Passage Misc Details.dwg

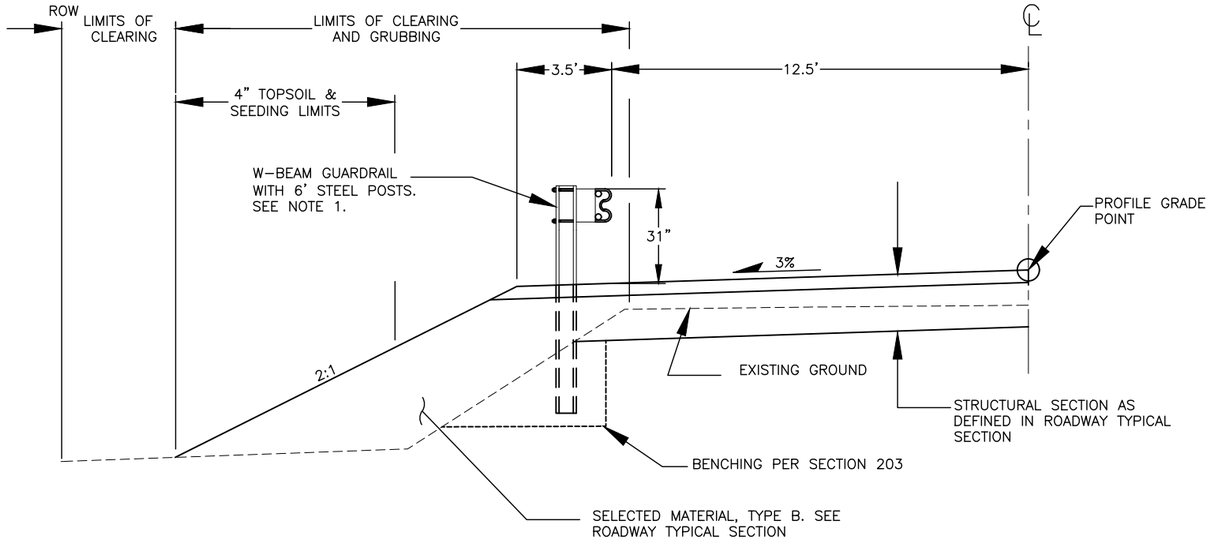

NOTES:

1. CONTACTOR SHALL AUGER IN HOLES FOR STEEL GUARDRAIL POST TO AVOID DAMAGE TO CULVERTS. DAMAGE TO CULVERTS AS A RESULT OF GUARDRAIL INSTALLATION SHALL BE REPAIRED BY THE CONTRACTOR AT NO EXPENSE TO THE MSB.

GUARDRAIL INSTALLATION DETAIL

TYPICAL BOTH SIDES OF ROADWAY

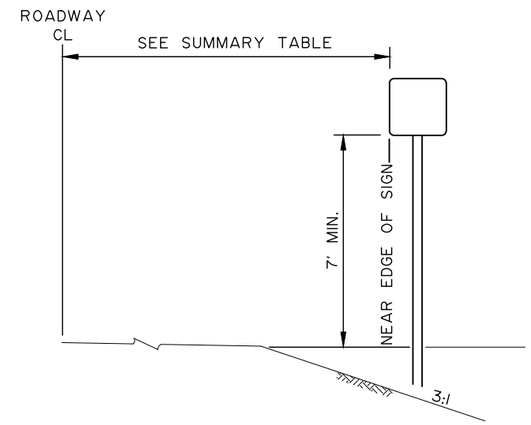

TYPICAL SIGN INSTALLATION DETAIL

STATE OF ALASKA
49TH
STEVEN M KARI
No. CE 9203
1/17/2020
REGISTERED PROFESSIONAL ENGINEER

BY	DATE	REVISION

Stantec
PLANS DEVELOPED BY:
STANTEC CONSULTING SERVICES INC.
351 W. Parks Hwy., Suite 200
Wasilla, Alaska 99654
Phone: (907) 376-7815
C.A. #126386

MARBLE WY AT COTTONWOOD CR. FISH PASSAGE
MATANUSKA-SUSITNA BOROUGH
DETAILS

DATE: 1/17/2020
SHEET: E5 OF E8
PROJECT NUMBER: 18-14-1793

Designed By:
Drawn By:
Checked By:
Date Revised: 1/17/2020, 10:53 AM
Layout Name: Miscellaneous Details (2)
File Path and Name: U:\204706540O\drawing\C\sheets\18-14-1793 Marble Way at Cottonwood Creek Fish Passage Misc Details.dwg

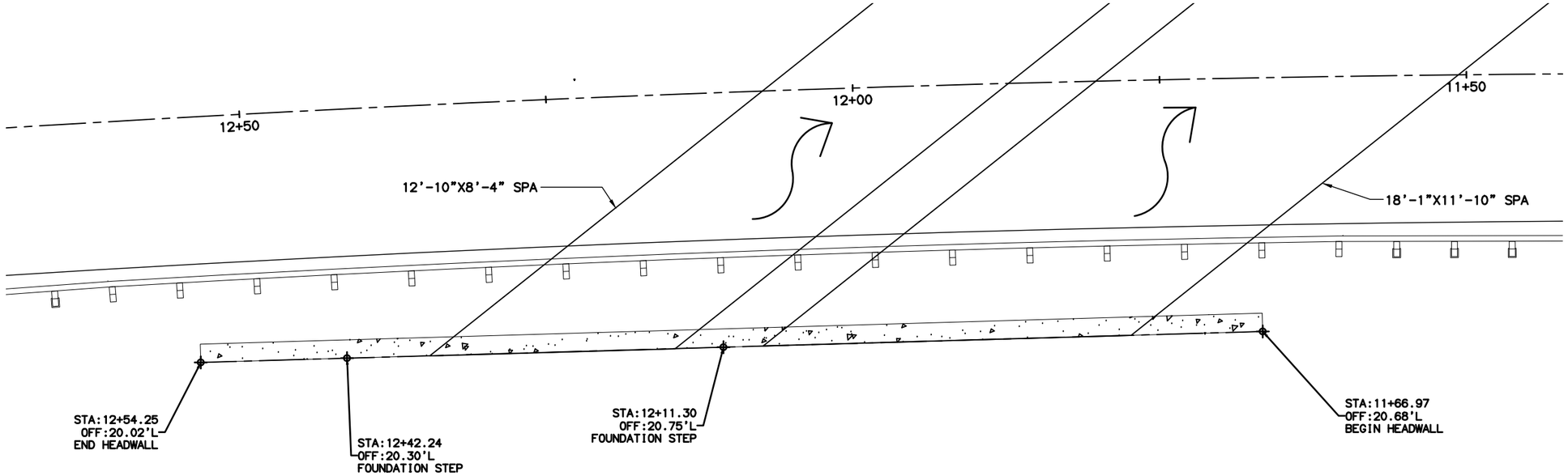

UPSTREAM HEADWALL PLAN

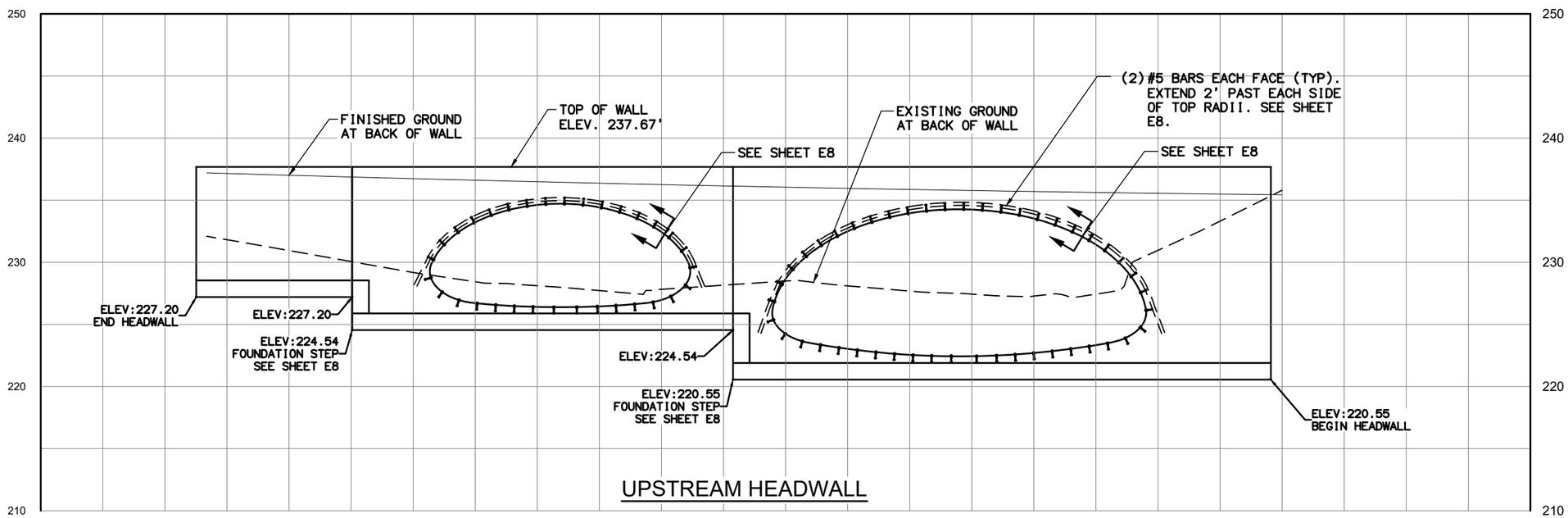

UPSTREAM HEADWALL

STATE OF ALASKA
49TH
STEVEN M KARI
No. CE 9203
1/17/2020
REGISTERED PROFESSIONAL ENGINEER

BY	DATE	REVISION

Stantec

PLANS DEVELOPED BY:
STANTEC CONSULTING SERVICES INC.
351 W. Parks Hwy., Suite 200
Wasilla, Alaska 99654
Phone: (907) 376-7815
C.A. #126386

MARBLE WY AT COTTONWOOD CR. FISH PASSAGE
MATANUSKA-SUSITNA BOROUGH

HEADWALL DETAILS

DATE: 1/17/2020
SHEET: E6 OF E8
PROJECT NUMBER: 18-14-1793

Designed By:
Drawn By:
Checked By:

Date Revised: 1/17/2020, 10:53 AM
Layout Name: Upstream Headwall
File Path and Name: U:\204706540\drawing\C\sheets\18-14-1793 Marble Way at Cottonwood Creek Fish Passage Headwall Details.dwg

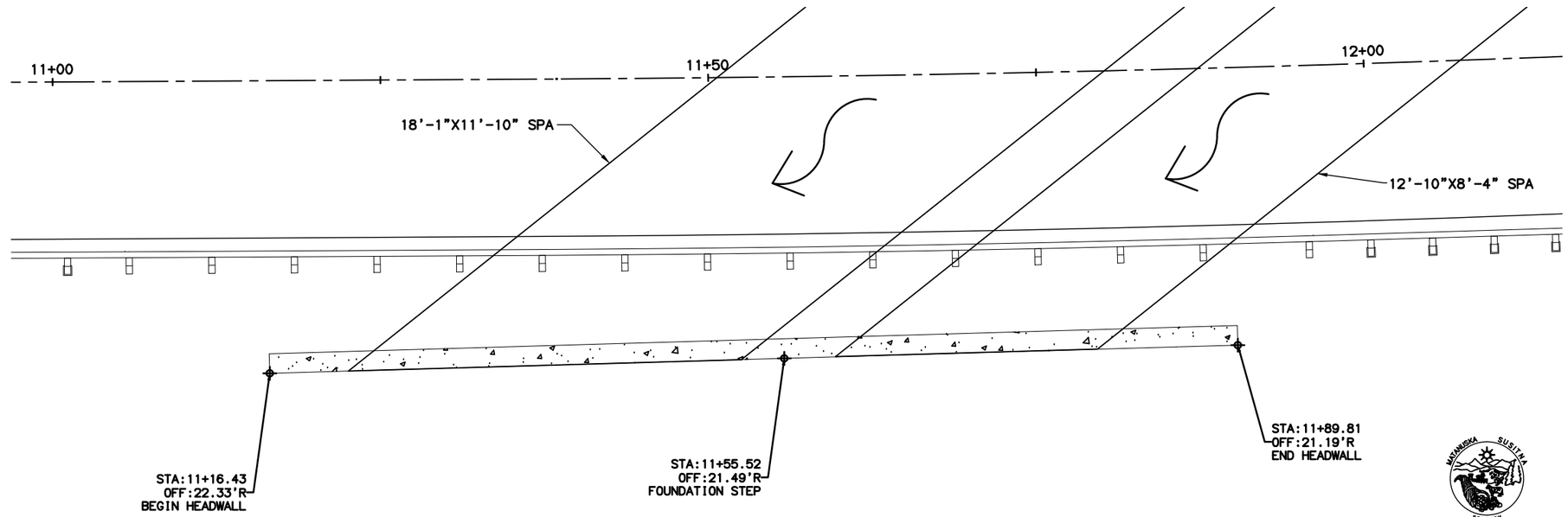

DOWNSTREAM HEADWALL PLAN

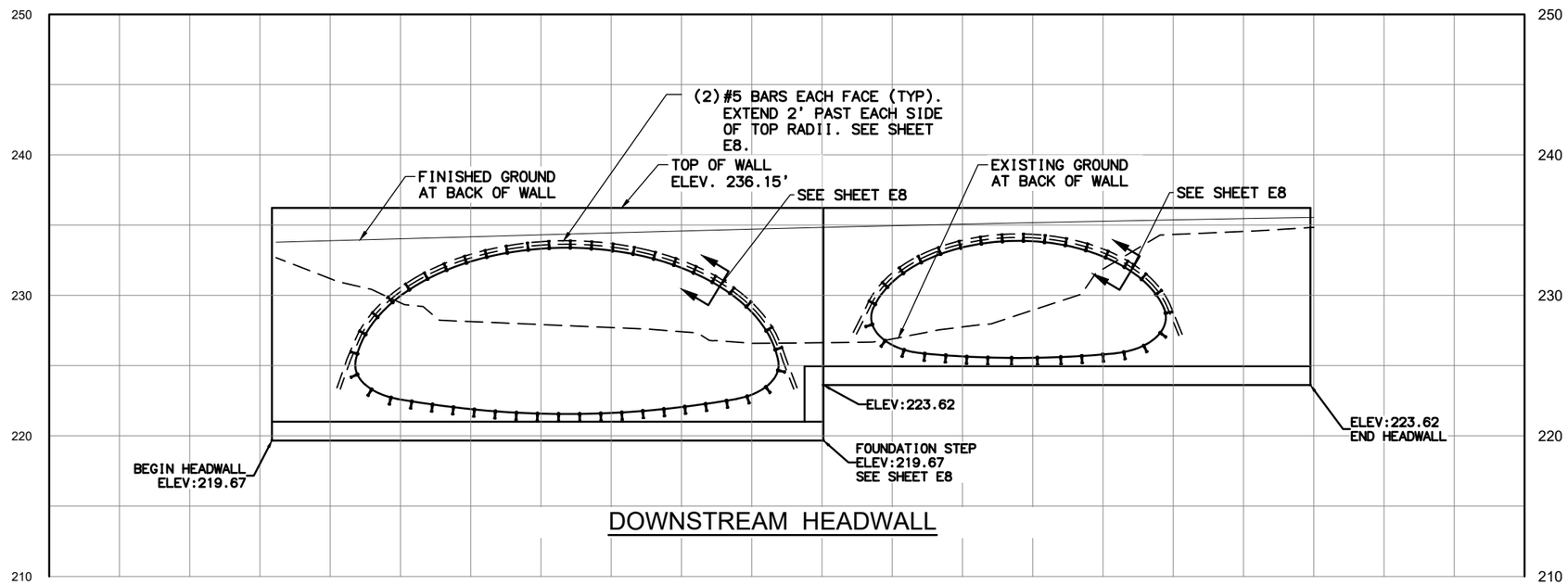

DOWNSTREAM HEADWALL

STATE OF ALASKA
49TH
STEVEN M KARI
No. CE 9203
1/17/2020
REGISTERED PROFESSIONAL ENGINEER

BY	DATE	REVISION

Stantec

PLANS DEVELOPED BY:
STANTEC CONSULTING SERVICES INC.
351 W. Parks Hwy., Suite 200
Wasilla, Alaska 99654
Phone: (907) 376-7815
C.A. #126386

MARBLE WY AT COTTONWOOD CR. FISH PASSAGE
MATANUSKA-SUSITNA BOROUGH

HEADWALL DETAILS

DATE: 1/17/2020
SHEET: E7 OF E8
PROJECT NUMBER: 18-14-1793

Designed By:
Drawn By:
Checked By:

Date Revised: 1/17/2020, 10:53 AM
Layout Name: Downstream Headwall
File Path and Name: U:\204706540\0\drawing\C\sheets\18-14-1793 Marble Way at Cottonwood Creek Fish Passage Headwall Details.dwg

GENERAL STRUCTURAL NOTES

(APPLIES UNLESS NOTED OTHERWISE)

DESIGN LOADS:

SOIL LOADS:

SOIL BEARING PRESSURE	3,000 PSF
SOIL FRICTION ANGLE	40°
ACTIVE SOIL PRESSURE AT HEEL	91.9 PSF/FT
ACTIVE SOIL PRESSURE AT TOE	91.9 PSF/FT
PASSIVE PRESSURE	438 PSF/FT

RETAINING WALL DESIGNED TO HAVE PROPER DRAINAGE WITH NO HYDROSTATIC PRESSURE PRESENT.

CONCRETE:

TYPICAL CONCRETE COMPRESSIVE STRENGTHS		
CONCRETE	MINIMUM 28 DAY COMPRESSIVE STRENGTH	SLUMP AT PLACEMENT
UNLESS NOTED OTHERWISE, ALL CONCRETE SHALL BE	CLASS A	4" MAXIMUM

ADDITION OF WATER TO THE BATCH FOR MATERIAL WITH INSUFFICIENT SLUMP WILL NOT BE PERMITTED.

REINFORCING:

TYPICAL CLEAR CONCRETE COVERAGE		
CONCRETE CAST AGAINST AND PERMANENTLY EXPOSED TO EARTH		3"
FORMED CONCRETE EXPOSED TO EARTH OR WEATHER	#6 AND LARGER	2"
	#5 AND SMALLER	1 1/2"
ALL OTHERS PER LATEST EDITION OF ACI 318.		

LAP SPLICES IN CONCRETE:
CONCRETE CONTAINING SUPERPLASTICIZING ADMIXTURE SHALL HAVE A SLUMP NOT EXCEEDING 3", TO BE FIELD VERIFIED, PRIOR TO ADDING ADMIXTURE, AND NOT EXCEEDING 8" AT PLACEMENT.

ALL SPLICE LOCATIONS SUBJECT TO APPROVAL. PROVIDE BENT CORNER BARS TO MATCH AND LAP WITH HORIZONTAL BARS AT CORNERS AND INTERSECTIONS OF FOOTINGS AND WALLS. REINFORCING BAR SPACINGS GIVEN ARE MAXIMUM ON CENTERS (O.C.). SECURELY TIE ALL BARS IN LOCATION BEFORE PLACING CONCRETE. CONCRETE COLUMN DOWEL EMBEDMENT SHALL BE A STANDARD COMPRESSION DOWEL EMBEDMENT LENGTH ACCORDING TO THE LATEST EDITION OF ACI 318.

MINIMUM INSPECTIONS:

THE MINIMUM INSPECTING AND TESTING IS REQUIRED:

CONCRETE: DURING TAKING OF SPECIMENS AND PLACEMENT OF ALL CONCRETE. SAMPLE (2) SETS OF CYLINDERS EVERY 50 CUBIC YARDS OF CONCRETE. PERFORM STRENGTH TESTING AT 7 AND 28 DAYS: SLUMP, AIR CONTENT, AND TEMPERATURE TESTING.

BOLTS INSTALLED IN CONCRETE: PRIOR TO AND DURING THE PLACEMENT OF CONCRETE AROUND BOLTS.

REINFORCING STEEL: DURING PLACEMENT OF REINFORCING STEEL.

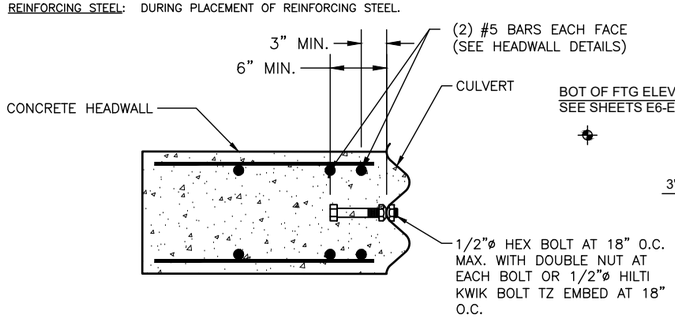

SECTION A-A
CULVERT/HEADWALL CONNECTION

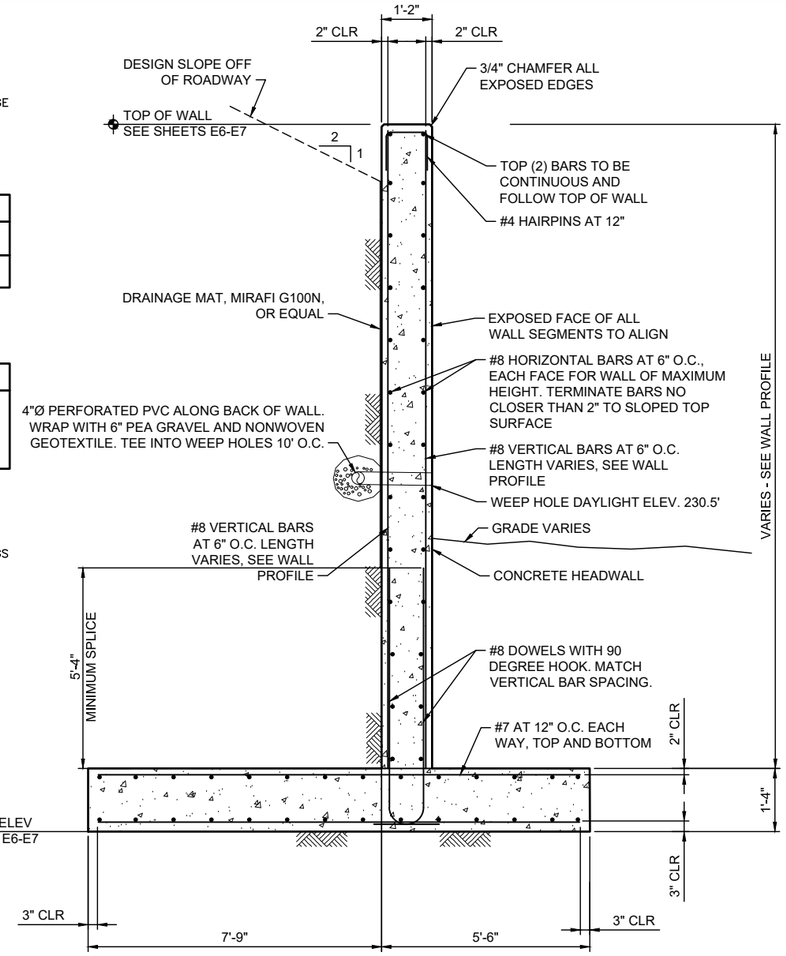

TYPICAL WALL SECTION

MINIMUM SPLICE CONCRETE	
BAR SIZE	SLICE LENGTH
#3	18"
#4	24"
#5	30"
#6	36"
#7	42"
#8	48"
#9	54"

TYPICAL REBAR SPLICE LENGTHS

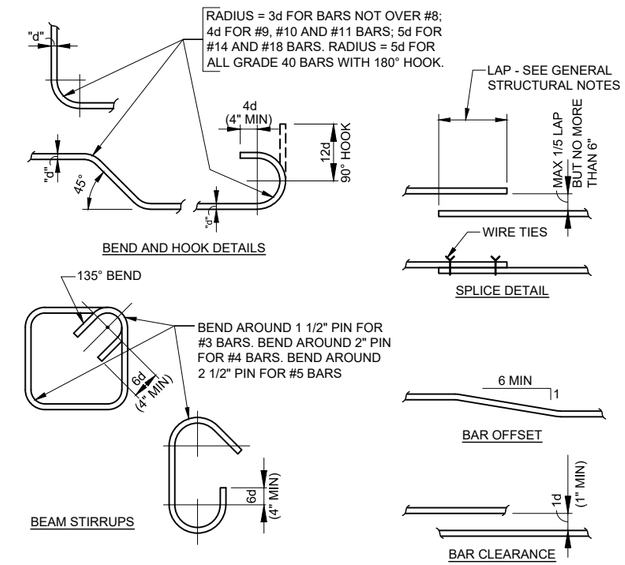

TYPICAL REBAR DETAILS

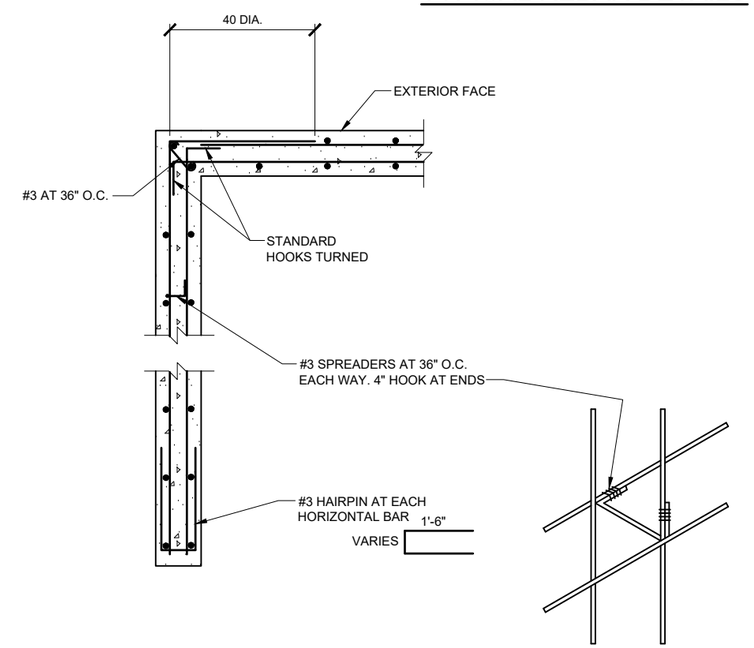

TYPICAL CORNER REINFORCING IN CONCRETE - 2 LAYERS

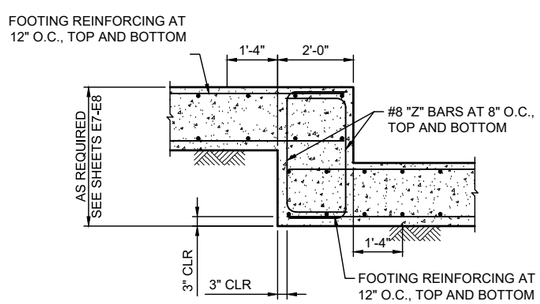

TYPICAL FOUNDATION STEP

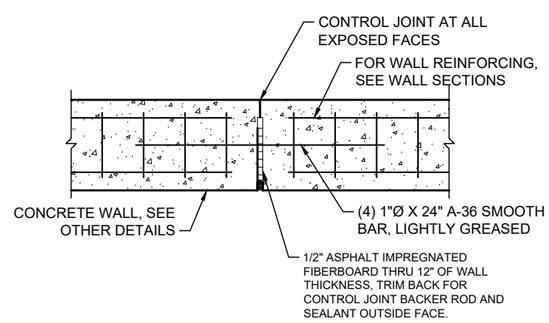

TYPICAL CONTROL JOINT

STATE OF ALASKA 49TH Bruce E. Hoeper CE-7745 1/17/2020 REGISTERED PROFESSIONAL ENGINEER

BY	DATE	REVISION

Stantec
PLANS DEVELOPED BY:
STANTEC CONSULTING SERVICES INC.
351 W. Parks Hwy., Suite 200
Wasilla, Alaska 99654
Phone: (907) 376-7815
C.A. #126386

MARBLE WY AT COTTONWOOD CR. FISH PASSAGE
MATANUSKA-SUSITNA BOROUGH
HEADWALL DETAILS

DATE: 1/17/2020
SHEET: E8 OF E8
PROJECT NUMBER: 18-14-1793

Designed By:
Drawn By:
Checked By:
Date Revised: 1/17/2020, 10:53 AM
Layout Name: Headwall Details2
File Path and Name: U:\2047065400\drawing\C\sheets\18-14-1793 Marble Way at Cottonwood Creek Fish Passage Headwall Details2.dwg

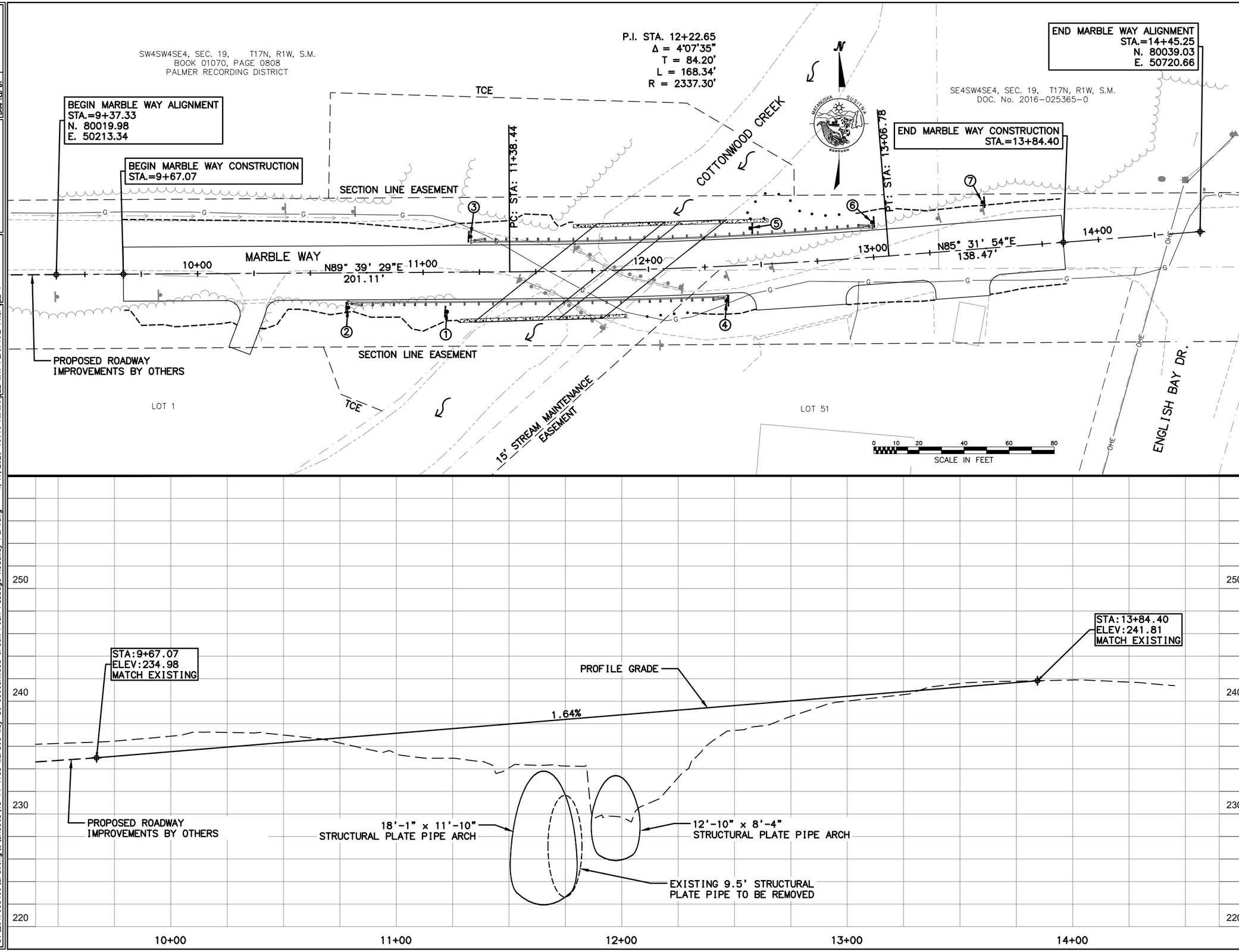

SHEET NO.	TOTAL SHEETS
F1	F3
STATE	DATE
ALASKA	1/17/2020

PROJECT DESIGNATION

18-14-1793

REVISIONS

NO.	DATE	DESCRIPTION

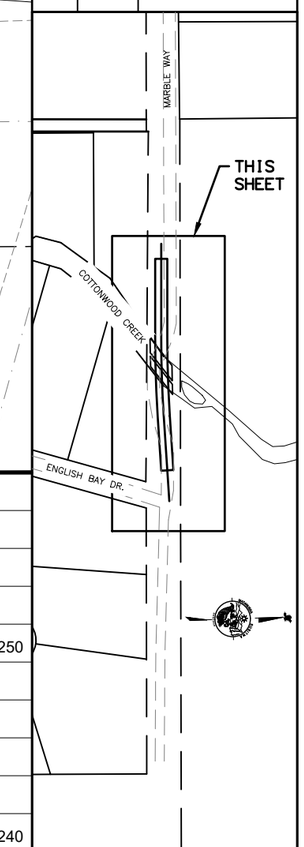

STATE OF ALASKA
49TH
STEVEN M KARI
No. CE 9203
1/17/2020
REGISTERED PROFESSIONAL ENGINEER

Stantec

PLANS DEVELOPED BY:
STANTEC CONSULTING SERVICES INC.
351 W. Parks Hwy., Suite 200
Wasilla, Alaska 99654
Phone: (907) 376-7815
C.A. #126386

MATANUSKA-SUSITNA BOROUGH
DEPARTMENT OF PUBLIC WORKS
OPERATIONS AND MAINTENANCE DIVISION

MARBLE WAY AT COTTONWOOD CREEK FISH PASSAGE

MARBLE WAY
PLAN & PROFILE

DESIGNED BY
CHECKED BY
DRAFTED BY
XREFS
SCALE
LAYOUT
MARBLE WAY PLAN AND PROFILE-1
DATE TIME
1/17/2020 10:10 AM
DRAWING LOCATION
u:\204706540 0\drawing\C\sheets\18-14-1793 Marble Way at Cottonwood Creek Fish Passage Roadway P&P.dwg

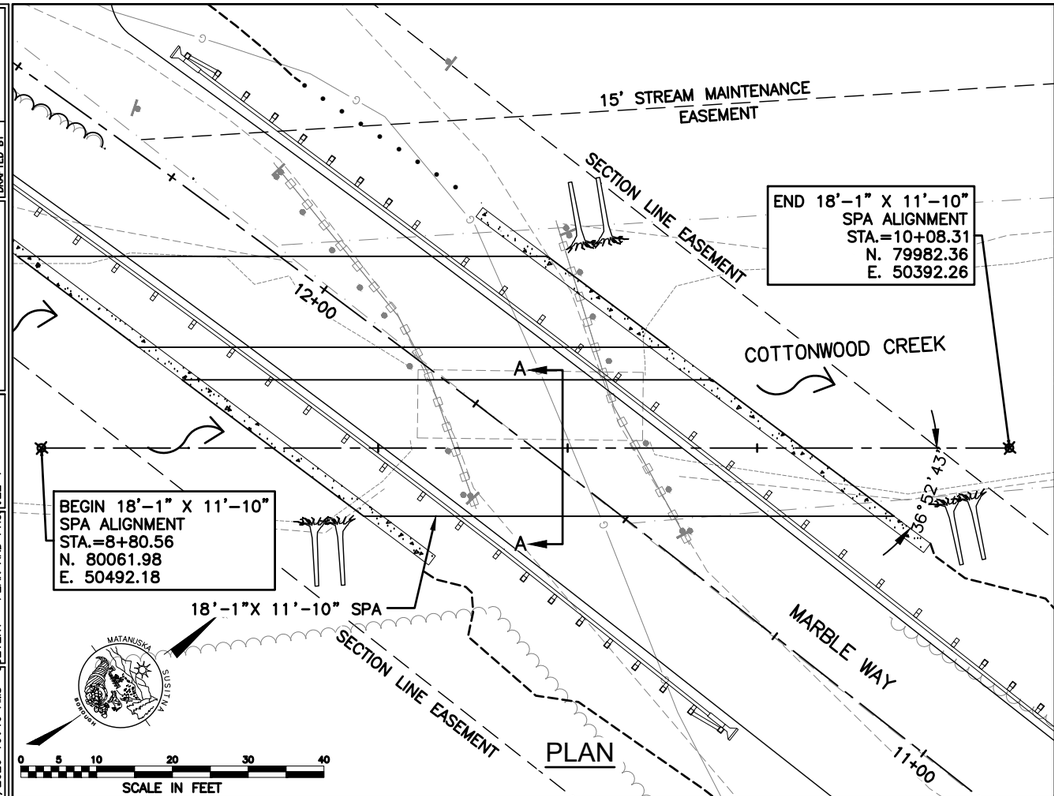

PLAN

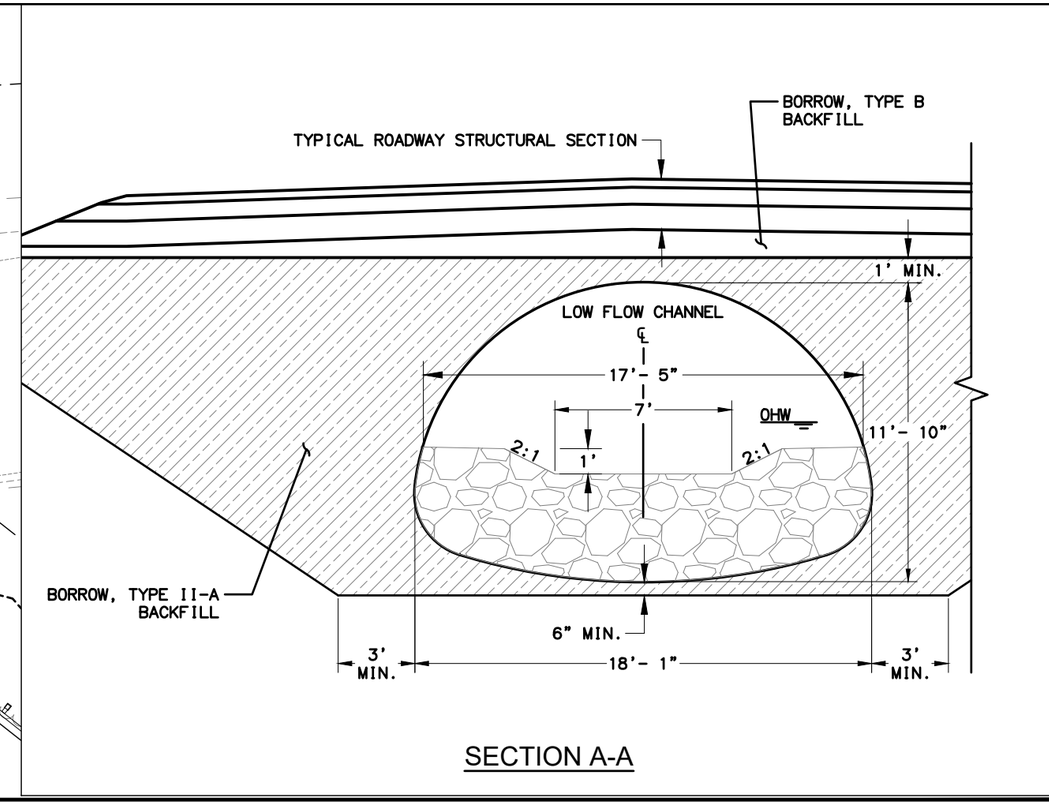

SECTION A-A

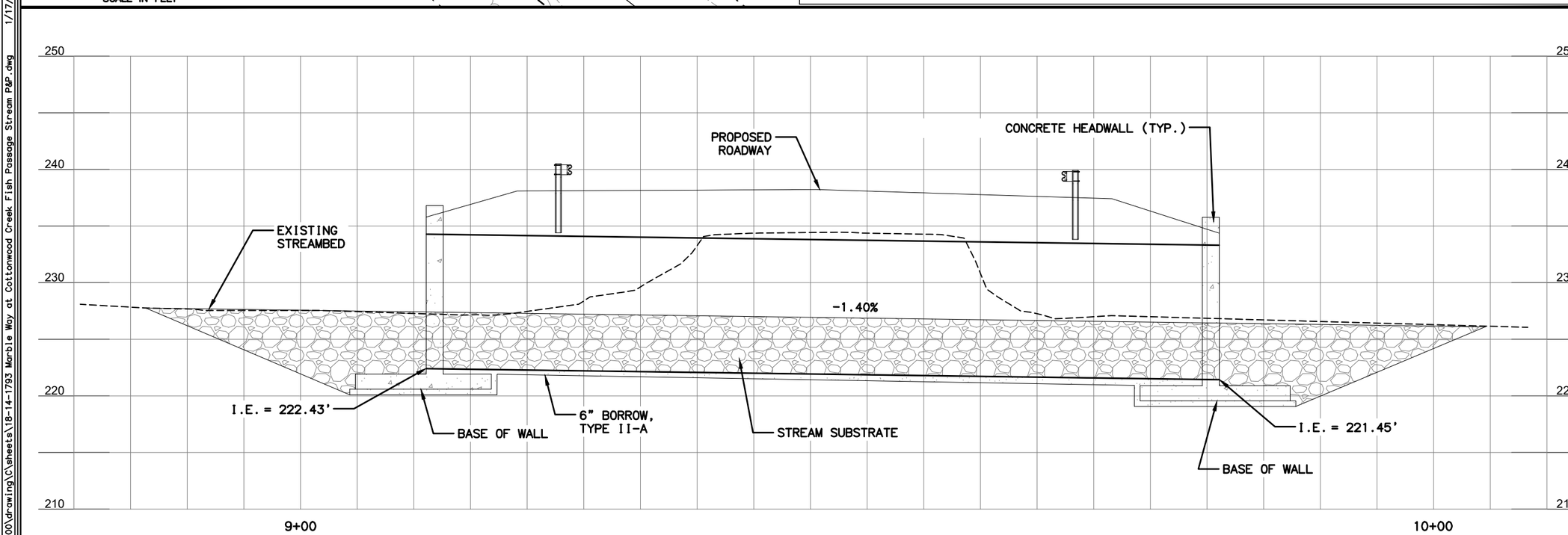

18'-1' x 11'-10" SPA CULVERT PROFILE

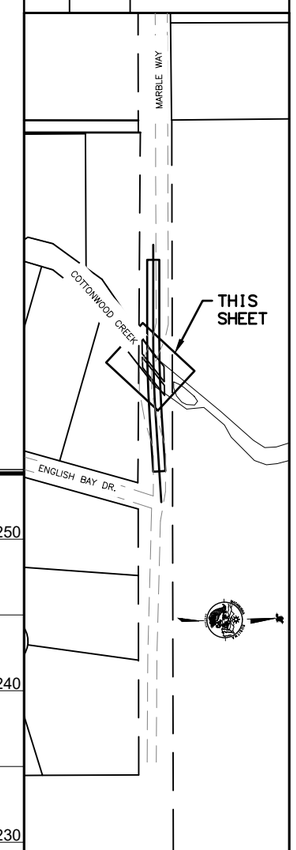

SHEET NO.	TOTAL SHEETS
F2	F3
STATE	DATE
ALASKA	1/17/2020

PROJECT DESIGNATION

18-14-1793

REVISIONS

NO.	DATE	DESCRIPTION

STATE OF ALASKA 49TH STEVEN M KARI No. CE 9203 1/17/2020 REGISTERED PROFESSIONAL ENGINEER

Stantec

PLANS DEVELOPED BY:
STANTEC CONSULTING SERVICES INC.
351 W. Parks Hwy., Suite 200
Wasilla, Alaska 99654
Phone: (907) 376-7815
C.A. #126386

MATANUSKA-SUSITNA BOROUGH
DEPARTMENT OF PUBLIC WORKS
OPERATIONS AND MAINTENANCE DIVISION

MARBLE WAY AT COTTONWOOD CREEK FISH PASSAGE

MARBLE WAY CULVERTS
PLAN & PROFILE

DESIGNED BY
CHECKED BY
DRAFTED BY
XREFS
SCALE
LAYOUT: CULVERT - PLAN AND PROFILE-1
DATE TIME: 1/17/2020 10:40 AM8
DRAWING LOCATION: u:\204706540 0\drawing\C\sheets\18-14-1793 Marble Way at Cottonwood Creek Fish Passage Stream P&P.dwg

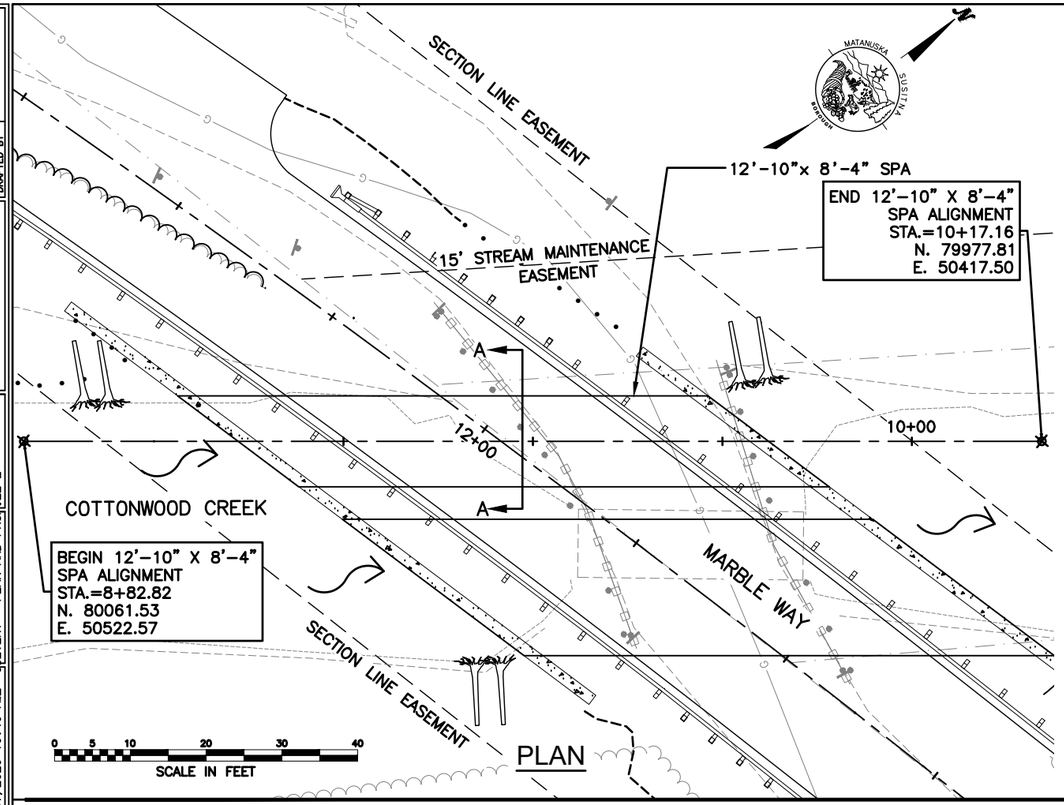

PLAN

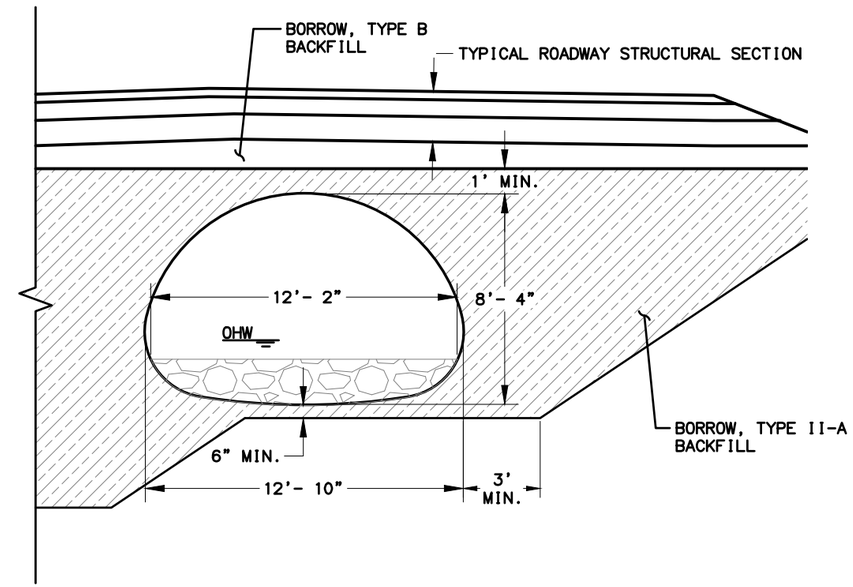

SECTION A-A

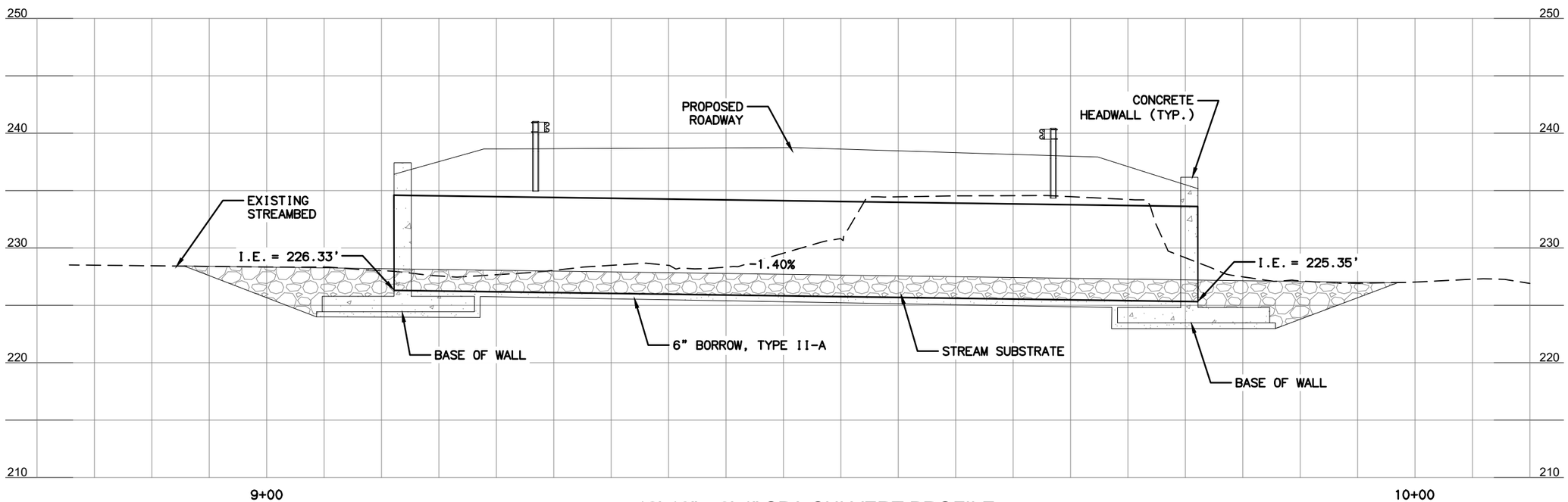

12'-10" x 8'-4" SPA CULVERT PROFILE

SHEET NO.	TOTAL SHEETS
F3	F3
STATE	DATE
ALASKA	1/17/2020

PROJECT DESIGNATION

18-14-1793

REVISIONS

NO.	DATE	DESCRIPTION

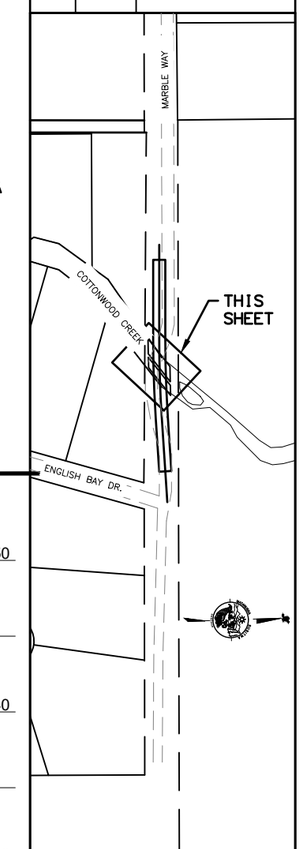

STATE OF ALASKA
49TH
STEVEN M KARI
No. CE 9203
1/17/2020
REGISTERED PROFESSIONAL ENGINEER

Stantec
PLANS DEVELOPED BY:
STANTEC CONSULTING SERVICES INC.
351 W. Parks Hwy., Suite 200
Wasilla, Alaska 99654
Phone: (907) 376-7815
C.A. #126386

MATANUSKA-SUSITNA BOROUGH
DEPARTMENT OF PUBLIC WORKS
OPERATIONS AND MAINTENANCE DIVISION

MARBLE WAY AT COTTONWOOD CREEK FISH PASSAGE

MARBLE WAY CULVERTS
PLAN & PROFILE

DRAWING LOCATION
u:\204706540 0\drawing\C\sheets\18-14-1793 Marble Way at Cottonwood Creek Fish Passage Stream P&P.dwg

DATE TIME 1/17/2020 10:40 AM
LAYOUT 2' CULVERT - PLAN AND PROFILE-2
SCALE
XREFS
DESIGNED BY
CHECKED BY
DRAFTED BY

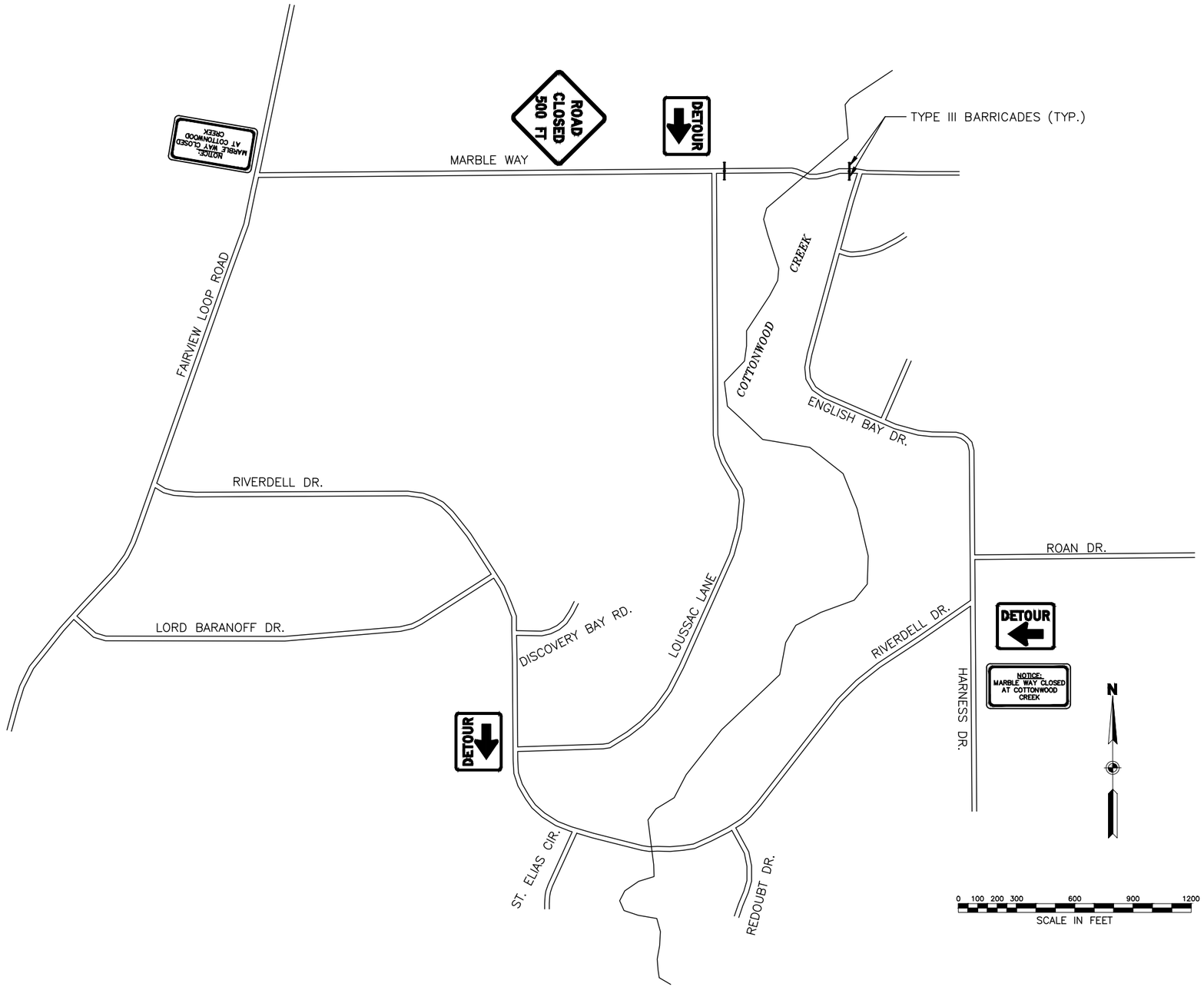

TRAFFIC CONTROL NOTES:

1. CONSTRUCTION SIGNING, FLAGGING, DETOURS AND GENERAL TRAFFIC CONTROL FEATURES SHALL CONFORM TO THE GUIDELINES SET FORTH IN THE "C" SERIES STANDARD DRAWINGS AND THE APPLICABLE PORTIONS OF SECTION 615 AND 643 OF THE SPECIFICATIONS, THE ALASKA TRAFFIC MANUAL AND THE MANUAL OF UNIFORM TRAFFIC CONTROL DEVICES.
2. A MINIMUM OF ONE LANE SHALL BE MAINTAINED AT ALL TIMES THROUGH ALL WORK AREAS.
3. TWO LANES SHALL BE MAINTAINED AT ALL TIMES IN NON-WORK AREAS, AND DURING NON-WORKING HOURS.
4. TEMPORARY DRIVING LANES SHALL HAVE A MINIMUM WIDTH OF 10'-0".
5. DRIVEWAYS MAY BE CLOSED DURING ACTUAL WORK ON A GIVEN DRIVEWAY, PROVIDED THAT THE CLOSURE DOES NOT EXCEED 8 HOURS AND THE AFFECTED RESIDENTS HAVE BEEN GIVEN 24 HOURS ADVANCE NOTICE OF THE CLOSURE.
6. MAXIMUM SPACING BETWEEN CHANNELIZING DEVICES SHALL BE EQUAL TO THE SPEED LIMIT IN FEET.
7. FLOOD LIGHTS SHALL BE PROVIDED FOR FLAGGER STATIONS DURING NIGHT OPERATIONS.
8. A SINGLE FLAGGER MAY BE APPROVED BY THE ENGINEER IF THE ENTIRE WORK AREA IS VISIBLE FROM THE FLAGGER STATION.
9. CONSTRUCTION SIGNING SHALL BE IN PLACE ONLY WHEN THE CONDITIONS EXIST FOR WHICH THE SIGNS ARE INTENDED.
10. TYPE "C" STEADY BURN WARNING LIGHTS SHALL BE USED TO MARK CHANNELIZING DEVICES AT NIGHT.
11. CHANNELIZING DEVICES ARE TO BE EXTENDED TO A POINT WHERE THEY ARE VISIBLE TO APPROACHING TRAFFIC.
12. TRAFFIC MAINTENANCE WILL INCLUDE ADVANCED WARNING SIGNS ON FAIRVIEW LOOP RD., AND LANE CLOSURE AND ROADWAY ENCROACHMENT WARNING SIGNS AND CHANNELIZING DEVICES AS REQUIRED FOR THE WORK BEING PERFORMED.

STATE OF ALASKA 49TH STEVEN M KARI No. CE 9203 1/17/2020 REGISTERED PROFESSIONAL ENGINEER

BY	DATE	REVISION

Stantec
PLANS DEVELOPED BY:
STANTEC CONSULTING SERVICES INC.
351 W. Parks Hwy., Suite 200
Wasilla, Alaska 99654
Phone: (907) 376-7815
C.A. #126386

MARBLE WY AT COTTONWOOD CR. FISH PASSAGE
MATANUSKA-SUSITNA BOROUGH
PERMANENT TRAFFIC CONTROL

DATE: 1/17/2020
SHEET: J1 OF J1
PROJECT NUMBER: 18-14-1793

Date Revised: 1/17/2020, 10:54 AM
Layout Name: Traffic Control
File Path and Name: U:\204706540\drawing\C\sheets\18-14-1793 Marble Way at Cottonwood Creek Fish Passage Traffic Control.dwg
Designed By:
Drawn By:
Checked By:

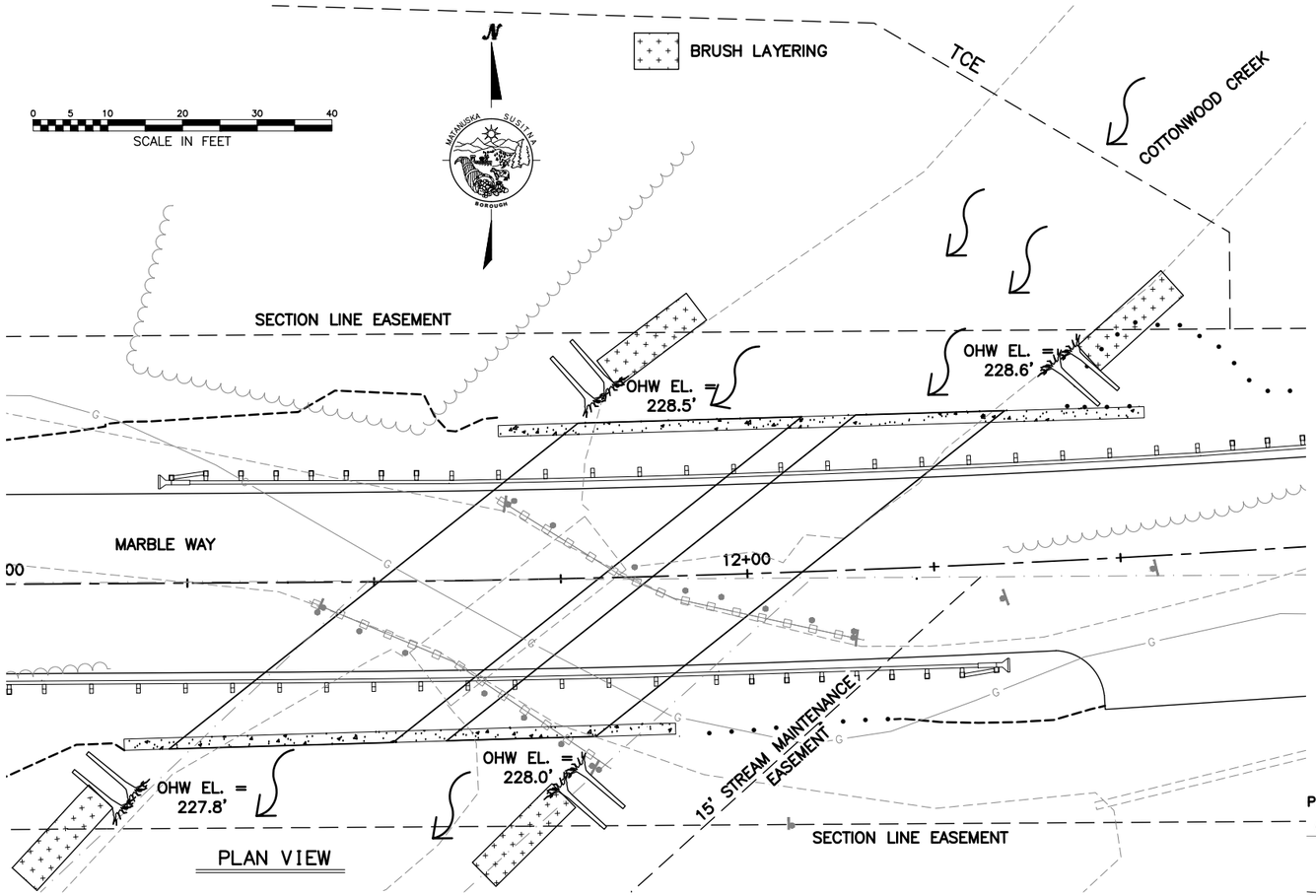

PLAN VIEW

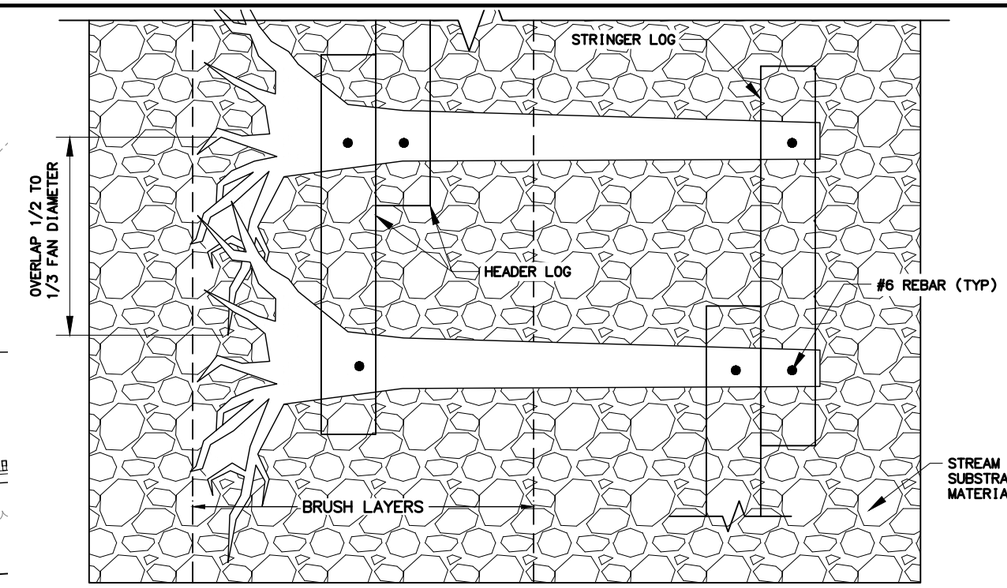

ROOTWAD LAYERING PLAN

NOT TO SCALE

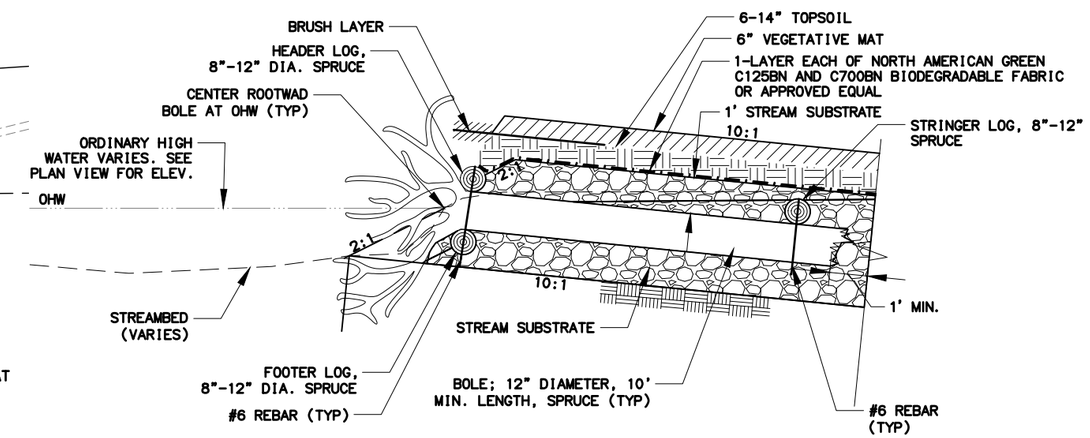

ROOTWAD LAYERING - SECTION VIEW

NOT TO SCALE

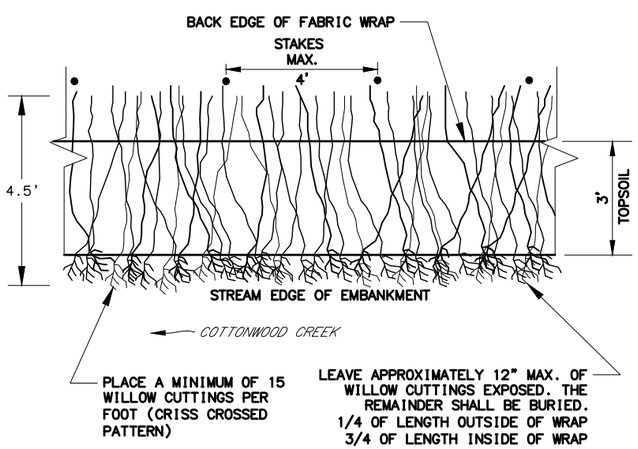

BRUSH LAYERING PLAN

NOT TO SCALE

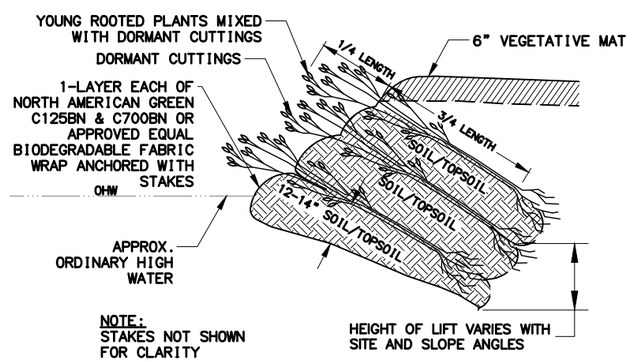

BRUSH LAYERING - SECTION VIEW

NOT TO SCALE

ROOTWAD LAYERING NOTES:

1. WRAP THE FIRST 3' OF TOPSOIL LIFT IN 2 LAYERS OF BIODEGRADABLE FABRIC.
2. ADDITIONAL BRUSH LAYERS AND TOP SOIL MAY BE USED IN ORDER TO MATCH EXISTING BANK HEIGHT, AS DIRECTED BY THE ENGINEER.

BRUSH LAYERING NOTES:

1. FIRST LAYER OF CUTTINGS (NEAREST TO WATER) MUST BE 100% FELTLEAF WILLOW.
2. DO NOT DAMAGE BUDS, STRIP BARK, OR SPLIT THE CUTTINGS DURING THE INSTALLATION. DAMAGED CUTTINGS SHALL BE REPLACED IMMEDIATELY. CUT ENDS BEFORE PLANTING.
3. TO REMOVE AIR POCKETS, WATER THE SOIL CUTTINGS WHEN PLANTING. TAMP SOIL AROUND CUTTING TO ASSURE COMPLETE CONTACT BETWEEN CUTTINGS AND TOPSOIL.
4. AS NECESSARY, TAPER THE ENDS OF THE BIOBANK TO MATCH EXISTING STREAM BANKS.
5. DO NOT APPLY FERTILIZER TO WILLOWS. FERTILIZER SHALL BE HAD SPREAD TO ENSURE OVERSPRAY DOES NOT IMPACT WILLOWS.
6. SEE SECTION 690 OF THE SPECIAL PROVISIONS FOR CONSTRUCTION REQUIREMENTS.
7. FABRIC WRAP SHALL BE FOLDED UNDER 3' MINIMUM.
8. STAKES SHALL BE A MINIMUM OF 1.5"X1.5"X 30".

STATE OF ALASKA
49TH
STEVEN M KARI
No. CE 9203
1/17/2020
REGISTERED PROFESSIONAL ENGINEER

BY	DATE	REVISION

Stantec

PLANS DEVELOPED BY:
STANTEC CONSULTING SERVICES INC.
351 W. Parks Hwy., Suite 200
Wasilla, Alaska 99654
Phone: (907) 376-7815
C.A. #126386

MARBLE WY AT COTTONWOOD CR. FISH PASSAGE
MATANUSKA-SUSITNA BOROUGH
LANDSCAPING AND RESTORATION

DATE: 1/17/2020
SHEET: L1 OF L1
PROJECT NUMBER: 18-14-1793

Designed By:
Drawn By:
Checked By:
Date Revised: 1/17/2020, 10:54 AM
Layout Name: Landscaping and Restoration
File Path and Name: U:\204706540\drawing\C\sheets\18-14-1793 Marble Way at Cottonwood Creek Fish Passage Landscaping and Restoration.dwg

ESCP NOTES:

1. THE CONTRACTOR SHALL DEVELOP A STORM WATER POLLUTION PREVENTION PLAN (SWPPP) FOR THIS PROJECT. THE PLAN SHALL COMPLY WITH THE ALASKA POLLUTANT DISCHARGE ELIMINATION SYSTEM (APDES) REQUIREMENTS FOR STORM WATER DISCHARGE FROM CONSTRUCTION SITES. SEE SECTION 641 OF THE SPECIAL PROVISIONS. THE ALASKA SWPPP GUIDE (AS CURRENTLY AMENDED), AND ALL CONDITIONS OF PERMIT APPROVALS.
2. MINIMIZE THE AREA AND TIME PERIOD ERODIBLE SOILS ARE EXPOSED TO STORM WATER. PHASE CLEARING OPERATIONS TO TAKE ADVANTAGE OF THE EXISTING COVER ONSITE BEFORE CONSTRUCTION TO PROVIDE TEMPORARY COVER FOR DISTURBED AREAS NOT CURRENTLY BEING WORKED. DISTURBED AREAS SHALL BE STABILIZED AS SOON AS PRACTICABLE.
3. SEDIMENT CONTROL DEVICES SHALL BE INSTALLED BEFORE ERODIBLE SOILS ARE EXPOSED AND MAY HAVE TO BE REMOVED AND REINSTALLED DAILY TO ALLOW CONSTRUCTION ACTIVITIES TO PROCEED. ALL DEVICES SHALL BE MAINTAINED ON A DAILY BASIS INCLUDING, BUT NOT LIMITED TO, REMOVAL AND DISPOSAL OF ACCUMULATED SOILS, CLEANING DEVICES AND REPLACEMENT OF DAMAGED DEVICES WITH NEW DEVICES.
4. THE CONTRACTOR SHALL MAINTAIN DEVICES AND CORRECT ANY PROBLEMS OCCURRING DUE TO INADEQUATE PROTECTION MEASURES. INSPECT AND REPAIR DEVICES AFTER EACH RAINFALL. REMOVE AND DISPOSE OF SEDIMENT CONTROL DEVICES AFTER STABILIZATION OF SLOPES. SEE THE ALASKA DOT&PF BMP GUIDE FOR EROSION AND SEDIMENT CONTROL, BMP 18.00 AND BMP 20.00.
5. WATER, OR NON–TOXIC DUST PALLIATIVES SHALL BE USED TO CONTROL DUST.
6. PROVIDE EROSION CONTROL MATTING OR OTHER BMP ON ALL SLOPES WHERE IMMEDIATE SEEDING IS NOT PRACTICAL.
7. STREET CLEANING SHALL OCCUR DAILY OR MORE FREQUENTLY TO CONTROL OFF SITE TRACKING. STREET CLEANING SHALL CONSIST OF DRY SWEEPING OR HIGH EFFICIENCY VACUUM SWEEPING FOLLOWED BY WASHING. DO NOT WASH SEDIMENTS FROM ROADWAY INTO DRAINAGE SYSTEM OR WATER BODIES.
8. FOR THE PURPOSE OF THE SWPPP PREPARATION, THE ESTIMATED AREA OF DISTURBANCE IS 0.6 ACRES. THIS INCLUDES THE EXISTING ROADWAY.

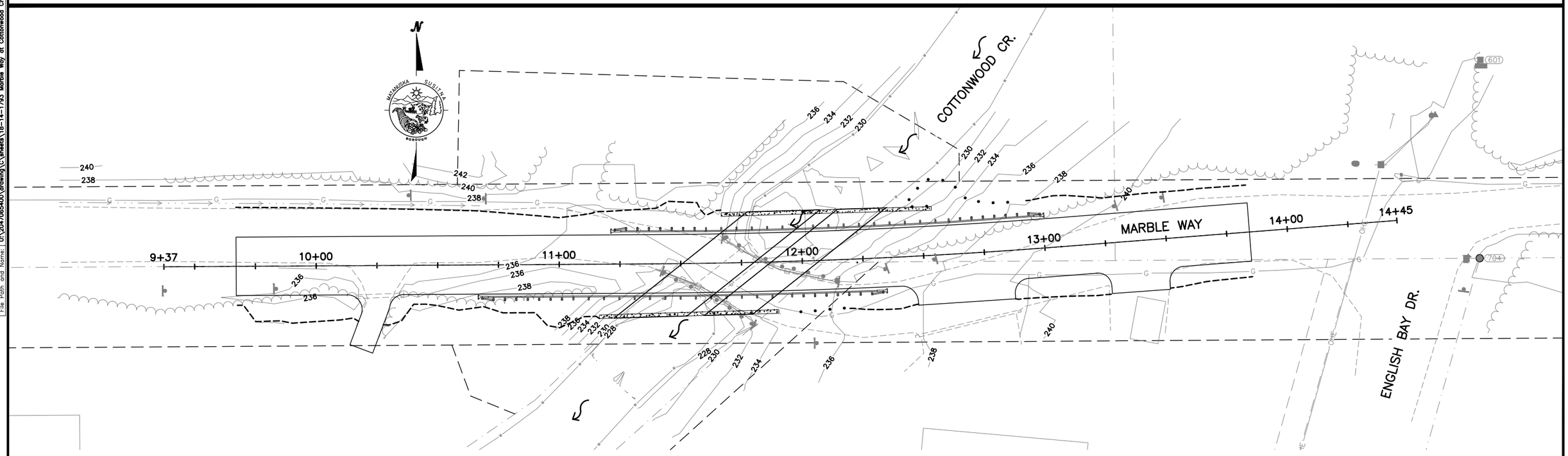

0 10 20 40 60 80
SCALE IN FEET

ESCP LEGEND:	
	DRAINAGE PATTERN

NOTE:
THE INTENT OF THESE PLANS IS TO SHOW EXISTING DRAINAGE PATTERNS AND PRELIMINARY SEDIMENT CONTROL FEATURES.

BY	DATE	REVISION

Stantec
PLANS DEVELOPED BY:
STANTEC CONSULTING SERVICES INC.
351 W. Parks Hwy., Suite 200
Wasilla, Alaska 99654
Phone: (907) 376-7815
C.A. #126386

MARBLE WY AT COTTONWOOD CR. FISH PASSAGE
MATANUSKA–SUSITNA BOROUGH

DRAFT ESCP

DATE: 1/17/2020
SHEET: Q1 OF Q1
PROJECT NUMBER: 18–14–1793

Designed By:
Drawn By:
Checked By:

Date Revised: 1/17/2020, 10:54 AM
Layout Name: DRAFT ESCP
File Path and Name: U:\204706540\drawing\C\sheets\18-14-1793 Marble Way at Cottonwood Creek Fish Passage ESCP Plan.dwg

MATANUSKA-SUSITNA BOROUGH
DEPARTMENT OF PUBLIC WORKS

OPERATIONS & MAINTENANCE DIVISION

PROJECT NO. 18-14-1793
MARBLE WAY AT COTTONWOOD CREEK FISH PASSAGE
100% CROSS SECTIONS

Designed By:	-
Drawn By:	JHB
Checked By:	JMG
Date Revised:	1/17/2020, 1:14 PM
Layout Name:	CoverSheet
File Path and Name:	U:\204706540\drawing\C\source\corridors-sections\Marble Way 2to1 Cross Sections Cover Sheet.dwg

BY	DATE	REVISION

Stantec

PLANS DEVELOPED BY:
STANTEC CONSULTING SERVICES INC.
351 W. Parks Hwy., Suite 200
Wasilla, Alaska 99654
Phone: (907) 376-7815
C.A. #126386

MARBLE WAY AT COTTONWOOD CR. FISH PASSAGE
MATANUSKA-SUSITNA BOROUGH

DATE: 1/17/2020

AS-BUILT SHEET:

9+78.49

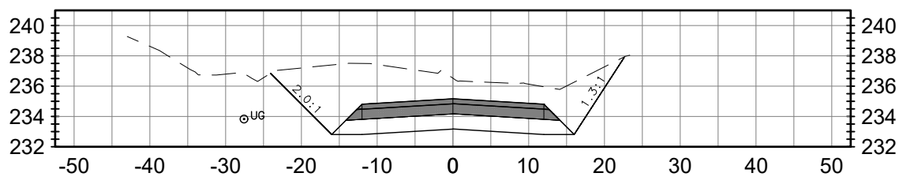

10+00

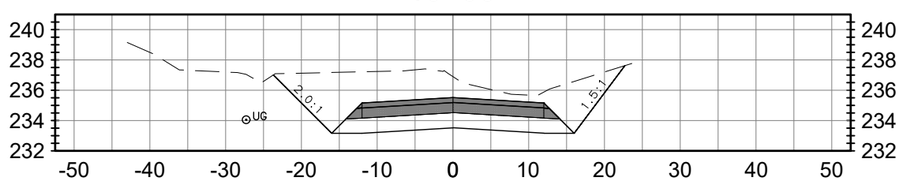

10+25

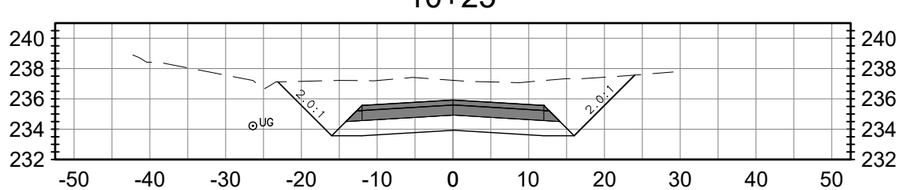

10+50

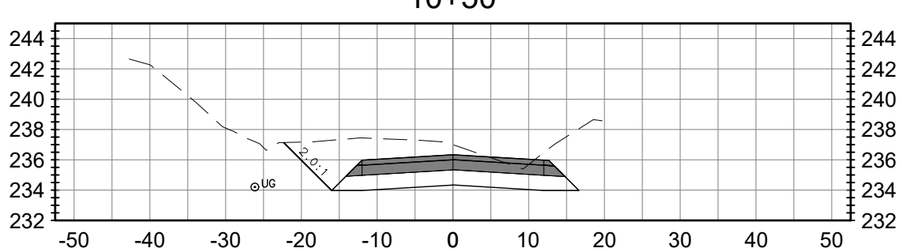

10+75

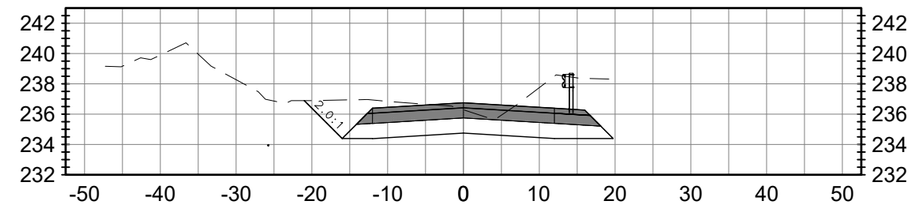

11+00

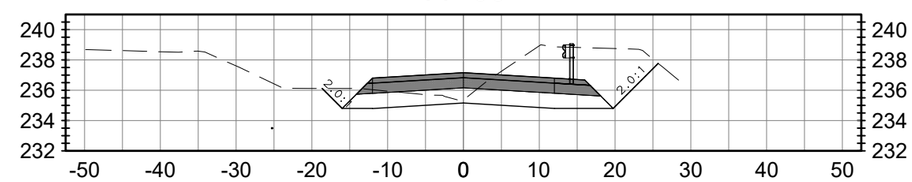

11+25

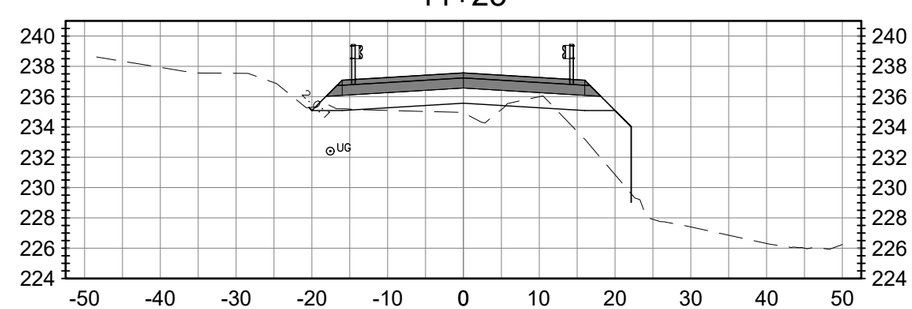

11+50

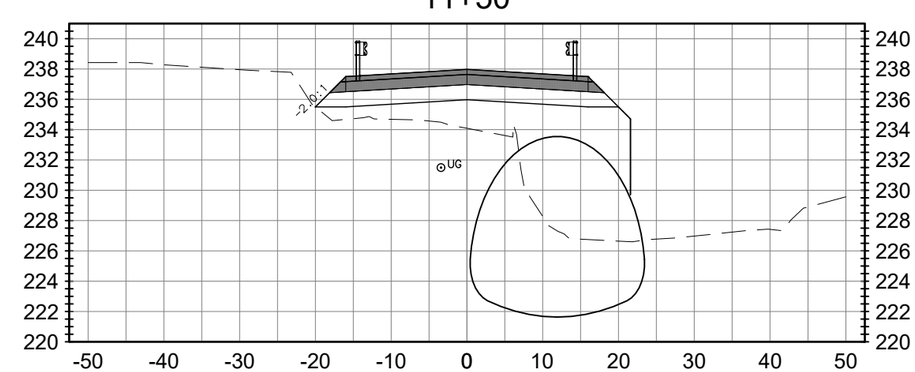

SHEET NO.	TOTAL SHEETS
STATE	YEAR
ALASKA	2020

PROJECT DESIGNATION

ADDENDUM NO.

ATTACHMENT NO.

REVISIONS

NO.	DATE	DESCRIPTION

UG — UNDERGROUND GAS LINE, DEPTH UNKNOWN

UT — UNDERGROUND TELEPHONE LINE, DEPTH UNKNOWN

OE — OVERHEAD ELECTRICAL

ROW — EXISTING RIGHT OF WAY

Stantec

PLANS DEVELOPED BY:
STANTEC CONSULTING SERVICES INC.
351 W. Parks Hwy., Suite 200
Wasilla, Alaska 99654
Phone: (907) 376-7815
C.A. #126386

MAT-SU BOROUGH

MARBLE WAY

Plotted by: mhidalgo Plotted: Jan 17, 2020 , 1:08pm
CTB: PLOT SCALE: 25 DESIGNED BY CHECKED BY Jan 17, 2020
XREFS: U:\204706400\drawing\C\source\corridor\Sections\Marble Way 2to1 Cross Sections.dwg
SCALE 1= COMPUTER DESIGNATION

11+75

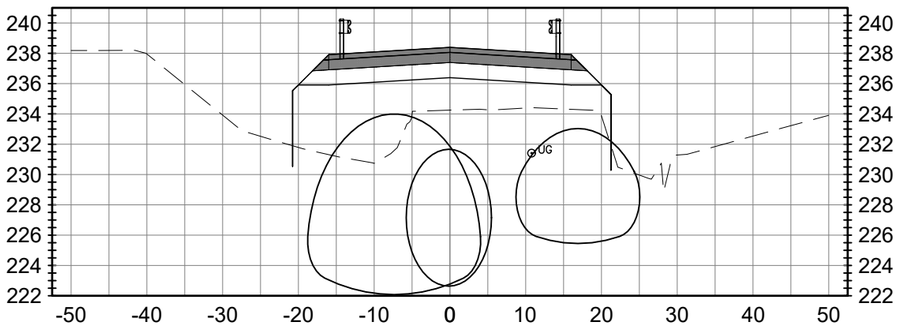

12+00

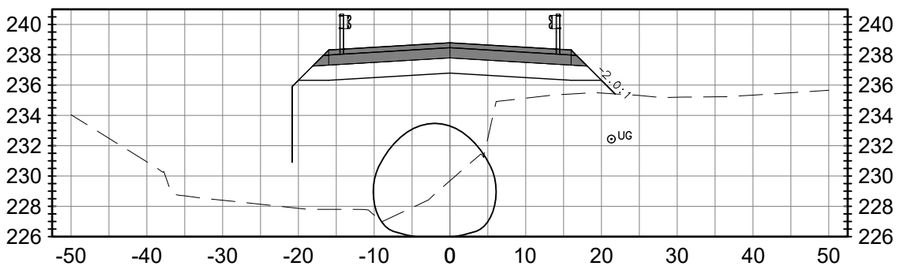

12+25

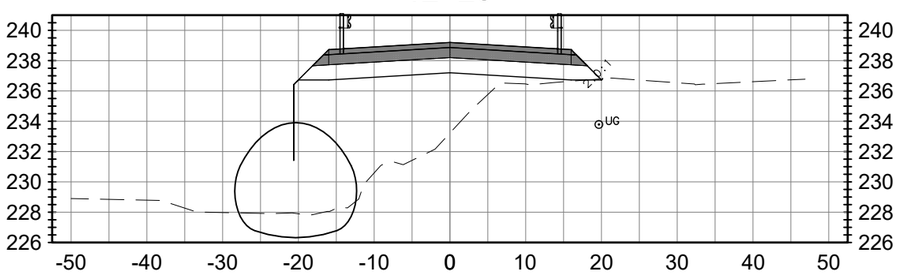

12+50

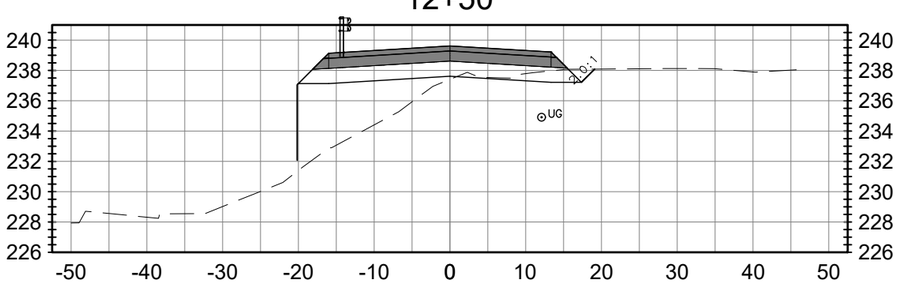

12+75

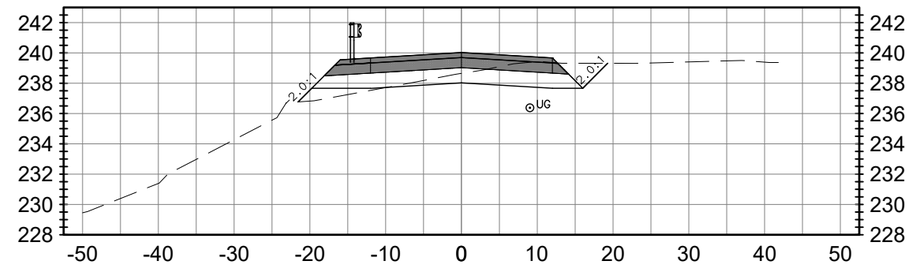

13+00

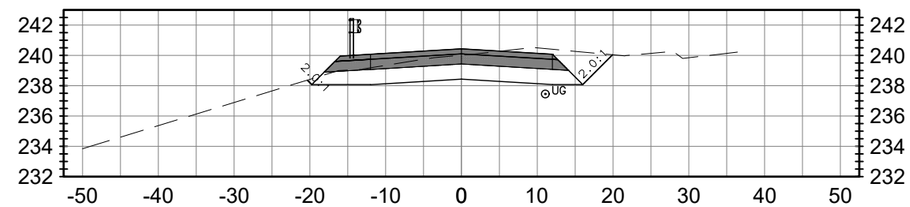

13+25

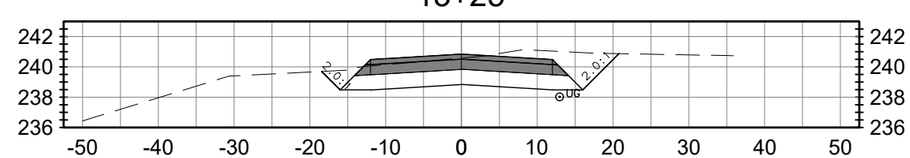

13+50

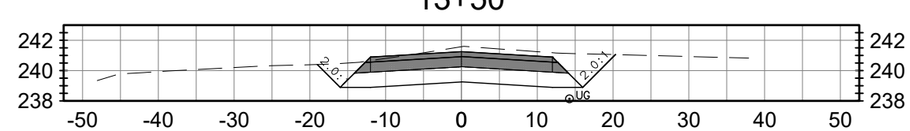

SHEET NO.	TOTAL SHEETS
STATE	YEAR
ALASKA	2020

PROJECT DESIGNATION

ADDENDUM NO.

ATTACHMENT NO.

REVISIONS

NO.	DATE	DESCRIPTION

UG — UNDERGROUND GAS LINE, DEPTH UNKNOWN

UT — UNDERGROUND TELEPHONE LINE, DEPTH UNKNOWN

OE — OVERHEAD ELECTRICAL

ROW — EXISTING RIGHT OF WAY

Stantec

PLANS DEVELOPED BY:
STANTEC CONSULTING SERVICES INC.
351 W. Parks Hwy., Suite 200
Wasilla, Alaska 99654
Phone: (907) 376-7815
C.A. #126386

MAT-SU BOROUGH

MARBLE WAY

Plotted by: mhidalgo Plotted: Jan 17, 2020 , 1:08pm

CTB: PLOT SCALE: 25 DESIGNED BY
CHECKED BY
DRAWN BY
Jan 17, 2020

XREFS: U:\204706400\drawing\C\source\corridor\Sections\Marble Way 2to1 Cross Sections.dwg

SCALE 1= COMPUTER DESIGNATION

13+75

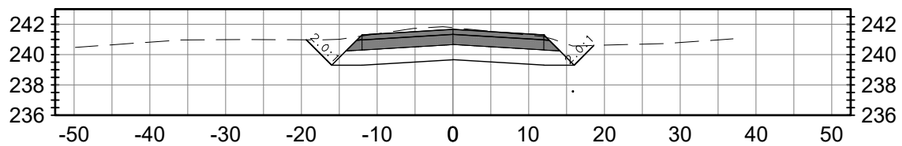

13+95.78

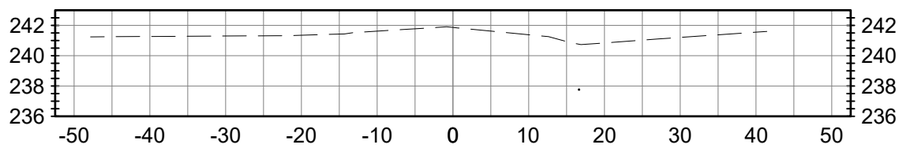

Plotted by: mhidalgo Plotted: Jan 17, 2020 , 1:08pm

SCALE 1=	XREFS:	DESIGNED BY	Jan 17, 2020
COMPUTER DESIGNATION	CTB:	CHECKED BY	
U:\204706540\drawing\C\source\corridor\Sections\Marble Way 2to1 Cross	PLOT SCALE: 25	DRAWN BY	

SHEET NO.	TOTAL SHEETS
STATE	YEAR
ALASKA	2020

PROJECT DESIGNATION

ADDENDUM NO.

ATTACHMENT NO.

REVISIONS

NO.	DATE	DESCRIPTION

UG UNDERGROUND GAS LINE, DEPTH UNKNOWN

UT UNDERGROUND TELEPHONE LINE, DEPTH UNKNOWN

OE OVERHEAD ELECTRICAL

ROW EXISTING RIGHT OF WAY

Stantec

PLANS DEVELOPED BY:
STANTEC CONSULTING SERVICES INC.
351 W. Parks Hwy., Suite 200
Wasilla, Alaska 99654
Phone: (907) 376-7815
C.A. #126386

MAT-SU BOROUGH

MARBLE WAY

MATANUSKA-SUSITNA BOROUGH
DEPARTMENT OF PUBLIC WORKS

OPERATIONS & MAINTENANCE DIVISION

MARBLE WAY AT COTTONWOOD CREEK FISH PASSAGE

18-14-1793

100% DRIVEWAY PROFILES

Date Revised:	1/17/2020, 1:15 PM
Layout Name:	CoverSheet
File Path and Name:	U:\204705540\drawing\C\source\alignments\Marble Way Driveway Profiles Cover Sheet.dwg
Designed By:	-
Drawn By:	JHB
Checked By:	JMG

BY	DATE	REVISION

Stantec
PLANS DEVELOPED BY:
STANTEC CONSULTING SERVICES INC.
351 W. Parks Hwy., Suite 200
Wasilla, Alaska 99654
Phone: (907) 376-7815
C.A. #126386

MARBLE WAY AT COTTONWOOD CR. FISH PASSAGE
MATANUSKA-SUSITNA BOROUGH

DATE: 1/17/2020

AS-BUILT SHEET:

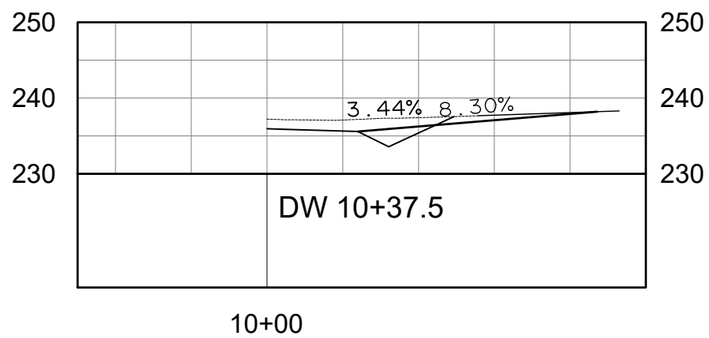

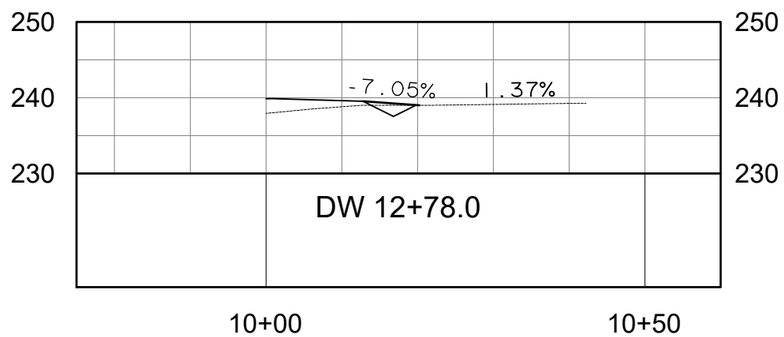

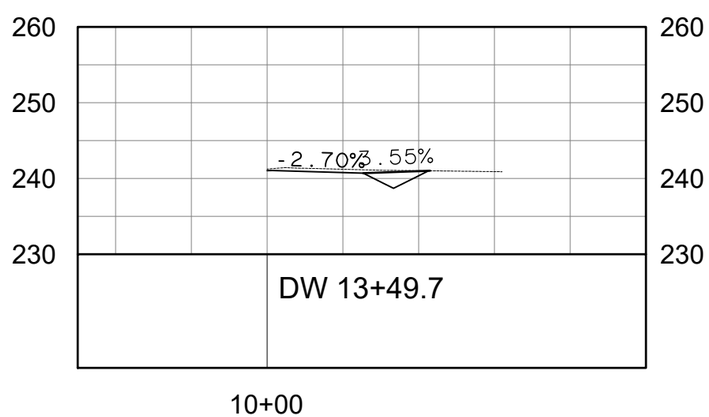

SHEET NO.	TOTAL SHEETS
STATE	YEAR
ALASKA	2020

PROJECT DESIGNATION

ADDENDUM NO.

ATTACHMENT NO.

REVISIONS

NO.	DATE	DESCRIPTION

Stantec
351 W. Parks Hwy., Suite 200
Wasilla, Alaska 99654 Phone: (907) 352-7803
FAX: (907) 376-7819

MAT-SU BOROUGH

MARBLE WAY DRIVEWAYS

Plotted by: mhidalgo Plotted: Jan 17, 2020 , 1:09pm

CTB:		DESIGNED BY
PLOT SCALE:	0.25	CHECKED BY
XREF'S:	Marble Way driveway alignments and profiles	REVIEWED BY
SCALE 1=		DATE Jan 17, 2020
COMPUTER DESIGNATION	U:\204706540O\drawing\C\source\alignments\WEBC	

THE STATE of ALASKA
GOVERNOR MICHAEL J. DUNLEAVY

Department of Fish and Game

DIVISION OF HABITAT
Matanuska-Susitna Area Office

1800 Glenn Highway, Suite 6
Palmer, Alaska 99645-6736
Main: 907.861.3200
Fax: 907.861.3232

FISH HABITAT PERMIT FH18-IV-0363

ISSUED: January 15, 2019
EXPIRES: Life of Project

Alex Senta
Matanuska-Susitna Borough
1420 S. Industrial Way
Palmer, AK 99645

RE: Culvert Replacement (Culvert No. 20401302)
Cottonwood Creek (Waterbody No. 247-50-10300)
Sections 19 & 30, T 17 N, R 1 W, SM
Location: 61.5418N, -149.5236W

Dear Mr. Senta:

Pursuant to the anadromous fish act at AS 16.05.871 (b), the Alaska Department of Fish and Game (ADF&G) Division of Habitat has reviewed your proposal to replace a culvert on Cottonwood Creek at Marble Way.

Project Description

According to your project plans, you will replace a 30-foot long by 9-foot wide corrugated metal pipe culvert (CMP) with an 18-foot, 1-inch wide by 11-foot, 10-inch tall by 70-foot long structural plate pipe arch and a 12-foot, 10-inch wide by 8-foot, 4-inch tall by 70-foot long structural plate pipe arch for overflow. A low flow channel will be constructed in the main pipe with riprap, cobbles, gravel, and sand within the pipes with 2:1 slopes. The secondary arch pipe's invert will be offset approximately 3-feet 6 inches from the main pipe to ensure flow for flood events only. The overflow pipe will be filled with 1-foot, 9 inches of streambed material as well. To ensure stability, a Type 1 headwall will be constructed at the inlet and outlet of the pipe and aproned with 25 cubic yards (cy) of type II-A backfill upstream and 26 cy downstream below the ordinary high water mark.

Cottonwood Creek will be routed through a temporary stream diversion consisting of a polyethylene plastic lined excavated inlet channel, a 6-foot wide by 52-foot long corrugated metal pipe, and polyethylene plastic lined excavated outlet channel (see attached guidelines). Efficient upstream and downstream fish passage will be maintained at all times. The construction site will be isolated with supersacks or similar type. Before the flow is returned, the construction site will be slowly saturated to settle the fines to prevent a sediment plume from traveling downstream.

At this time, you intend to rehabilitate about 15 feet of bank upstream and downstream of the installed culverts. This will consist of grading the bank to a 2:1 slope, and placement of 10 feet of cabled spruce trees and 15 feet of brush layering. Installation methods will conform to the techniques described in the ADF&G manual Streambank Revegetation and Protection, A Guide for Alaska. Your permit application and all materials, maps, and drawings are hereby adopted by reference into this permit.

Anadromous Fish Act

Cottonwood Creek (Waterbody No. 247-50-10300) has been specified as being important for the spawning, rearing, or migration of anadromous fishes pursuant to AS 16.05.871(a). The water body provides habitat for Chinook, coho, and sockeye salmon.

In accordance with AS 16.05.871(d), your project is approved subject to the project description and permit terms, and the following stipulations:

1. The applicant is responsible to maintain free fish passage for the life of the project including all construction phases.
2. The installation of the diversion shall be conducted between May 1 and July 15.
3. Silt fencing or other suitable containment techniques must be used, as necessary, to minimize the introduction of suspended solids into flowing waters.

Advisory: You have not requested to withdraw water from any fish bearing waterbodies in association with this project; however, if this becomes necessary it must first be authorized by the Division of Habitat. Please contact the Division of Habitat (907-861-3200) For more information.

Advisory: This project is scheduled to be completed by October 1, 2021. Construction activities after this date may require an amendment. Please contact the Division of Habitat (907-861-3200) For more information.

Advisory: Your activities may require a fish resource permit from the Division of Sport Fish. Please contact the Aquatic Resource Permit Coordinator at dgf.dsf.permitcoordinator@alaska.gov for more information.

You must maintain the integrity of the structure in accordance with the terms of this permit so that free fish passage is assured. You must restore any obstruction to the free fish passage to the satisfaction of ADF&G.

Permit Terms

This letter constitutes a permit issued under the authority of AS 16.05.871 and must be retained on site during project activities. Please be advised that this determination applies only to Division of Habitat regulated activities; other agencies also may have jurisdiction under their respective authorities. This determination does not relieve you of your responsibility to secure other permits; state, federal, or local. You are still required to comply with all other applicable laws.

You are responsible for the actions of contractors, agents, or other persons who perform work to accomplish the approved project. For any activity that significantly deviates from the approved plan, you shall notify the Division of Habitat and obtain written approval in the form of a permit

amendment before beginning the activity. Any action that increases the project's overall scope or that negates, alters, or minimizes the intent or effectiveness of any provision contained in this permit will be deemed a significant deviation from the approved plan. The final determination as to the significance of any deviation and the need for a permit amendment is a Division of Habitat responsibility. Therefore, we recommend you consult the Division of Habitat before considering any deviation from the approved plan.

You shall give an authorized representative of the state free and unobstructed access to the permit site, at safe and reasonable times, for the purpose of inspecting or monitoring compliance with any provision of this permit. You shall furnish whatever assistance and information the authorized representative reasonably requires for monitoring and inspection purposes.

In addition to the penalties provided by law, this permit may be terminated or revoked for failure to comply with its provisions or failure to comply with applicable statutes and regulations. You shall mitigate any adverse effect upon fish or wildlife, their habitats, or any restriction or interference with public use that the commissioner determines was a direct result of your failure to comply with this permit or any applicable law.

You shall indemnify, save harmless, and defend the department, its agents, and its employees from any and all claims, actions, or liabilities for injuries or damages sustained by any person or property arising directly or indirectly from permitted activities or your performance under this permit. However, this provision has no effect if, and only if, the sole proximate cause of the injury is the department's negligence.

You may appeal this permit decision relating to AS 16.05.871 in accordance with the provisions of AS 44.62.330-630.

Please direct questions about this permit to Habitat Biologist Sarah Wilber at 907-861-3206 or sarah.wilber@alaska.gov.

Sincerely,

Doug Vincent-Lang
Acting Commissioner

By: Jonathan Kirsch
Matanuska-Susitna Area Manager
Division of Habitat
(907) 861-3200

-seew

Enclosed: Temporary Stream Diversion Procedures

cc:	A. Ott, Habitat	S. Ivey, SF	T. Long, SF	Pagemaster, COE
	D. Dahl, AWT	T. Taranto, MSB	G. O'Doherty, SF	Permits, SF
	L. Schick, DNR	R. Benkert, Habitat	R. Cooper, Stantec	

MATANUSKA-SUSITNA BOROUGH

350 East Dahlia Avenue, Palmer, Alaska 99645-6488
Planning and Land Use Department
Development Services Division (907) 861-7822
FAX (907) 861-8158 - E-Mail PermitCenter@matsugov.us

FLOOD HAZARD DEVELOPMENT PERMIT

PERMIT NUMBER: **FHDP # 172920180072**

LEGAL DESCRIPTION: TRS:17N01W19_30, Seward Meridian; Marble way and Cottonwood Creek, Wasilla

ISSUED TO:
MSB/ PW
POC: Alex Senta
350 E Dahlia Ave
Palmer, AK 99645

In accordance with MSB 17.29.110: an application has been reviewed and is approved for development described as culvert replacement on Cottonwood Creek at Marble Way. The purpose of the project is to enhance fish passage, improve flood carrying capacity, and roadway features that the crossing of Marble Way and Cottonwood Creek. The intent of the design is to convey the 1 percent chance flood level and to maximize fish passage by simulating the natural stream up, within and downstream of the road crossing. The design also includes streambank revegetation protection and restoration methods to enhance the fish habitat and quality of life.

Only development specifically described in the submitted application is authorized under the requirements of MSB 17.29. A new application must be submitted and approved prior to any other development.

This permit pertains only to compliance with the requirements of MSB 17.29 (Flood Damage Prevention). This permit does not relieve the permittee from the responsibility to comply with all other local, state, and federal laws.

IMPORTANT NOTES
Development authorized must commence no later than 180 days from the issuance of this permit.

RIGHT TO APPEAL
This order may be appealed, in accordance with MSB 15.39, within 21 days from the date on which written decision or order is issued.

You must contact this office after the work has been completed so an on-site inspection can be conducted and a Certificate of Completion can be issued.

ISSUED BY:

Taunnie Boothby, CFM
Planner II

January 25, 2019
Issuance Date

DEPARTMENT OF THE ARMY
ALASKA DISTRICT, U.S. ARMY CORPS OF ENGINEERS
REGULATORY DIVISION
P.O. BOX 6898
JBER, AK 99506-0898

Regulatory Division January 22, 2019
POA-2018-00467

Mr. Alex Senta
Matanuska Susitna Borough
1420 S Industrial Way
Palmer, AK 99645

Dear Mr. Senta:

This is in response to your November 27, 2018, application for a Department of the Army (DA) permit to discharge 902 cubic yards (cy) of fill material into 0.09-acre below the Ordinary High Water Mark of Cottonwood Creek to install two culverts and restore approximately 30 feet of stream bank to improve fish passage and 100-year flood capacity. It has been assigned file number POA-2018-00467, Cottonwood Creek, which should be referred to in all future correspondence with this office. The project site is located within Section 19, T. 17 N., R. 1 W., Seward Meridian; USGS Quad Map Anchorage C-7; Latitude 61.541591º N., Longitude 149.523297º W.; Matanuska Susitna Borough, at the intersection of Marble Way and Cottonwood Creek in Wasilla, Alaska.

Based on our review of the information you furnished and available to us, we have **preliminarily** determined the above project area contains waters of the United States (U.S.), including wetlands, under the Corps of Engineers (Corps) regulatory jurisdiction. See the attached Preliminary Jurisdictional Determination (PJD) Form. Please sign and return the form to our office. A PJD is not appealable. At any time you have the right to request and obtain an Approved Jurisdictional Determination (JD), which can be appealed. If it is your intent to request an Approved JD, do not begin work until one is obtained.

DA permit authorization is necessary because your project will involve work in and placement of structures and fill material into waters of the U.S. under our regulatory jurisdiction.

Based upon the information and plans you provided, we hereby verify that the project encompasses the installation of an 18-foot, 1-inch wide by 11-foot, 10-inch tall by 70-foot long structural plate pipe arch and a 12-foot, 10-inch wide by 8-foot, 4-inch tall by 70-foot long structural plate pipe arch for overflow. A Type 1 headwall will be

constructed at the inlet and outlet of the pipe and aproned with 25 cy of type II-A backfill upstream and 26 cy downstream below the ordinary high water mark. Cottonwood Creek will be routed through a temporary stream diversion consisting of a polyethylene plastic lined excavated inlet channel, a 6-foot wide by 52-foot long corrugated metal pipe, and a polyethylene plastic-lined excavated outlet channel. Approximately 15 feet of upstream bank and 15 feet of downstream bank from Marble Way will be restored by grading the bank to a 2:1 slope, and by placing 10 feet of cabled spruce trees, brush layering, rootwads, and willow or other dormant cuttings. All work will be performed in accordance with the enclosed project plans [sheets A2, B1, C1- C2, E1-E8 of November 26, 2018, and F1 of December 3, 2018] and is authorized by Nationwide Permit (NWP) No. 27, Aquatic Habitat Restoration, Enhancement, and Establishment Activities. NWP No. 27 and its associated Regional and General Conditions can be accessed at our website at: www.poa.usace.army.mil/Missions/Regulatory/Permits. Regional Conditions C, D, E, F, and G apply to your project. You must comply with all terms and conditions associated with NWP No. 27, as well as with the special conditions listed below:

- The permittee shall ensure that the project minimizes alterations to water circulation patterns to the extent practicable. If it is determined by the Corps that the project negatively impacts the hydrology within the stream, the permittee may be required to take additional measures (i.e. install additional depressed road beds, culvert(s), or a similar water conduit) to properly re-establish the hydrology of the area.

Further, please note General Condition 30 requires that you submit a signed certification to us once any work and required mitigation are completed. Enclosed is the form for you to complete and return to us.

Unless this NWP is modified or revoked, it expires on March 19, 2022. It is incumbent upon you to remain informed of the changes to the NWPs. Nothing in this letter excuses you from compliance with other Federal, State, or local statutes, ordinances, or regulations.

Please contact me via email at Estrella.f.campellone@usace.army.mil, by mail at the address above, by phone at (907) 753-2518, or toll free from within Alaska at (800) 478-2712, if you have questions or to request paper copies of the regional and/or general conditions. For more information about the Regulatory Program, please visit our website at www.poa.usace.army.mil/Missions/Regulatory.

Sincerely,

Estrella Campellone
Project Manager

Enclosures

ENCLOSURE

US Army Corps of Engineers
Alaska District

Permit Number: POA-2018-00467

Name of Permittee: Alex Sentra, Matanuska Susitna Borough

Date of Issuance: January 22, 2019

Upon completion of the activity authorized by this permit and any mitigation required by the permit, sign this certification and return it to Ms. Estrella Campellone at the following address:

U.S. Army Corps of Engineers
Alaska District
Regulatory Division
Post Office Box 6898
JBER, Alaska 99506-0898

Please note that your permitted activity is subject to a compliance inspection by an U.S. Army Corps of Engineers representative. If you fail to comply with this permit you are subject to permit suspension, modification, or revocation.

I hereby certify that the work authorized by the above-referenced permit has been completed in accordance with the terms and conditions of the said permit, and required mitigation was completed in accordance with the permit conditions.

_____ _____
Signature of Permittee Date

MATANUSKA-SUSITNA BOROUGH

DEPARTMENT OF PUBLIC WORKS
OPERATIONS AND MAINTENANCE DIVISION

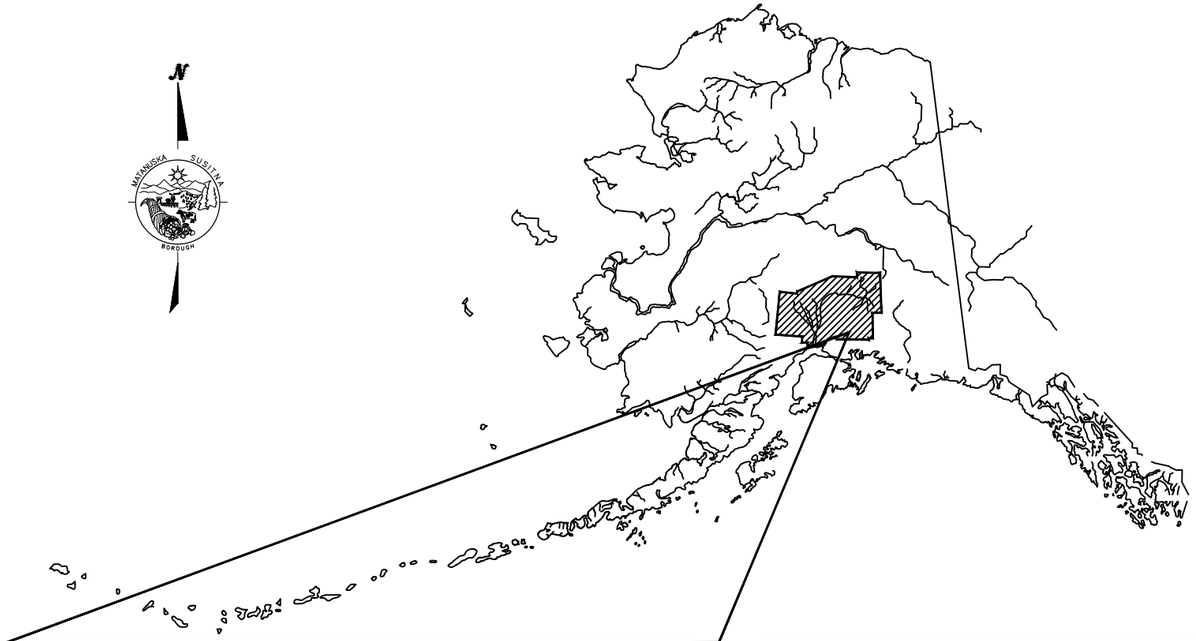

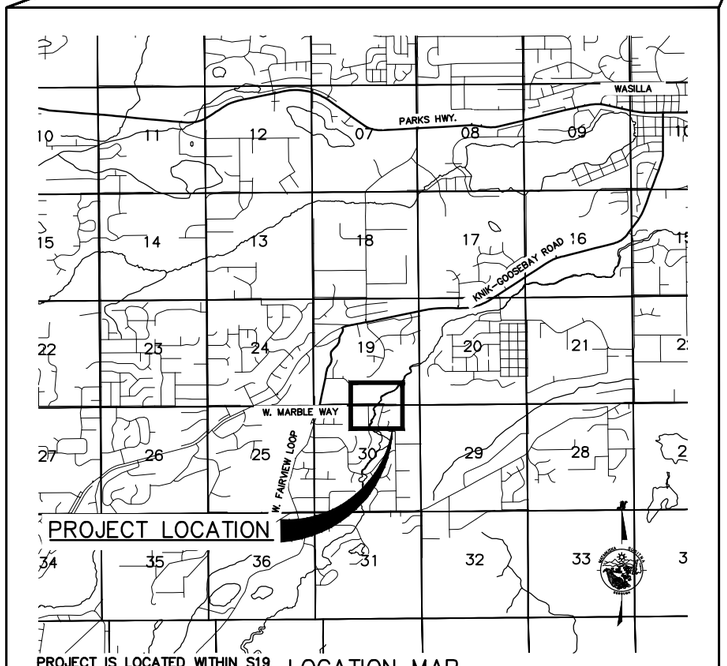

PROJECT IS LOCATED WITHIN S19 & S30, T17N, R1W OF THE S.M.

LOCATION MAP

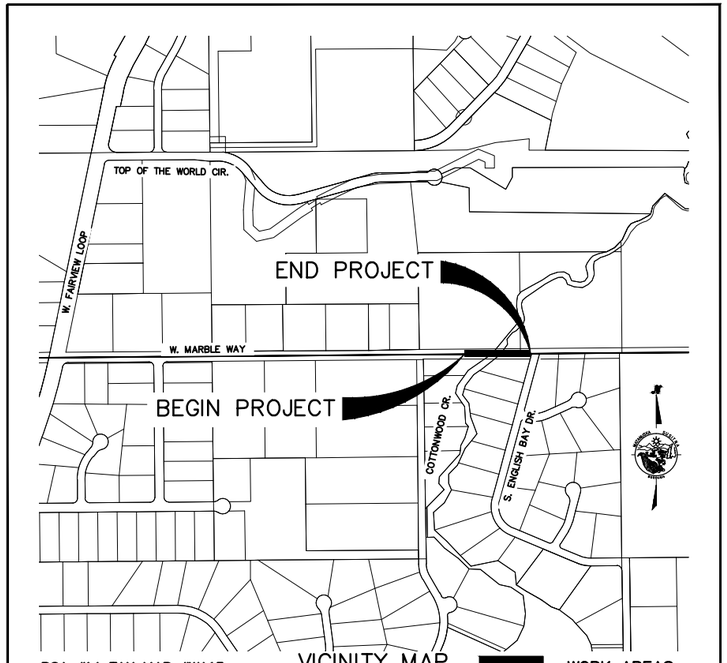

RSA #14 TAX MAP #WA13

VICINITY MAP

WORK AREAS

MARBLE WAY AT COTTONWOOD CREEK FISH PASSAGE

GRADING, DRAINAGE AND SURFACING

PROJECT NUMBER:
18-14-1793

SHEET INDEX

SHEET	TITLE
A1	COVER SHEET
A2	LEGEND, ABBREVIATIONS AND NOTES
A3	SURVEY CONTROL
B1	TYPICAL SECTIONS
C1–C2	ESTIMATE OF QUANTITIES AND SUMMARY TABLES
E1	DEMOLITION PLAN
E2–E3	DIVERSION PLAN
E4–E5	DETAILS
E6–E8	HEADWALL DETAILS
F1–F3	PLAN AND PROFILE SHEETS
G1	APPROACHES AND GRADING
J1–J2	PERMANENT TRAFFIC CONTROL
L1	LANDSCAPING AND RESTORATION
Q1	ESCP

THE FOLLOWING DOT&PF STANDARD DRAWINGS APPLY TO THIS PROJECT:

D–01.02 G–00.04 G–10.10
D–04.21 G–05.00S S–05.01

STATE OF ALASKA 49TH 95% 11/26/18 No. CE 9203 11/26/2018 REGISTERED PROFESSIONAL ENGINEER

Stantec

PLANS DEVELOPED BY:
STANTEC CONSULTING SERVICES INC.
351 W. Parks Hwy., Suite 200
Wasilla, Alaska 99654
Phone: (907) 376-7815
C.A. # 126386

u:\204706540\drawing\Csheets\18-14-1793 Marble Way at Cottonwood Creek Fish Passage Title Sheet.dwg 11/26/2018 1:48 PM

GENERAL NOTES:

1. VERTICAL AND HORIZONTAL ALIGNMENTS SHOWN ON THESE PLANS ARE SUBJECT TO MINOR REVISIONS.
2. PIPE LENGTHS AND LOCATIONS ARE APPROXIMATE ONLY AND ARE SUBJECT TO ADJUSTMENTS.
3. LIMIT SPEED OF VEHICLES ASSOCIATED WITH CONSTRUCTION TO 25 M.P.H. WHEN IN THE WORK ZONE.
4. THE CONTRACTOR SHALL ENSURE CULVERT PIPES HAVE ADEQUATE PROTECTION FROM HEAVY CONSTRUCTION EQUIPMENT DURING COMPLETION OF BACKFILLING AND GRADING OPERATIONS.
5. THE CONTRACTOR IS REQUIRED TO OBTAIN AN ADEC, APDES PERMIT PRIOR TO THE UTILITY RELOCATION ACTIVITIES. UTILITY RELOCATION WORK DONE BY THE UTILITY COMPANIES WILL BE PERFORMED UNDER THIS PERMIT.
6. A TEMPORARY CONSTRUCTION EASEMENT (TCE) SHALL BE OBTAINED BY THE MATANUSKA-SUSITNA BOROUGH WHEN REQUIRED.
7. THE ESTIMATED AREA OF CLEARING AND GRUBBING IS 0.4 ACRES

LEGEND:

		EXISTING	PROPOSED
COMMUNICATIONS CABLE	(DIRECT BURY)	UGC	UGC
TELEPHONE	(OVERHEAD)	OHT	OHT
	(DIRECT BURY)	UT	UT
ELECTRIC	(OVERHEAD)	OHE	OHE
	(DIRECT BURY)	UE	UE
GAS		G	G
FIBER OPTIC CABLE		FO	FO
TV COAXIAL CABLE		CATV	CATV
EXISTING FENCE			
TREE LINE			
ROW			
PROPERTY LINE			
EXISTING UTILITY EASEMENT			
EXISTING DRAINAGE EASEMENT			
SPECIAL DITCH			
CUT SLOPE			
FILL SLOPE			
EXISTING ROAD/APPROACH/DRIVEWAY			
POLE ANCHOR /w GUY			
ELECTRICAL PEDESTAL		E	E
TELEPHONE PEDESTAL		T	T
CABLE T.V. PEDESTAL		TV	TV
SIGN (FACING)			
TRANSMISSION TOWER [STEEL]			
TRANSMISSION TOWER [WOOD]			
POWER STUB			
CLEANOUT		CO	
PERMANENT CHECK DAM			
STORM DRAIN MANHOLE			
ELECTRIC METER			
ELECTRIC BOX		E	
LIGHT POLE WITH MAST ARM			
CABLE TELEVISION PEDESTAL		TV	
WATER WELL			
DECIDUOUS TREE >4" <12"			
CONIFER TREE >4" <12"			
UTILITY POLE		U	
DETENTION BASIN			

COMMON ABBREVIATIONS

A.C.	ASPHALT CONCRETE	PRC	POINT OF REVERSE CURVE
ALUM.	ALUMINUM	P.T.	POINT OF TANGENCY
BM	BENCH MARK	PT.	POINT
B.O.P.	BEGINNING OF PROJECT	P.U.E.	PUBLIC USE EASEMENT
BC	BRASS CAP	PVI	POINT OF VERTICAL CURVE
BFS	BEGIN FULL SUPERELEVATION	PVMT.	PAVEMENT
BST	BEGIN SUPERELEVATION TRANSITION	R	RADIUS
℄	CENTERLINE	RAM	RECYCLED ASPHALT MATERIAL
CSP	CORRUGATED STEEL PIPE	ROW	RIGHT-OF-WAY
e	RATE OF SUPERELEVATION	RP	RADIUS POINTS
E.	EAST	RT.	RIGHT
EFS	END FULL SUPERELEVATION	S.	SOUTH
℄	FLOWLINE	SDMH	STORM DRAIN MANHOLE
F.O.	FIBER OPTIC	SPA	ALUMINUM STRUCTURAL PLATE ARCH
LT.	LEFT	ST.	STREET
LP	LAYOUT POINT	STA.	STATION/STATIONING
LVC	LENGTH VERTICAL CURVE	SUBD.	SUBDIVISION
MAX.	MAXIMUM	T	TANGENT
MIN.	MINIMUM	TBM	TEMPORARY BENCH MARK
MON.	MONUMENT	TYP.	TYPICAL
N.	NORTH	UG	UNDERGROUND
N.T.S.	NOT TO SCALE	VC	VERTICAL CURVE
O.C.	ON CENTER	VPI	VERTICAL POINT OF INTERSECTION
P.C.	POINT OF CURVATURE	W.	WEST
PED	PEDESTRIAN	WB	WEST BOUND
℘	PROPERTY LINE	W/	WITH
PI	POINT OF INTERSECTION		

PROJECT SUMMARY

NAME	BEGIN STATION	END STATION	PROJECT LENGTH	LENGTH OF GRADING	WIDTH	DESIGN SPEED
MARBLE WAY	9+37.33	14+45.25	507.92'	397.33'	24'	25 MPH

CALL BEFORE YOU DIG!

CONTRACTOR SHALL CALL A MINIMUM OF
3 DAYS IN ADVANCE OF CONSTRUCTION

ALASKA DIGLINE....907-278-3121 OR 800-478-3121

CALL OR GO TO WWW.AKONECALL.COM/STATEWIDE.HTM
FOR MEMBER LIST OF WHO WILL BE NOTIFIED

STATE OF ALASKA
4QTH
95%
11/26/18
NO. CE 12013
11/26/2018
REGISTERED PROFESSIONAL ENGINEER

BY	DATE	REVISION

Stantec
PLANS DEVELOPED BY:
STANTEC CONSULTING SERVICES INC.
351 W. Parks Hwy., Suite 200
Wasilla, Alaska 99654
Phone: (907) 376-7815
C.A. #126386

MARBLE WY AT COTTONWOOD
CR. FISH PASSAGE
MATANUSKA-SUSITNA BOROUGH
LEGEND, ABBREVIATIONS AND NOTES

DATE: 11/26/2018
SHEET: A2 OF A3
PROJECT NUMBER: 18-14-1793

Designed By:
Drawn By:
Checked By:
Date Revised: 11/26/2018, 1:48 PM
Layout Name: Notes-Abbreviations
File Path and Name: U:\204706540O\drawing\C\sheets\18-14-1793 Marble Way at Cottonwood Creek Fish Passage Notes and Abbr.dwg

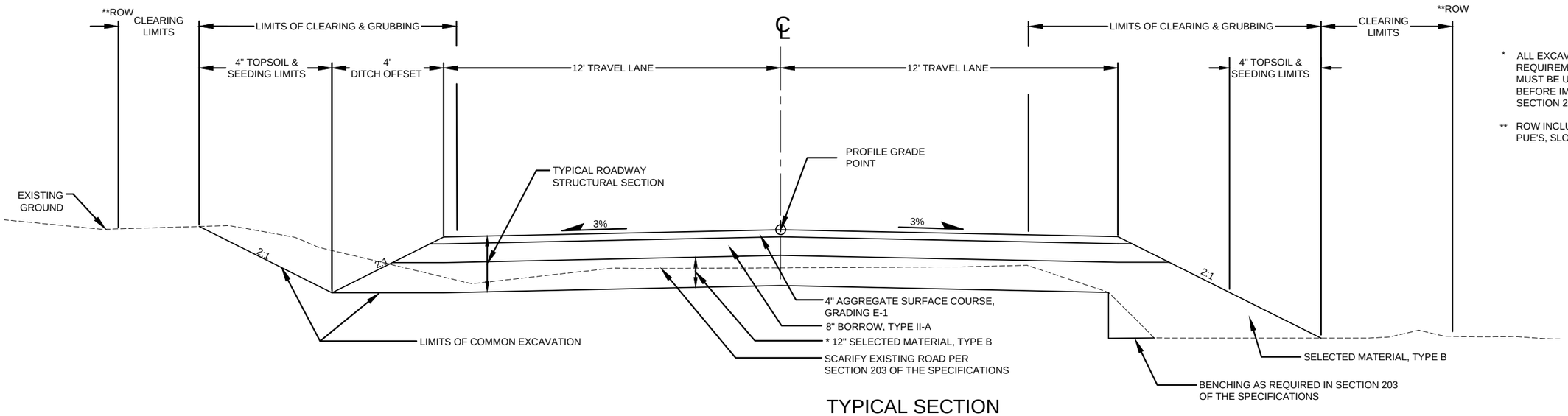

* ALL EXCAVATED MATERIALS MEETING THE REQUIREMENTS OF SELECTED MATERIAL, TYPE B MUST BE USED TO CONSTRUCT PROJECT FILLS BEFORE IMPORTING BORROW, TYPE B. SEE SECTION 203 OF THE SPECIFICATIONS.

** ROW INCLUDES ALL EASEMENTS (SECTION LINES, PUE'S, SLOPE, ETC.)

TYPICAL SECTION
CUT, FILL AND STRUCTURAL SECTION TYPICAL
BOTH SIDES OF ROADWAY
STA. 9+67 TO STA. 11+15
STA. 12+55 TO STA 13+84.4

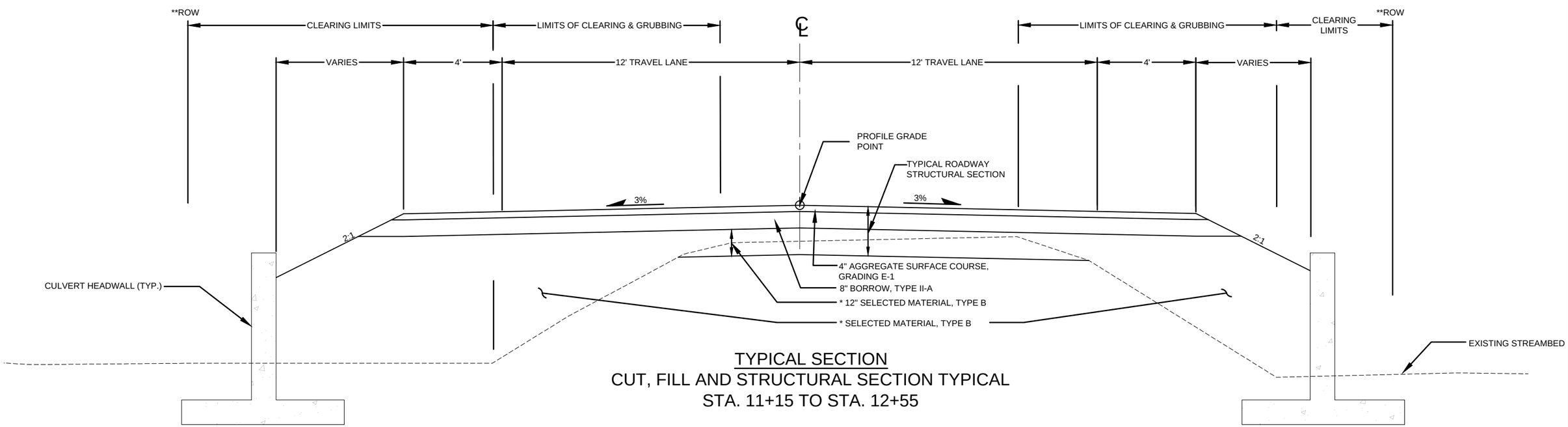

TYPICAL SECTION
CUT, FILL AND STRUCTURAL SECTION TYPICAL
STA. 11+15 TO STA. 12+55

STATE OF ALASKA 49TH 95% 11/26/18 No. CE 9203 11/26/2018 REGISTERED PROFESSIONAL ENGINEER

BY	DATE	REVISION

Stantec
PLANS DEVELOPED BY:
STANTEC CONSULTING SERVICES INC.
351 W. Parks Hwy., Suite 200
Wasilla, Alaska 99654
Phone: (907) 376-7815
C.A. #126386

MARBLE WY AT COTTONWOOD CR. FISH PASSAGE
MATANUSKA-SUSITNA BOROUGH
TYPICAL SECTIONS

DATE: 11/26/2018
SHEET: B1 OF B1
PROJECT NUMBER: 18-14-1793

Date Revised: 11/26/2018, 1:49 PM
Layout Name: Typical Sections
File Path and Name: U:\204706540O\drawing\C\sheets\18-14-1793 Marble Way at Cottonwood Creek Fish Passage Typical Sections.dwg
Designed By:
Drawn By:
Checked By:

ESTIMATE OF QUANTITIES - BASIC BID

ITEM NO.	ITEM	UNIT	QUANTITY
201(3B)	CLEARING AND GRUBBING	LUMP SUM	ALL REQ'D
202(1)	REMOVAL OF STRUCTURES AND OBSTRUCTIONS	LUMP SUM	ALL REQ'D
202(4)	REMOVAL OF CULVERT PIPE	LINEAR FOOT	94
203(1)	COMMON EXCAVATION	CUBIC YARD	4,672
203(6)	BORROW, TYPE B	TON	1,649
203(19)	BORROW, TYPE II-A	TON	4,773
301(3)	AGGREGATE SURFACE COURSE, GRADING E-1	TON	339
501(1)	CLASS A CONCRETE	LUMP SUM	ALL REQ'D
602(2A)	STRUCTURAL PLATE PIPE-ARCH 12'-10" SPAN, 8'-4" RISE, 12 GAGE	LINEAR FOOT	70
602(2B)	STRUCTURAL PLATE PIPE-ARCH 18'-1" SPAN, 11'10" RISE, 12 GAGE	LINEAR FOOT	70
603(1-12)	12 INCH CSP	LINEAR FOOT	106
606(1)	W-BEAM GUARDRAIL	LINEAR FOOT	188
606(6)	REMOVING AND DISPOSING OF GUARDRAIL	LINEAR FOOT	100
606(11)	EXTRUDER TERMINAL (ET-2000)	EACH	4
615(2)	REMOVE AND RELOCATE EXISTING SIGN	EACH	7
615(6)	SALVAGE SIGN	EACH	6
618(2)	SEEDING	POUND	31
620(1)	TOPSOIL	SQUARE YARD	1,700
639(1)	RESIDENCE DRIVEWAY	EACH	3
640(1)	MOBILIZATION AND DEMOBILIZATION	LUMP SUM	ALL REQ'D
641(1)	EROSION AND POLLUTION CONTROL ADMINISTRATION	LUMP SUM	ALL REQ'D
641(3)	TEMPORARY EROSION AND POLLUTION CONTROL	LUMP SUM	ALL REQ'D
642(1)	CONSTRUCTION SURVEYING	LUMP SUM	ALL REQ'D
642(2)	TWO PERSON SURVEY PARTY	HOUR	5
643(1)	TRAFFIC MAINTENANCE	LUMP SUM	ALL REQ'D
643(2)	PERMANENT CONSTRUCTION SIGNING	LUMP SUM	ALL REQ'D
671(1)	ROOTWAD INSTALLATION	LINEAR FOOT	40
671(2)	BRUSH LAYERING	LINEAR FOOT	60
671(3)	STREAM SUBSTRATE	CUBIC YARD	401
671(4)	STREAM DIVERSION AND DEWATERING	LUMP SUM	ALL REQ'D
800(1)	INTERIM WORK AUTHORIZATION	CONTINGENT SUM	ALL REQ'D

202(1) - REMOVAL OF STRUCTURES AND OBSTRUCTIONS

STATION	OFFSET		COMMENTS
	LEFT	RIGHT	
11+41.4 TO 11+81.1		X	SHEET METAL WALL HELD IN PLACE BY GUARDRAIL POSTS
11+66.5 LT. TO 12+15.2, RT.	-	-	SHEET METAL WALL HELD IN PLACE BY GUARDRAIL POSTS

501(1) CLASS A CONCRETE

HEADWALLS	ESTIMATED QUANTITY (C.Y.)
UPSTREAM	84
DOWNSTREAM	69
TOTAL	153

606 - GUARDRAIL SUMMARY

STATION TO STATION	OFFSET		606(1) W-BEAM GUARDRAIL (L.F.)	606(11) EXTRUDER TERMINAL (EA.)	COMMENTS
	LEFT	RIGHT			
10+66.5 TO 12+34.5		X	87.5	2	
11+21.2 TO 13+00.7	X		100	2	
TOTALS			187.5	4	

606(6) REMOVING AND DISPOSING OF GUARDRAIL

STATION TO STATION	LENGTH	COMMENTS
11+41.4, RT. TO 11+81.1, RT.	46	
11+66.5 LT. TO 12+15.2, RT.	54	
TOTALS	100	

615(2) - REMOVE AND RELOCATE EXISTING SIGN

SIGN NO.	EXISTING LOCATON			NEW LOCATION				LEGEND	POST	
	STATION	OFFSET (FT.)		STATION	OFFSET (FT.)		FACING TRAFFIC		TYPE	EMBEDMENT
		LEFT	RIGHT		LEFT	RIGHT				
1	11+45.6		6.0					F & G SIGN	EXISTING	SOIL
2	11+54.5		3.5					OBJECT MARKER	EXISTING	SOIL
3	11+79.6	9.9						OBJECT MARKER	EXISTING	SOIL
4	11+90.8		26.0					OBJECT MARKER	EXISTING	SOIL
5	12+16.0		34.3					COTTONWOOD CR - SALMON INFO	EXISTING	SOIL
6	12+25.3	8.7						OBJECT MARKER	EXISTING	SOIL
7	13+60.6	16.4						20 MPH		
TOTAL		7								

615(6) - SALVAGE SIGN

STATION	OFFSET		LEGEND	REMARKS
	LEFT	RIGHT		
9+83.4		X	ONE LANE BRIDGE	
10+49.6	X		CHEVRON	
10+80.5	X		CHEVRON	
12+45.4	X		CHEVRON	
12+65.7	X		CHEVRON	
13+40.9	X		ONE LANE BRIDGE	
TOTAL	6			

639(1) - RESIDENCE DRIVEWAY SUMMARY

STATION	OFFSET		WIDTH (FT.)	RADIUS (FT.)		603(1-12) (L.F.)	APPROX. MATCH GRADE	COMMENTS
	LEFT	RIGHT		LEFT	RIGHT			
10+37.5		X	10	6	6	20	8.30%	
12+78.0		X	40	6	6	50	-7.05%	
12+49.7		X	24	6	6	36	3.55%	
TOTALS	3					106		

STATE OF ALASKA
4QTH
95%
11/26/18
No. CE 9204
11/26/2018
REGISTERED PROFESSIONAL ENGINEER

BY	DATE	REVISION

Stantec
PLANS DEVELOPED BY:
STANTEC CONSULTING SERVICES INC.
351 W. Parks Hwy., Suite 200
Wasilla, Alaska 99654
Phone: (907) 376-7815
C.A. #126386

MARBLE WY AT COTTONWOOD CR. FISH PASSAGE
MATANUSKA-SUSITNA BOROUGH
ESTIMATE OF QUANTITIES & SUMMARY TABLES

DATE: 11/26/2018
SHEET: C1 OF C2
PROJECT NUMBER: 18-14-1793

Designed By:
Drawn By:
Date Revised: 11/26/2018, 1:49 PM
Layout Name: Estimate of Quantities and Summary Tables
File Path and Name: U:\204705400\drawing\C\sheets\18-14-1793 Marble Way at Cottonwood Creek Fish Passage Estimate of Quantities and Summary Tables.dwg

EARTHWORK SUMMARY

LOCATION		EXCAVATION		EMBANKMENT	MISC.	
SHEET	STATION TO STATION	COMMON EXCAVATION (C.Y.)	WASTE (C.Y.)	SELECTED MATERIAL, TYPE "B" (C.Y.)	BORROW, TYPE II-A (C.Y.)	AGGREGATE SURFACE COURSE, GRADING E-1 (C.Y.)
F1	9+67.07 TO 13+84.40	2472	2472	767	2232	147
DRIVEWAYS	VARIES	0	0	4	0	7
DIVERSON CHANNEL	11+75 TO 12+20	2200	0	0	0	0
SUB-TOTALS		4672	2472	771	2232	154
TOTALS		4672	2472	771	2232	154
		C.Y.	C.Y.	C.Y.	C.Y.	C.Y.
BID QUANTITIES		COMMON EXCAVATION		BORROW, TYPE "B"	BORROW, TYPE II-A	AGGREGATE SURFACE COURSE, GRADING E-1
		4672		1649	4773	339
		(C.Y.)		(TON)	(TON)	(TON)

EARTHWORKS SUMMARY NOTES

1. COMMON EXCAVATION QUANTITIES = CROSS SECTION END AREA COMPUTED VOLUMES.
2. BID QUANTITIES FOR BORROW, TYPE B, BORROW, TYPE II-A AND AGGREGATE SURFACE COURSE, GRADING E-1 = NEATLINE * ESTIMATING FACTOR * 1.1 RESPECTIVELY.

BASIS OF ESTIMATE

ITEM	ITEM NO.	ESTIMATING FACTOR
BORROW, TYPE B	203(5)	144 LBS./C.F.
BORROW, TYPE II-A	203(19)	144 LBS./C.F.
AGGREGATE SURFACE COURSE, GRADING E-1	301(4)	148 LBS./C.F.

Date Revised: 11/26/2018, 1:49 PM
Layout Name: Estimate of Quantities and Summary Tables (2)
File Path and Name: U:\204706540O\drawing\C\sheets\18-14-1793 Marble Way at Cottonwood Creek Fish Passage Estimate of Quantities and Summary Tables.dwg
Designed By:
Drawn By:

STATE OF ALASKA
4QTH
95%
11/26/18
NO. CE 12043
11/26/2018
REGISTERED PROFESSIONAL ENGINEER

BY	DATE	REVISION

Stantec
PLANS DEVELOPED BY:
STANTEC CONSULTING SERVICES INC.
351 W. Parks Hwy., Suite 200
Wasilla, Alaska 99654
Phone: (907) 376-7815
C.A. #126386

MARBLE WAY AT COTTONWOOD
CR. FISH PASSAGE
MATANUSKA-SUSITNA BOROUGH
ESTIMATE OF QUANTITIES & SUMMARY TABLES

DATE: 11/26/2018
SHEET: C2 OF C2
PROJECT NUMBER: 18-14-1793

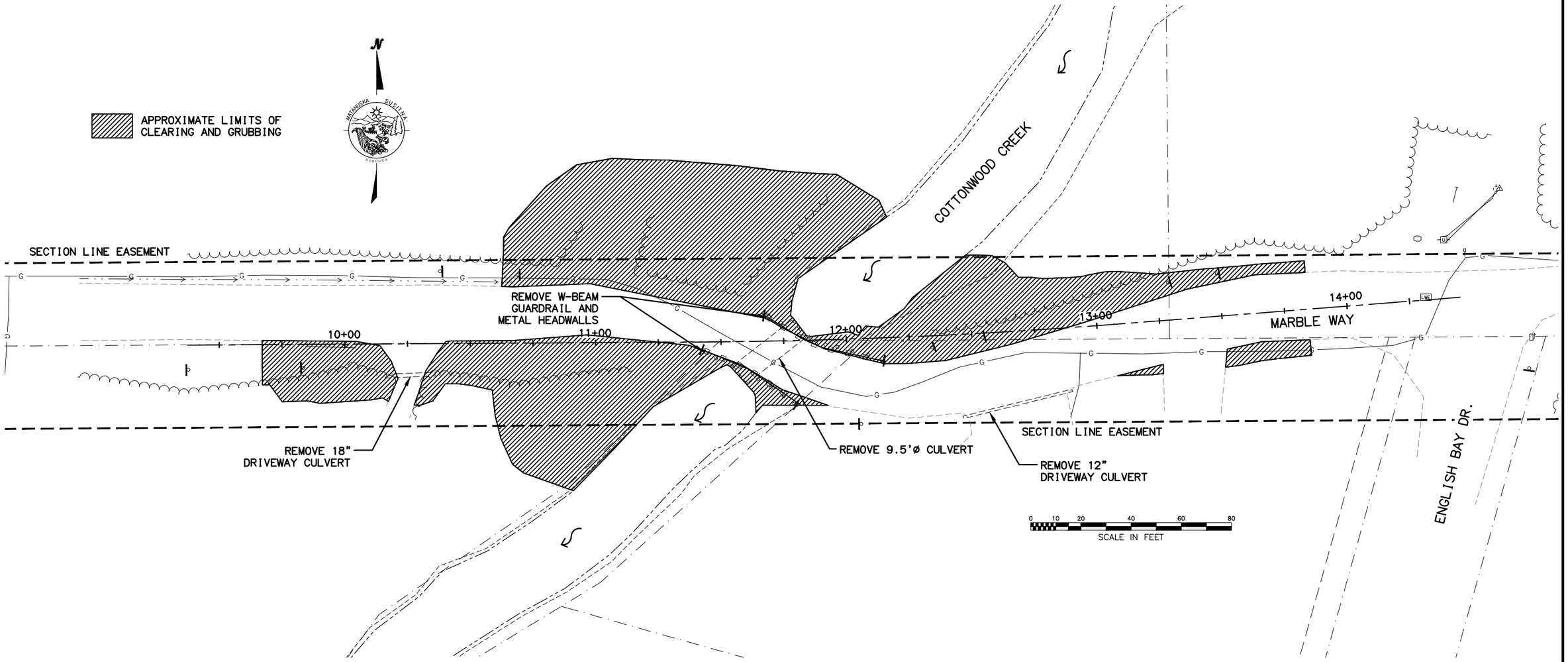

DEMOLITION PLAN

Date Revised:	11/26/2018, 1:49 PM
Layout Name:	Demolition Plan
File Path and Name:	U:\20470654\00\drawing\C\sheets\18-14-1793 Marble Way at Cottonwood Creek Fish Passage Demolition Plan.dwg

Designed By:
Drawn By:
Checked By:

STATE OF ALASKA 49TH 95% 11/26/18 No. CE 9203 11/26/2018 REGISTERED PROFESSIONAL ENGINEER

BY	DATE	REVISION

Stantec

PLANS DEVELOPED BY:
STANTEC CONSULTING SERVICES INC.
351 W. Parks Hwy., Suite 200
Wasilla, Alaska 99654
Phone: (907) 376-7815
C.A. #126386

MARBLE WY AT COTTONWOOD CR. FISH PASSAGE
MATANUSKA-SUSITNA BOROUGH

DEMOLITION PLAN

DATE: 11/26/2018
SHEET: E1 OF E8
PROJECT NUMBER: 18-14-1793

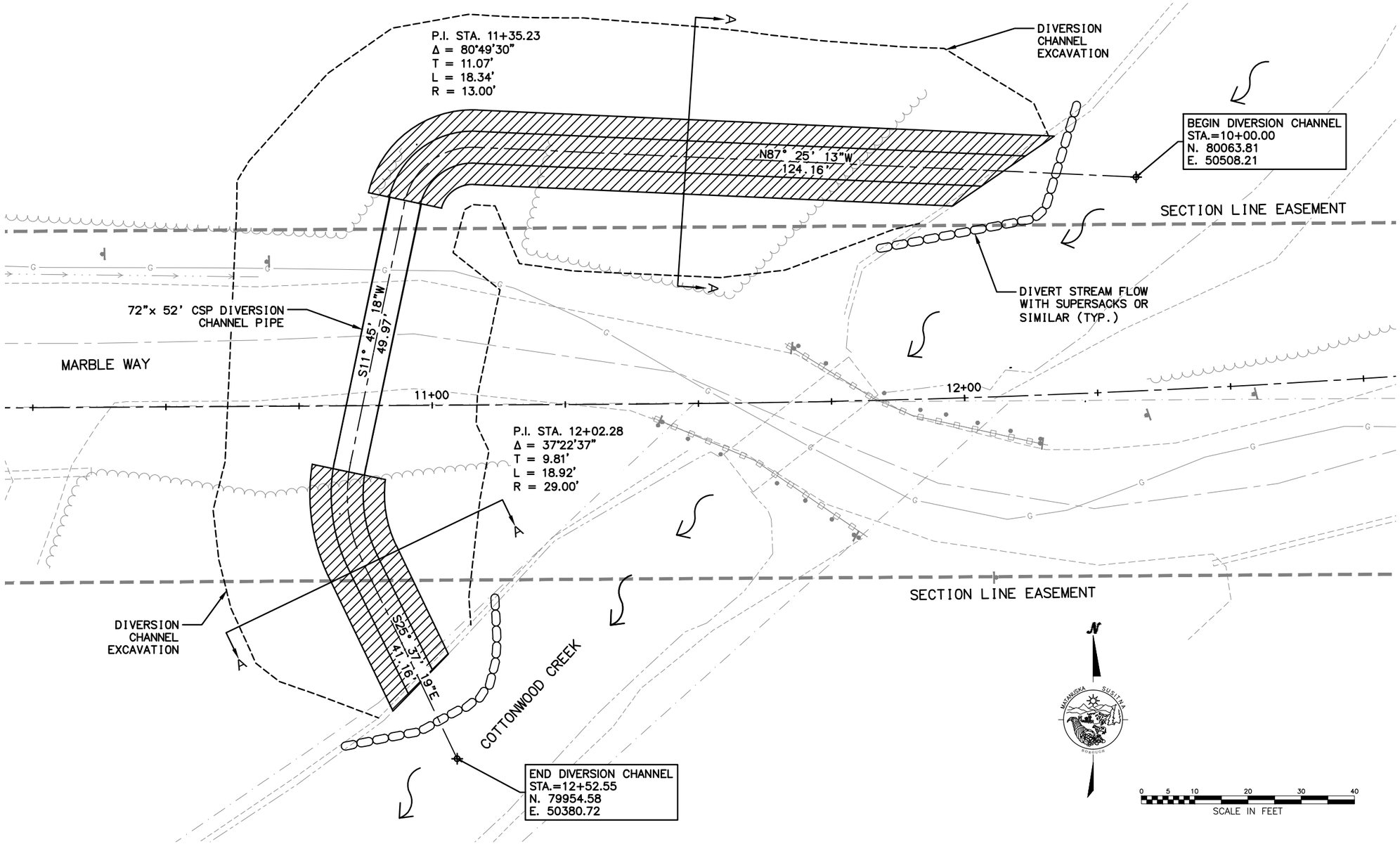

PHASE 1 DIVERSION PLAN
DIVERSION CHANNEL CONSTRUCTION

PHASE 1 NOTES:

1. PLACE BARRICADES AND IMPLEMENT TEMPORARY TRAFFIC CONTROL PLAN.
2. IF AN ALTERNATE CHANNEL SHAPE IS PROPOSED, IT MUST BE CAPABLE OF CARRYING A PEAK STREAM FLOW OF 100 CFS DURING THE CONSTRUCTION PERIOD.
3. DURING EXCAVATION, THE DIVERSION CHANNEL MUST BE ISOLATED FROM THE STREAM TO BE DIVERTED AT THE UPSTREAM AND DOWNSTREAM ENDS OF THE DIVERSION CHANNEL.
4. CONTRACTOR TO ENSURE TRANSITION FROM THE DIVERSION CHANNEL INTO AND OUT OF PIPE IS SECURE, AND EROSION AND PIPING ARE AVOIDED DURING THE ENTIRE DIVERSION PERIOD.

STATE OF ALASKA 49TH 95% 11/26/18 No. CE 11203 11/26/2018 REGISTERED PROFESSIONAL ENGINEER

BY	DATE	REVISION

Stantec
PLANS DEVELOPED BY:
STANTEC CONSULTING SERVICES INC.
351 W. Parks Hwy., Suite 200
Wasilla, Alaska 99654
Phone: (907) 376-7815
C.A. #126386

MARBLE WY AT COTTONWOOD CR. FISH PASSAGE
MATANUSKA-SUSITNA BOROUGH
DIVERSION PLAN

DATE: 11/26/2018
SHEET: E2 OF E8
PROJECT NUMBER: 18-14-1793

Date Revised: 11/26/2018, 1:50 PM
Layout Name: Diversion Plan
File Path and Name: U:\204706540O\drawing\C\sheets\18-14-1793 Marble Way at Cottonwood Creek Fish Passage Diversion Channel Design.dwg
Designed By:
Drawn By:
Checked By:

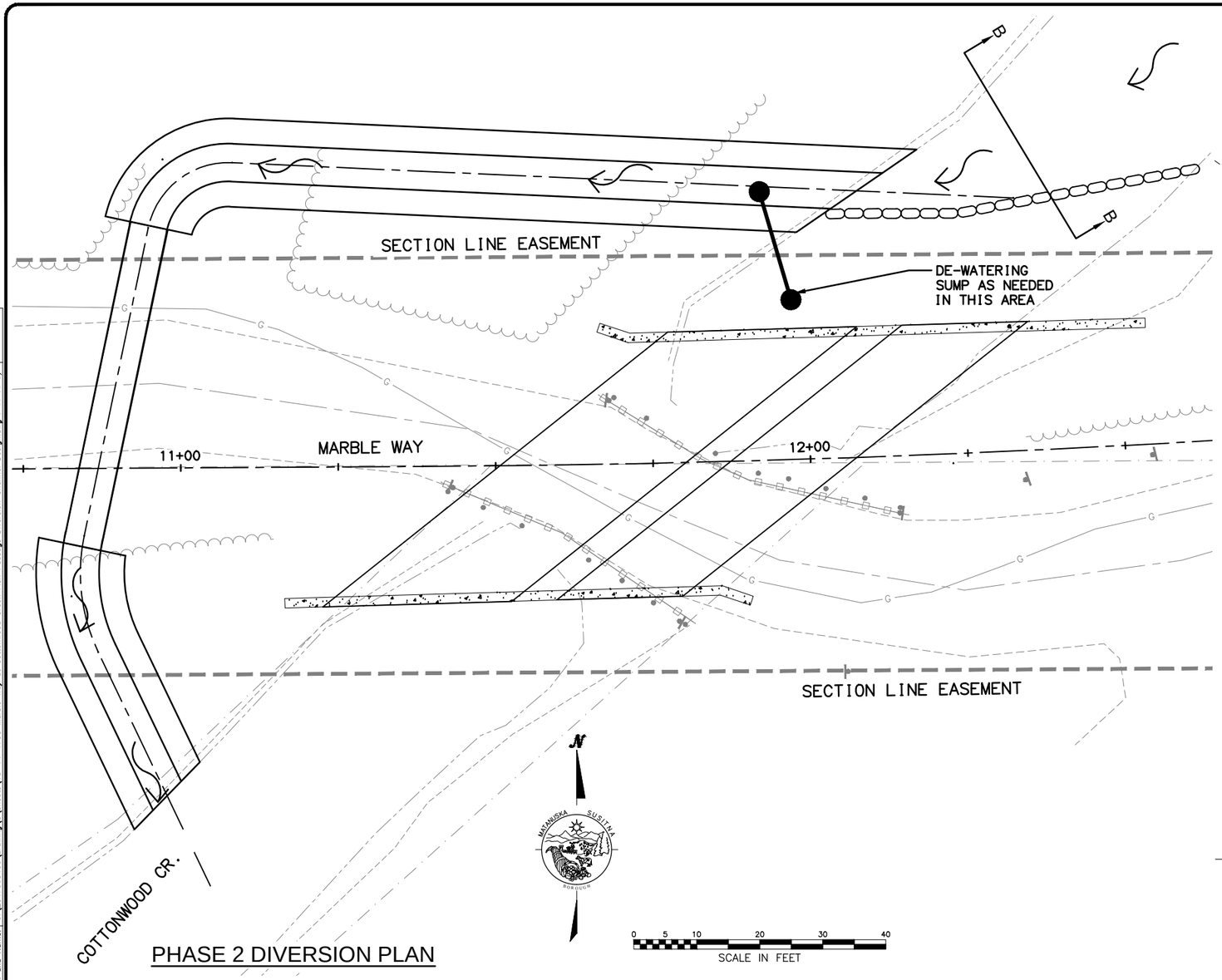

PHASE 2 DIVERSION PLAN

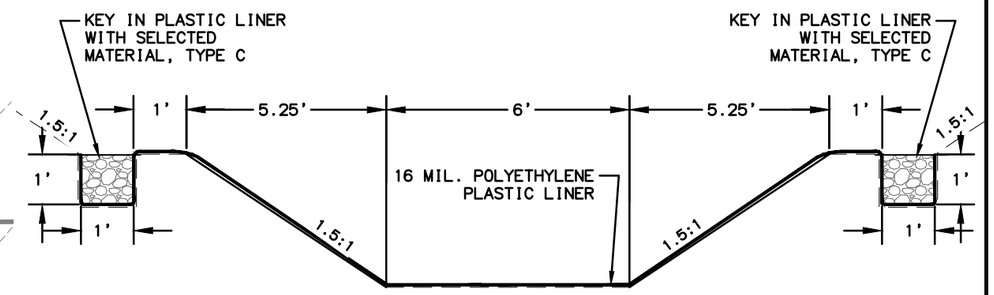

SECTION A-A
DIVERSION CHANNEL
NTS

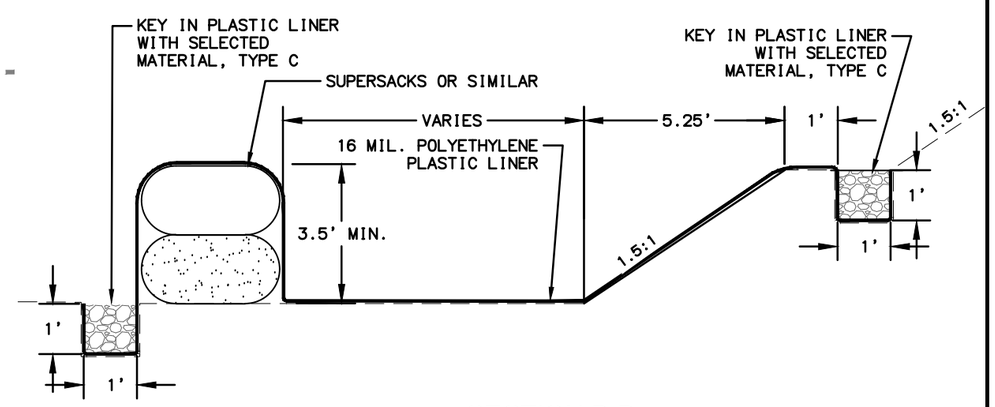

SECTION B-B
STREAM DIVERSION
NTS

PHASE 2 NOTES:

1. DIVERSION OF FLOW INTO THE DIVERSION CHANNEL MUST BE ACCOMPLISHED BY FIRST REMOVING THE PHASE 1 DOWNSTREAM DIVERSION COMPONENTS (SUPERSACKS, ETC.), THEN REPOSITIONING THE UPSTREAM DIVERSION COMPONENTS TO DIVERT COTTONWOOD CREEK INTO THE DIVERSION CHANNEL.
2. AFTER THE REMOVAL OF THE EXISTING CULVERT AND THE INSTALLATION OF THE NEW CULVERTS, HEADWALLS AND RIPRAP, THE DIVERSION STRUCTURES MAY BE REMOVED AND THE BOTH ENDS OF THE DIVERSION CHANNEL BLOCKED OFF. THE TEMPORARY CULVERT MAY THEN BE REMOVED, THE CHANNEL BACKFILLED WITH THE EXCAVATED MATERIAL UP TO THE ORIGINAL GROUND AND COVERED WITH TOPSOIL AND SEEDED.
3. FISH THAT BECOME STRANDED IN DE-WATERED CHANNELS, INCLUDING THE DIVERSION CHANNEL AFTER THE REMOVAL OF THE DIVERSION COMPONENTS, MUST BE IMMEDIATELY CAPTURED AND RETURNED TO THE ACTIVE CHANNEL WITHOUT FURTHER HARM.
4. FISH PASSAGE MUST BE MAINTAINED AT ALL TIMES UNLESS OTHERWISE APPROVED BY THE DIVISION OF HABITAT.
5. DE-WATER TRENCH AND WORK AREA WITH PUMP(S) IF REQUIRED AND APPROVED BY THE ENGINEER.
6. ALL DISCHARGE POINTS REQUIRE PERMANENT OR TEMPORARY VELOCITY CONTROLS.
7. PROVIDE SEDIMENT REMOVAL FOR ALL DE-WATERING ACTIVITY PRIOR TO DISCHARGE FROM THE PROJECT INTO ANY WATER OF THE U.S.

STATE OF ALASKA 49TH 95% 11/26/18 No. CE 9203 11/26/2018 REGISTERED PROFESSIONAL ENGINEER

BY	DATE	REVISION

Stantec
PLANS DEVELOPED BY:
STANTEC CONSULTING SERVICES INC.
351 W. Parks Hwy., Suite 200
Wasilla, Alaska 99654
Phone: (907) 376-7815
C.A. #126386

MARBLE WY AT COTTONWOOD CR. FISH PASSAGE
MATANUSKA-SUSITNA BOROUGH
DIVERSION PLAN

DATE: 11/26/2018
SHEET: E3 OF E8
PROJECT NUMBER: 18-14-1793

Date Revised: 11/26/2018, 1:50 PM
Layout Name: Diversion Plan (2)
File Path and Name: U:\2047065400\Drawing\C\sheets\18-14-1793 Marble Way at Cottonwood Creek Fish Passage Diversion Channel Design.dwg
Designed By:
Drawn By:
Checked By:

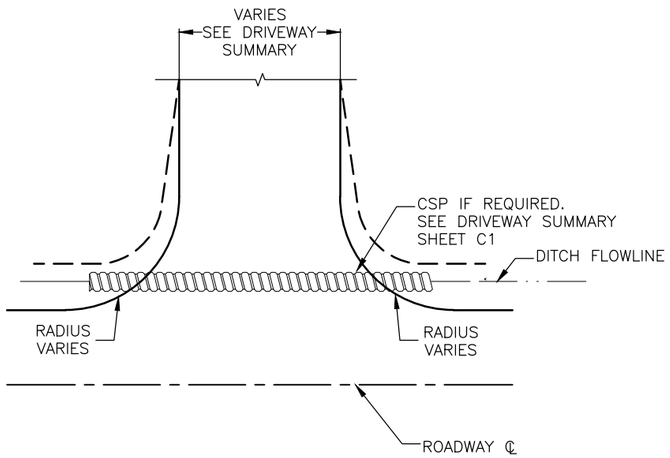

DRIVEWAY PLAN VIEW DETAIL
CUT

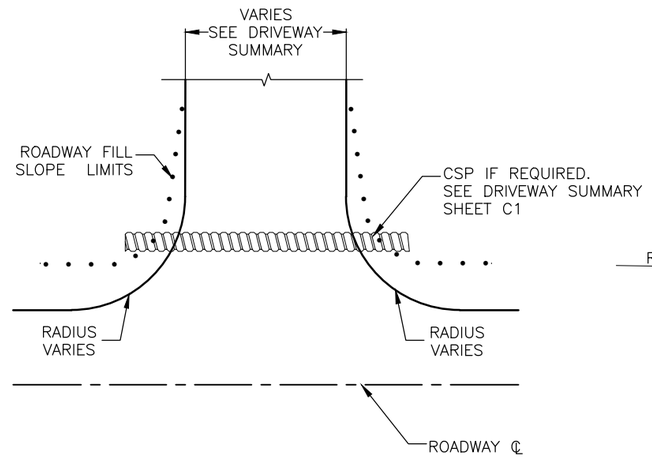

DRIVEWAY PLAN VIEW DETAIL
FILL

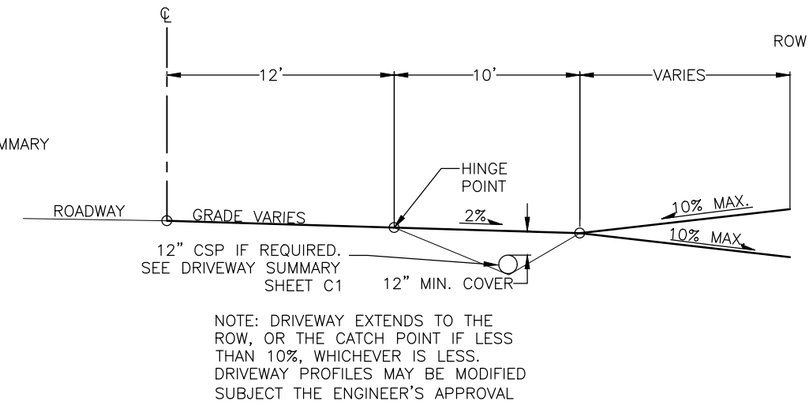

DRIVEWAY PROFILE DETAIL

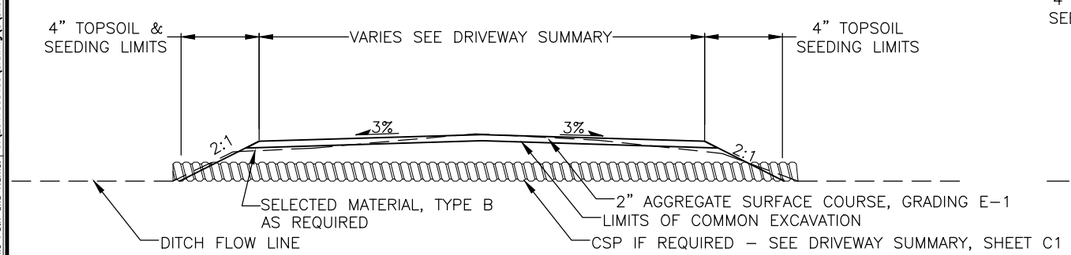

DRIVEWAY SECTION DETAIL
CUT

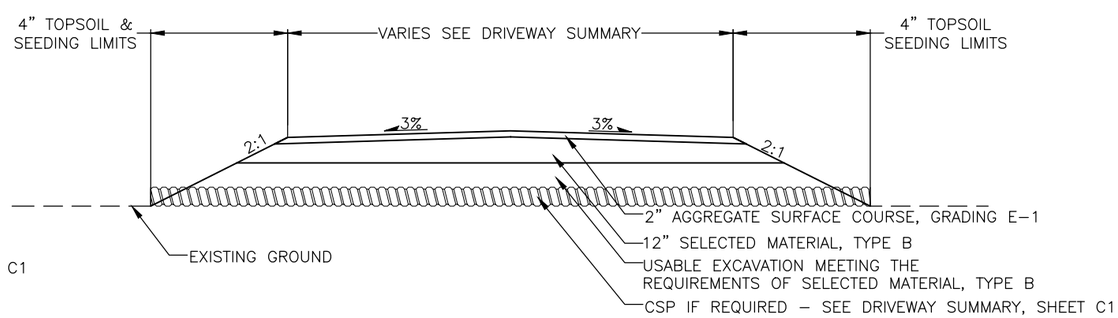

DRIVEWAY SECTION DETAIL
FILL

STATE OF ALASKA
4QTH
95%
11/26/18
No. 12-2013
11/26/2018
REGISTERED PROFESSIONAL ENGINEER

BY	DATE	REVISION

Stantec
PLANS DEVELOPED BY:
STANTEC CONSULTING SERVICES INC.
351 W. Parks Hwy., Suite 200
Wasilla, Alaska 99654
Phone: (907) 376-7815
C.A. #126386

MARBLE WY AT COTTONWOOD
CR. FISH PASSAGE
MATANUSKA-SUSITNA BOROUGH
DETAILS

DATE: 11/26/2018
SHEET: E4 OF E8
PROJECT NUMBER: 18-14-1793

Designed By:
Drawn By:
Checked By:
Date Revised: 11/26/2018, 1:50 PM
Layout Name: Miscellaneous Details
File Path and Name: U:\204706540O\drawing\C\sheets\18-14-1793 Marble Way at Cottonwood Creek Fish Passage Misc Details.dwg

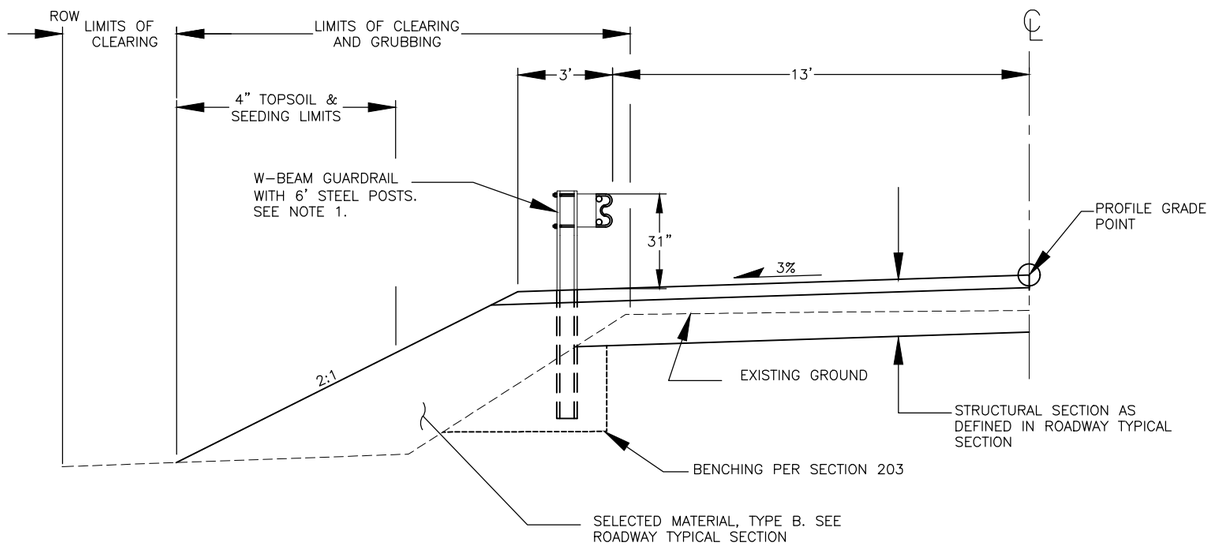

NOTES:

1. CONTACTOR SHALL AUGER IN HOLES FOR STEEL GUARDRAIL POST TO AVOID DAMAGE TO CULVERTS. DAMAGE TO CULVERTS AS A RESULT OF GUARDRAIL INSTALLATION SHALL BE REPAIRED BY THE CONTRACTOR AT NO EXPENSE TO THE MSB.

GUARDRAIL INSTALLATION DETAIL

TYPICAL BOTH SIDES OF ROADWAY

STATE OF ALASKA 49TH 95% 11/26/18 No. CE 9203 11/26/2018 REGISTERED PROFESSIONAL ENGINEER

BY	DATE	REVISION

Stantec
PLANS DEVELOPED BY:
STANTEC CONSULTING SERVICES INC.
351 W. Parks Hwy., Suite 200
Wasilla, Alaska 99654
Phone: (907) 376-7815
C.A. #126386

MARBLE WY AT COTTONWOOD
CR. FISH PASSAGE
MATANUSKA-SUSITNA BOROUGH

DETAILS

DATE: 11/26/2018
SHEET: E5 OF E8
PROJECT NUMBER: 18-14-1793

Designed By:
Drawn By:
Checked By:
Date Revised: 11/26/2018, 1:50 PM
Layout Name: Miscellaneous Details (2)
File Path and Name: U:\204706400\drawing\C\sheets\18-14-1793 Marble Way at Cottonwood Creek Fish Passage Misc Details.dwg

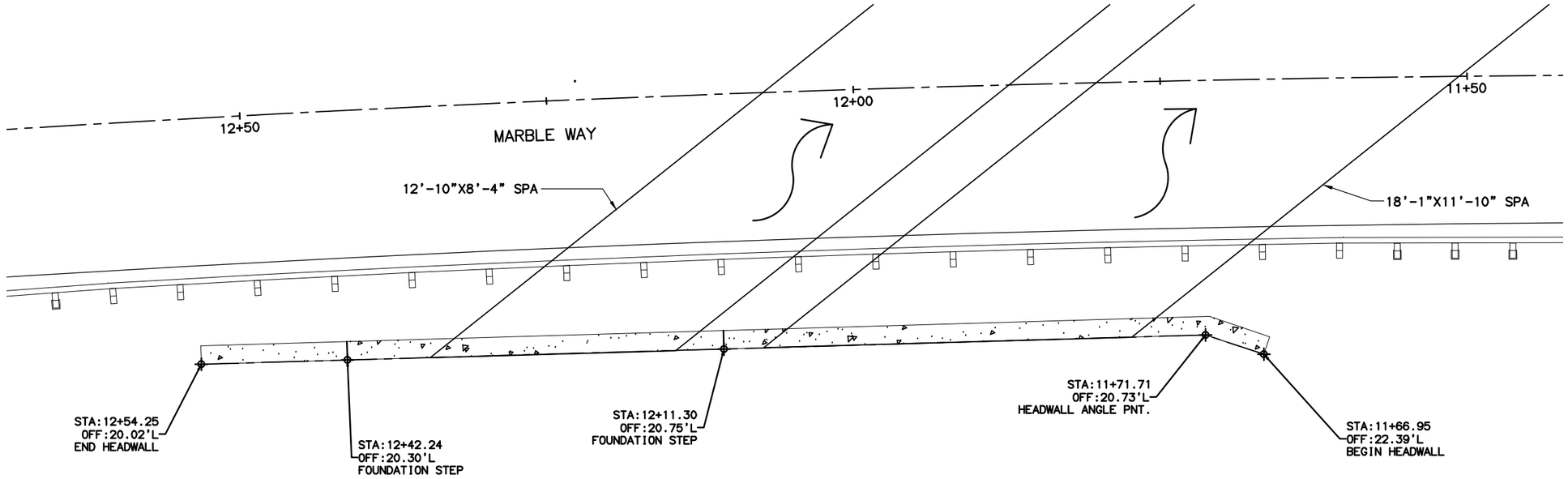

UPSTREAM HEADWALL PLAN

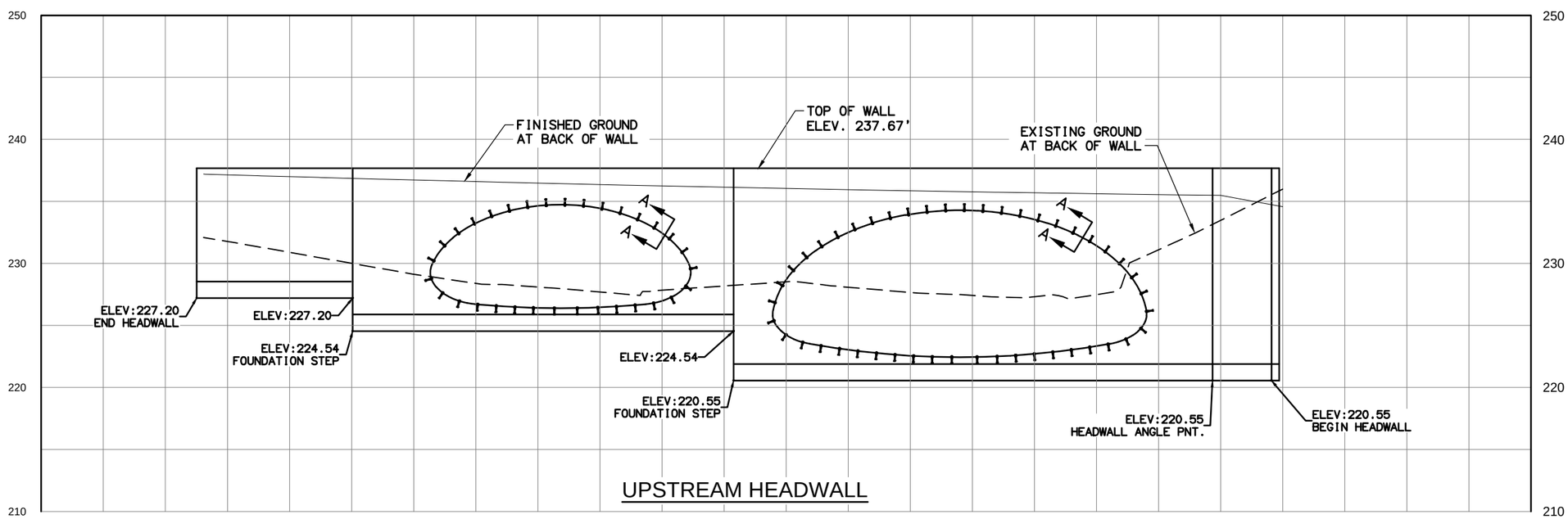

UPSTREAM HEADWALL

Designed By:
Drawn By:
Checked By:

Date Revised: 11/26/2018, 1:51 PM
Layout Name: Upstream Headwall
File Path and Name: U:\2047065400\drawing\C\sheets\18-14-1793 Marble Way at Cottonwood Creek Fish Passage Headwall Details.dwg

STATE OF ALASKA
49TH
95%
11/26/18
No. CE 9205
11/26/2018
REGISTERED PROFESSIONAL ENGINEER

BY	DATE	REVISION

Stantec
PLANS DEVELOPED BY:
STANTEC CONSULTING SERVICES INC.
351 W. Parks Hwy., Suite 200
Wasilla, Alaska 99654
Phone: (907) 376-7815
C.A. #126386

MARBLE WY AT COTTONWOOD
CR. FISH PASSAGE
MATANUSKA-SUSITNA BOROUGH

HEADWALL DETAILS

DATE: 11/26/2018
SHEET: E6 OF E8
PROJECT NUMBER: 18-14-1793

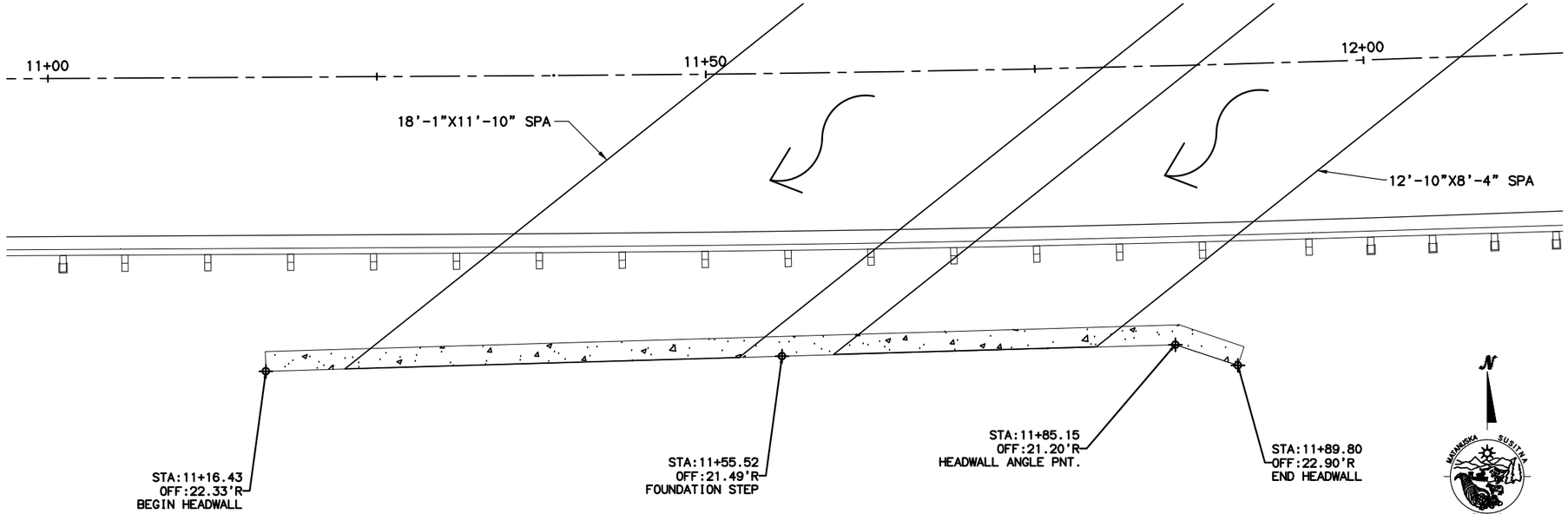

DOWNSTREAM HEADWALL PLAN

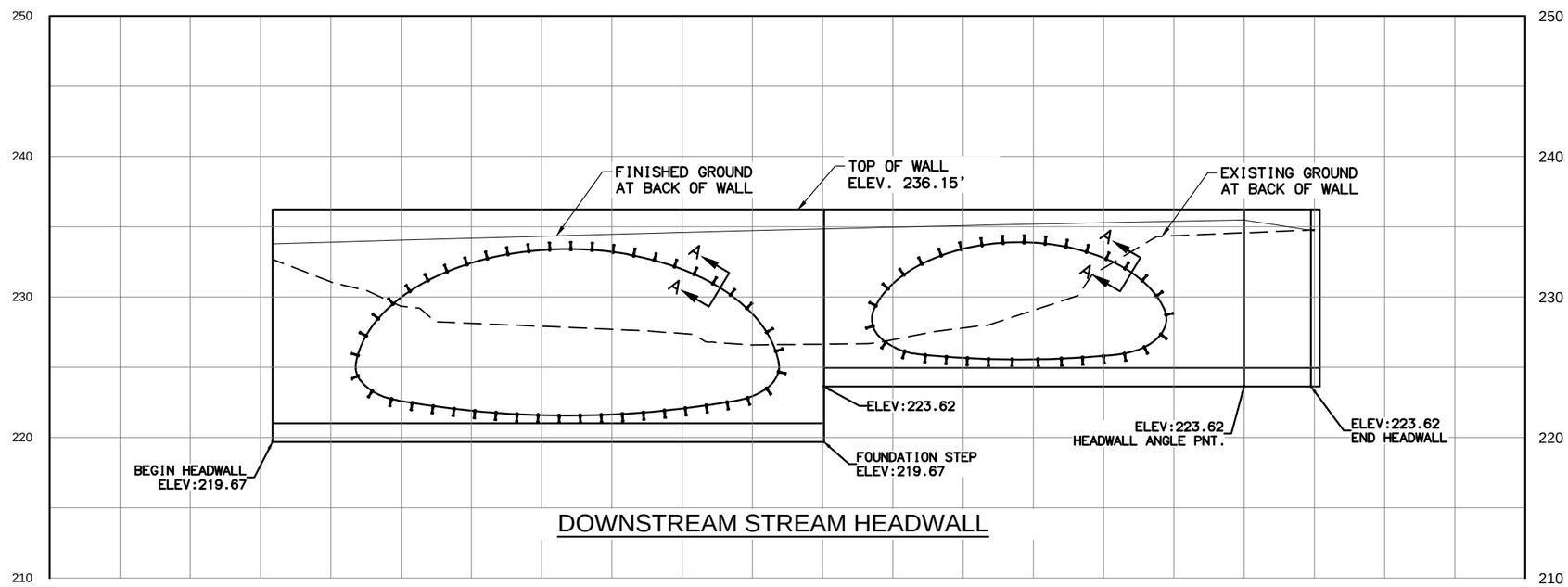

DOWNSTREAM STREAM HEADWALL

STATE OF ALASKA
49TH
95%
11/26/18
No. CE 11203
11/26/2018
REGISTERED PROFESSIONAL ENGINEER

BY	DATE	REVISION

Stantec
PLANS DEVELOPED BY:
STANTEC CONSULTING SERVICES INC.
351 W. Parks Hwy., Suite 200
Wasilla, Alaska 99654
Phone: (907) 376-7815
C.A. #126386

MARBLE WY AT COTTONWOOD
CR. FISH PASSAGE
MATANUSKA-SUSITNA BOROUGH

HEADWALL DETAILS

DATE: 11/26/2018
SHEET: E7 OF E8
PROJECT NUMBER: 18-14-1793

Designed By:
Drawn By:
Checked By:

Date Revised: 11/26/2018, 1:51 PM
Layout Name: Downstream Headwall
File Path and Name: U:\2047065400\drawing\C\sheets\18-14-1793 Marble Way at Cottonwood Creek Fish Passage Headwall Details.dwg

GENERAL STRUCTURAL NOTES

(APPLIES UNLESS NOTED OTHERWISE)

DESIGN LOADS:

SOIL LOADS:

SOIL BEARING PRESSURE	3,000 PSF
SOIL FRICTION ANGLE	28°
ACTIVE SOIL PRESSURE AT HEEL	91.9 PSF/FT
ACTIVE SOIL PRESSURE AT TOE	91.9 PSF/FT
PASSIVE PRESSURE	438 PSF/FT

RETAINING WALL DESIGNED TO HAVE PROPER DRAINAGE WITH NO HYDROSTATIC PRESSURE PRESENT.

CONCRETE:

TYPICAL CONCRETE COMPRESSIVE STRENGTHS

CONCRETE	MINIMUM 28 DAY COMPRESSIVE STRENGTH	SLUMP AT PLACEMENT
UNLESS NOTED OTHERWISE, ALL CONCRETE SHALL BE	CLASS A	4" MAXIMUM

ADDITION OF WATER TO THE BATCH FOR MATERIAL WITH INSUFFICIENT SLUMP WILL NOT BE PERMITTED.

REINFORCING:

TYPICAL CLEAR CONCRETE COVERAGE

CONCRETE CAST AGAINST AND PERMANENTLY EXPOSED TO EARTH		3"
FORMED CONCRETE EXPOSED TO EARTH OR WEATHER	#6 AND LARGER	2"
	#5 AND SMALLER	1 1/2"
ALL OTHERS PER LATEST EDITION OF ACI 318.		

LAP SPLICES IN CONCRETE:

ALL SPLICE LOCATIONS SUBJECT TO APPROVAL. PROVIDE BENT CORNER BARS TO MATCH AND LAP WITH HORIZONTAL BARS AT CORNERS AND INTERSECTIONS OF FOOTINGS AND WALLS. REINFORCING BAR SPACINGS GIVEN ARE MAXIMUM ON CENTERS (O.C.). SECURELY TIE ALL BARS IN LOCATION BEFORE PLACING CONCRETE. CONCRETE COLUMN DOWEL EMBEDMENT SHALL BE A STANDARD COMPRESSION DOWEL EMBEDMENT LENGTH ACCORDING TO THE LATEST EDITION OF ACI 318.

MINIMUM INSPECTIONS:

THE MINIMUM INSPECTING AND TESTING IS REQUIRED:

CONCRETE: DURING TAKING OF SPECIMENS AND PLACEMENT OF ALL CONCRETE. SAMPLE (2) SETS OF CYLINDERS EVERY 50 CUBIC YARDS OF CONCRETE. PERFORM STRENGTH TESTING AT 7 AND 28 DAYS: SLUMP, AIR CONTENT, AND TEMPERATURE TESTING.

BOLTS INSTALLED IN CONCRETE: PRIOR TO AND DURING THE PLACEMENT OF CONCRETE AROUND BOLTS.

REINFORCING STEEL: DURING PLACEMENT OF REINFORCING STEEL.

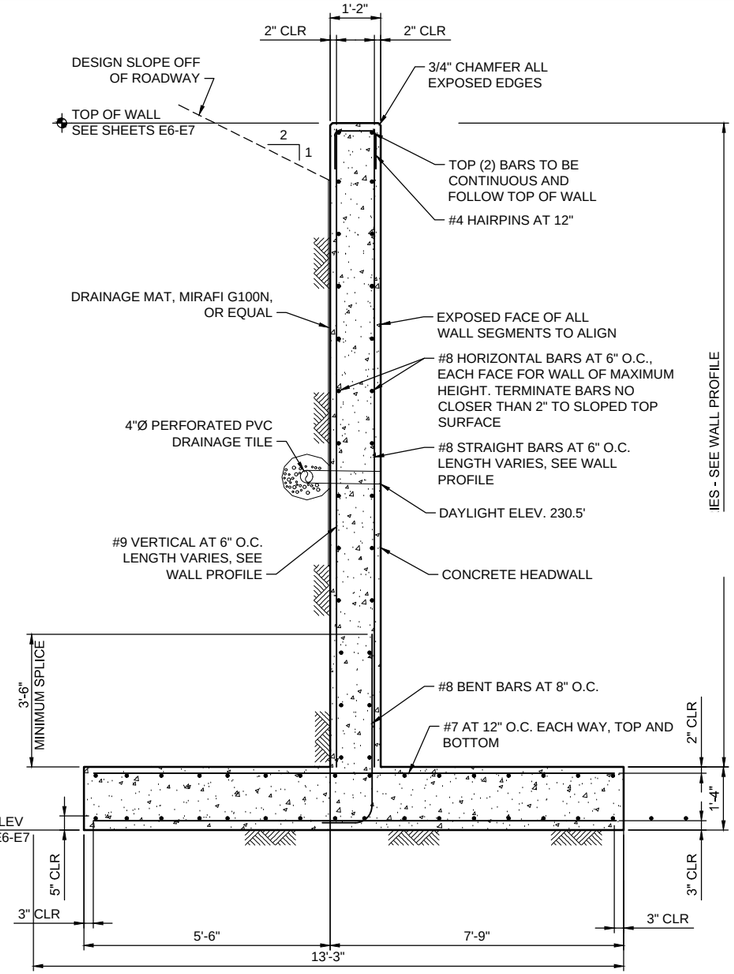

TYPICAL WALL SECTION

MINIMUM SPLICE MASONRY/CONCRETE	
BAR SIZE	SLICE LENGTH
#3	18"
#4	24"
#5	30"
#6	36"
#7	42"
#8	48"
#9	54"

NOTES:

1. UNLESS NOTED OTHERWISE, THESE SPLICE LENGTHS APPLY TO BOTH REINFORCED CONCRETE AND REINFORCED MASONRY CONSTRUCTION.

TYPICAL REBAR SPLICE LENGTHS

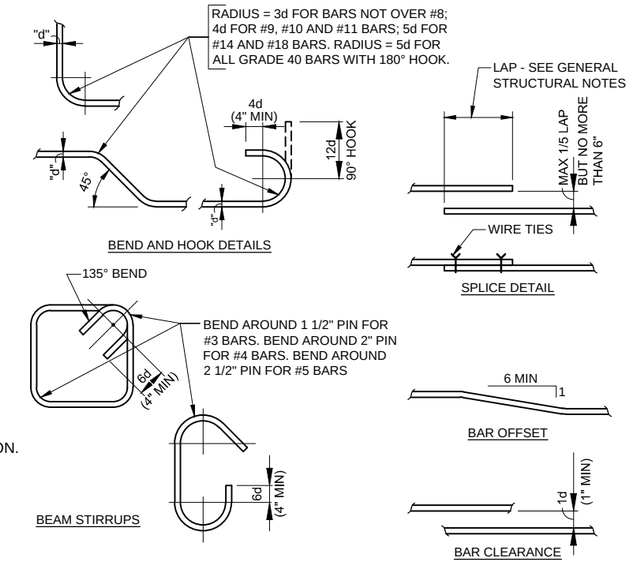

TYPICAL REBAR DETAILS

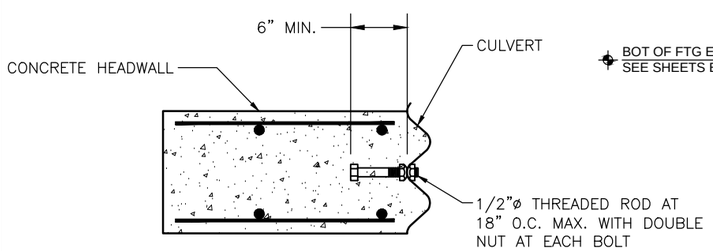

SECTION A-A
CULVERT/HEADWALL CONNECTION

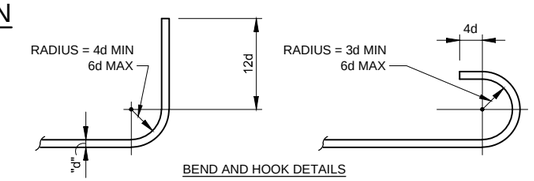

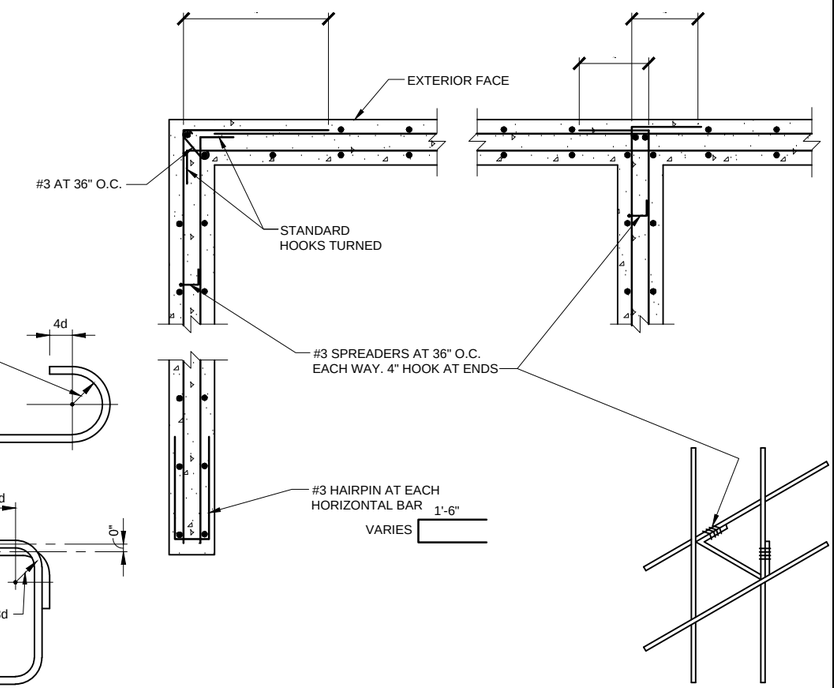

TYPICAL CORNER REINFORCING IN CONCRETE - 2 LAYERS

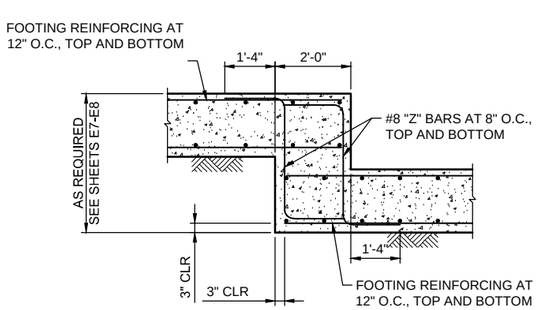

TYPICAL WALL FOUNDATION STEP

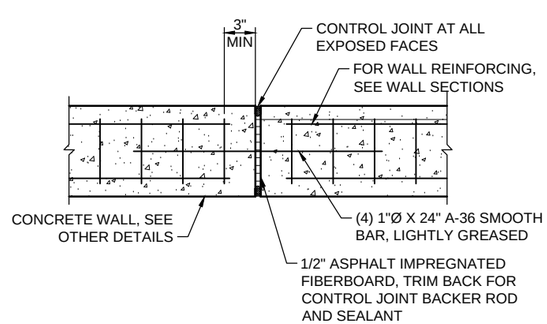

TYPICAL CONTROL JOINT

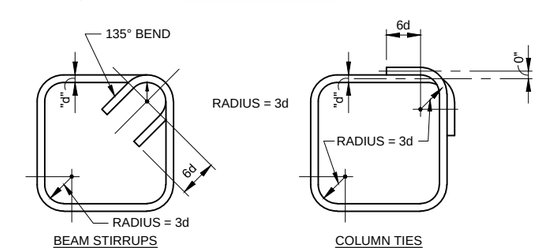

TYPICAL REBAR DETAILS 2

STATE OF ALASKA 49TH 95% 9/12/18 REGISTERED PROFESSIONAL ENGINEER

BY	DATE	REVISION

Stantec

PLANS DEVELOPED BY:
STANTEC CONSULTING SERVICES INC.
351 W. Parks Hwy., Suite 200
Wasilla, Alaska 99654
Phone: (907) 376-7815
C.A. #126386

MARBLE WY AT COTTONWOOD CR. FISH PASSAGE
MATANUSKA-SUSITNA BOROUGH
HEADWALL DETAILS

DATE: 11/26/2018
SHEET: E8 OF E8
PROJECT NUMBER: 18-14-1793

Date Revised: 11/26/2018, 1:51 PM
Layout Name: Headwall Details2
File Path and Name: U:\204706540O\drawing\C\sheets\18-14-1793 Marble Way at Cottonwood Creek Fish Passage Headwall Details2.dwg
Designed By:
Drawn By:
Checked By:

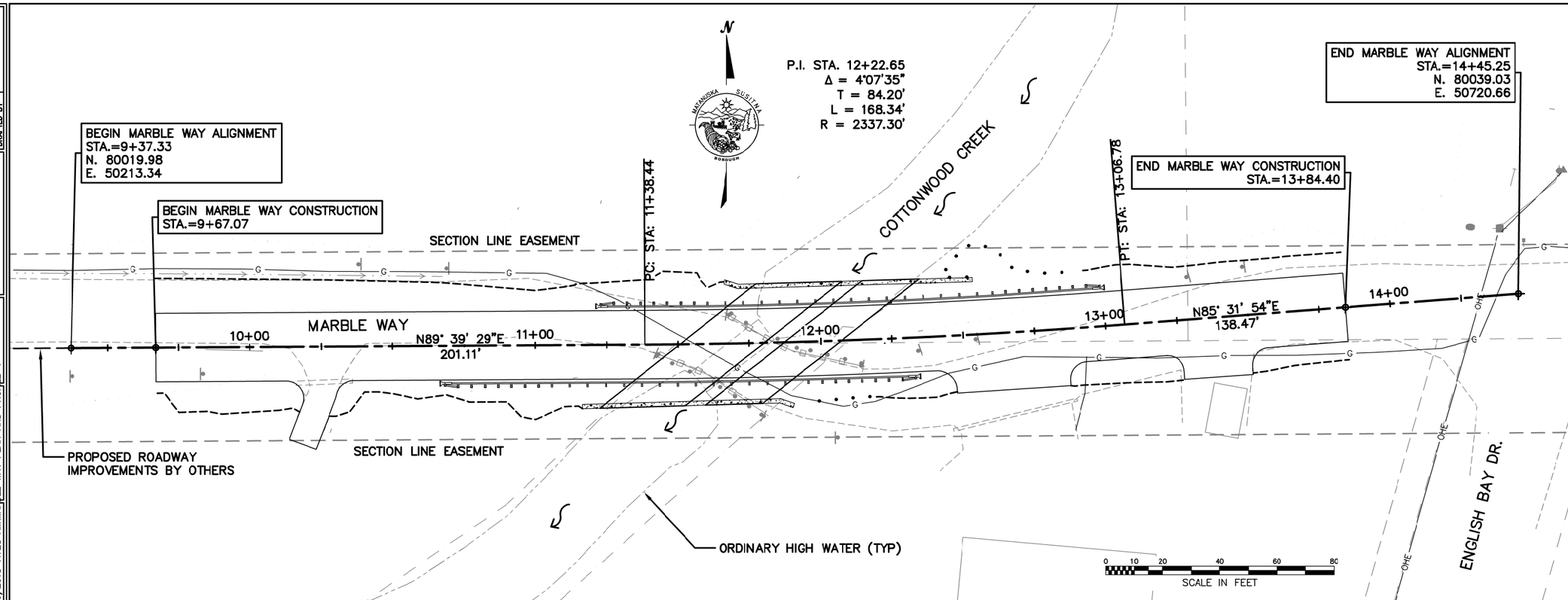

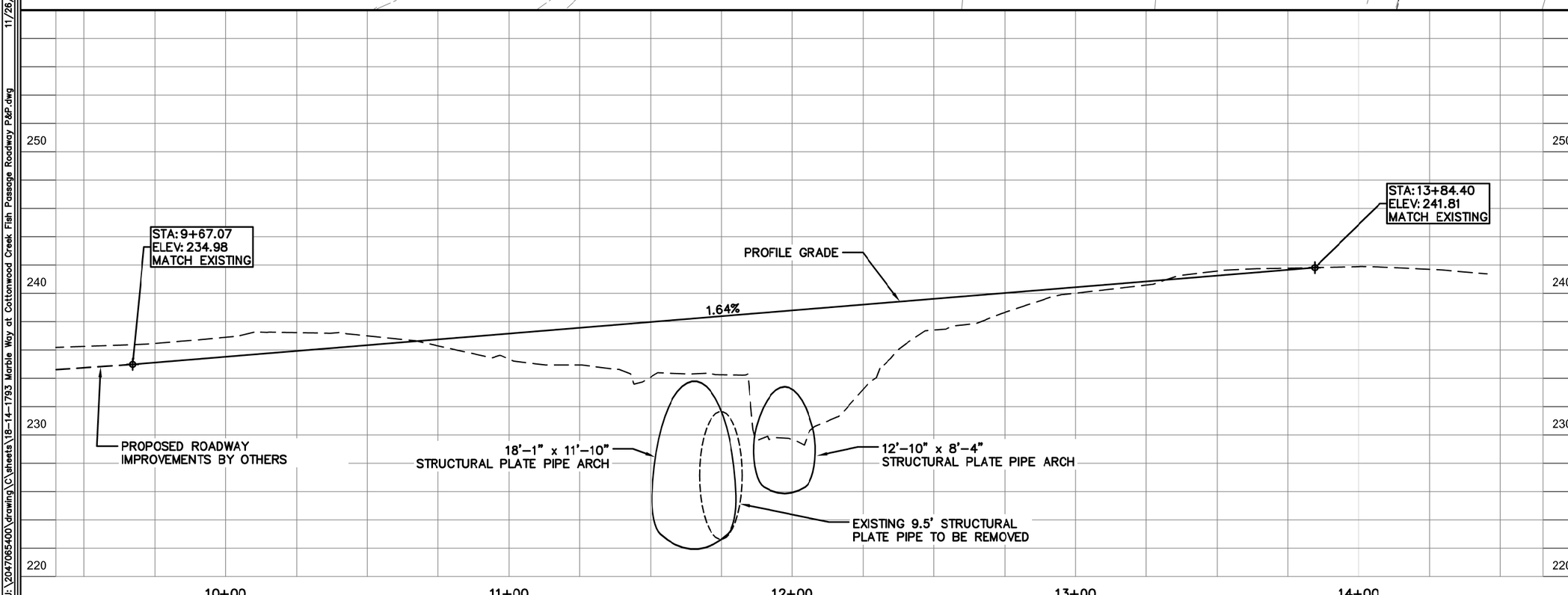

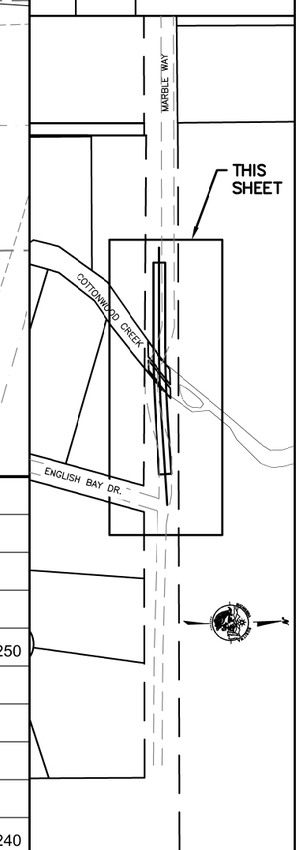

SHEET NO.	TOTAL SHEETS
F1	F3
STATE	DATE
ALASKA	12/3/2018

PROJECT DESIGNATION
18-14-1793

REVISIONS

NO.	DATE	DESCRIPTION

STATE OF ALASKA 49TH 95% 12/3/18 EVAN J. AARON No. CE 9203 12/3/2018 REGISTERED PROFESSIONAL ENGINEER

Stantec

PLANS DEVELOPED BY:
STANTEC CONSULTING SERVICES INC.
351 W. Parks Hwy., Suite 200
Wasilla, Alaska 99654
Phone: (907) 376-7815
C.A. #126386

MATANUSKA-SUSITNA BOROUGH
DEPARTMENT OF PUBLIC WORKS
OPERATIONS AND MAINTENANCE DIVISION

MARBLE WAY AT COTTONWOOD CREEK FISH PASSAGE

MARBLE WAY
PLAN & PROFILE

DESIGNED BY
CHECKED BY
DRAFTED BY
XREFS
SCALE
LAYOUT: MARBLE WAY PLAN AND PROFILE-1
DATE TIME: 11/28/2018 11:28 AM
DRAWING LOCATION: U:\2047065400\drawing\C\sheets\18-14-1793 Marble Way at Cottonwood Creek Fish Passage Roadway P&P.dwg

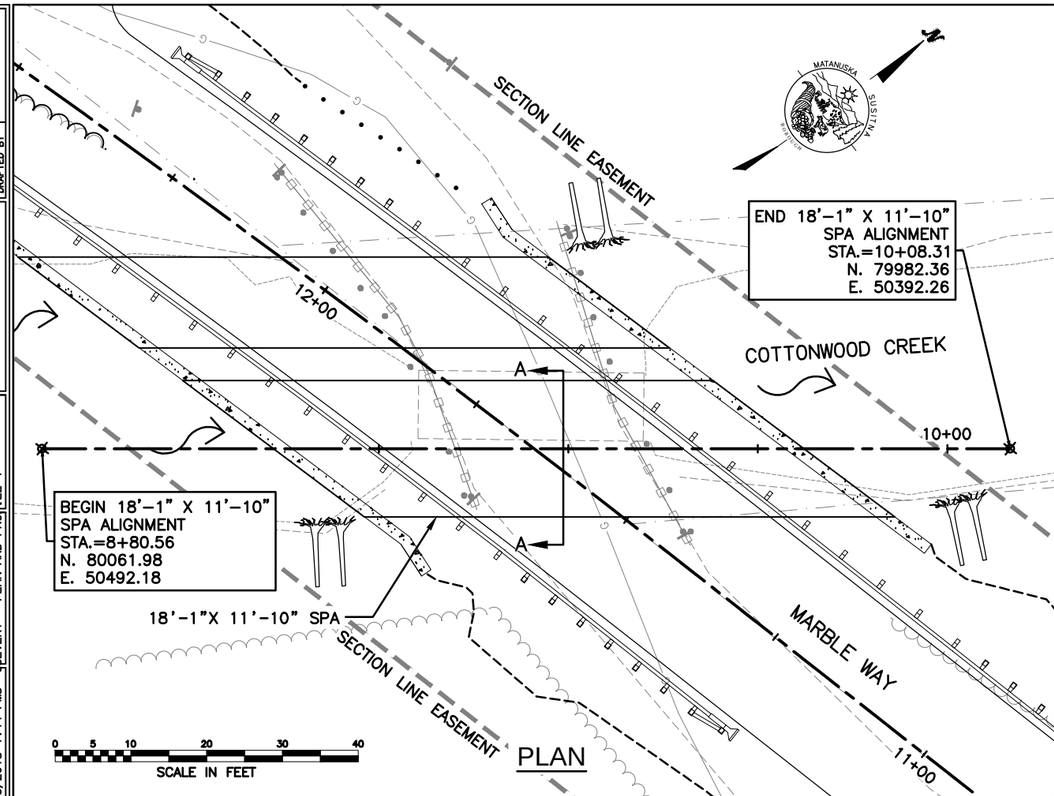

PLAN

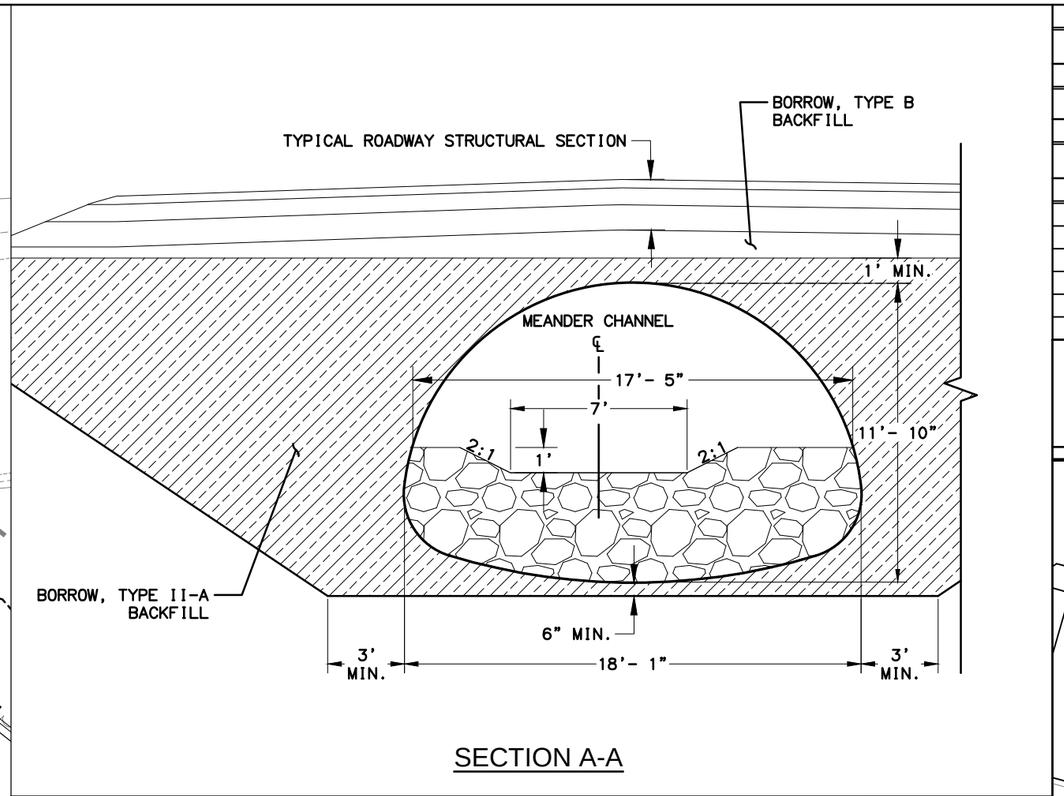

SECTION A-A

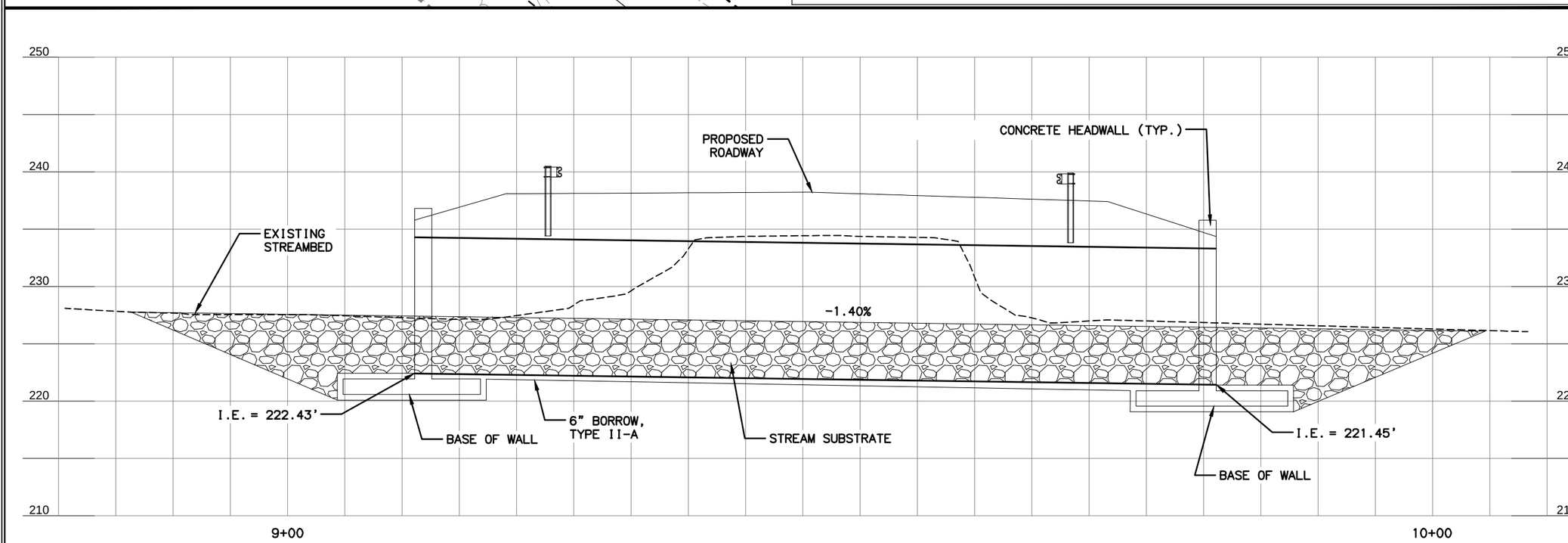

18'-1' x 11'-10" SPA CULVERT PROFILE

SHEET NO.	TOTAL SHEETS
F2	F3
STATE	DATE
ALASKA	11/26/2018
PROJECT DESIGNATION	
18-14-1793	

REVISIONS

NO.	DATE	DESCRIPTION

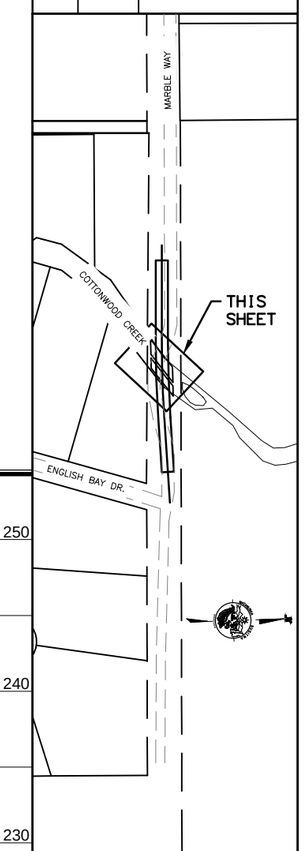

STATE OF ALASKA 49TH 95% 11/26/18 NO. CE 8203 11/26/2018 REGISTERED PROFESSIONAL ENGINEER

Stantec

PLANS DEVELOPED BY:
STANTEC CONSULTING SERVICES INC.
351 W. Parks Hwy., Suite 200
Wasilla, Alaska 99654
Phone: (907) 376-7815
C.A. #126386

MATANUSKA-SUSITNA BOROUGH
DEPARTMENT OF PUBLIC WORKS
OPERATIONS AND MAINTENANCE DIVISION

MARBLE WAY AT COTTONWOOD CREEK FISH PASSAGE

MARBLE WAY CULVERTS
PLAN & PROFILE

DESIGNED BY
CHECKED BY
DRAFTED BY
XREF'S
SCALE
LAYOUT
CULVERT - PLAN AND PROFILE-1
DATE TIME
11/26/2018 1:44 PM
DRAWING LOCATION
u:\204706540 0\drawing\C\sheets\18-14-1793 Marble Way at Cottonwood Creek Fish Passage Stream P&P.dwg

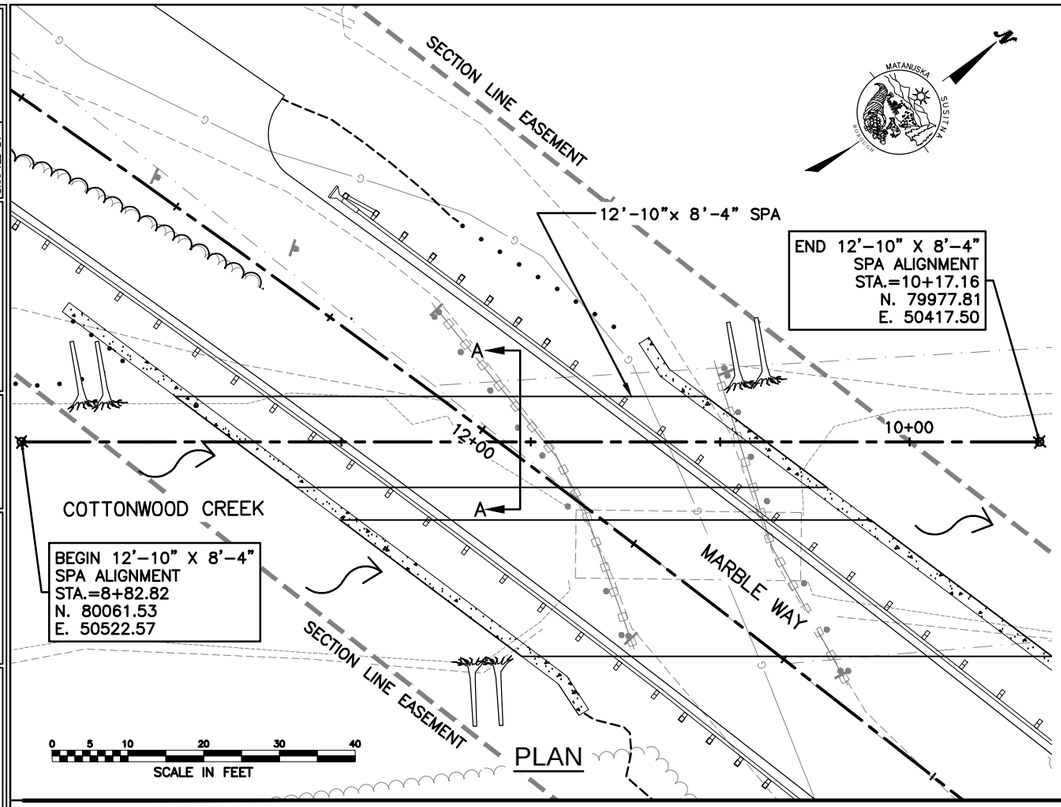

PLAN

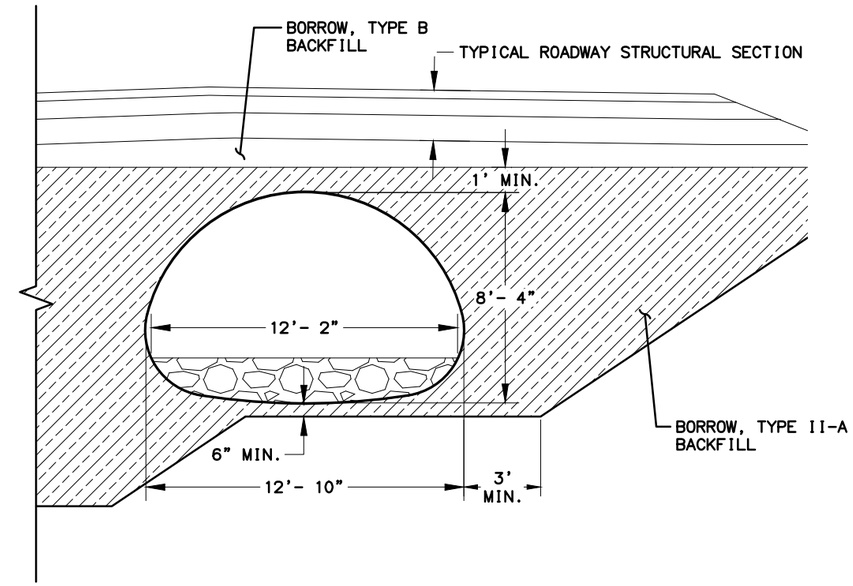

SECTION A-A

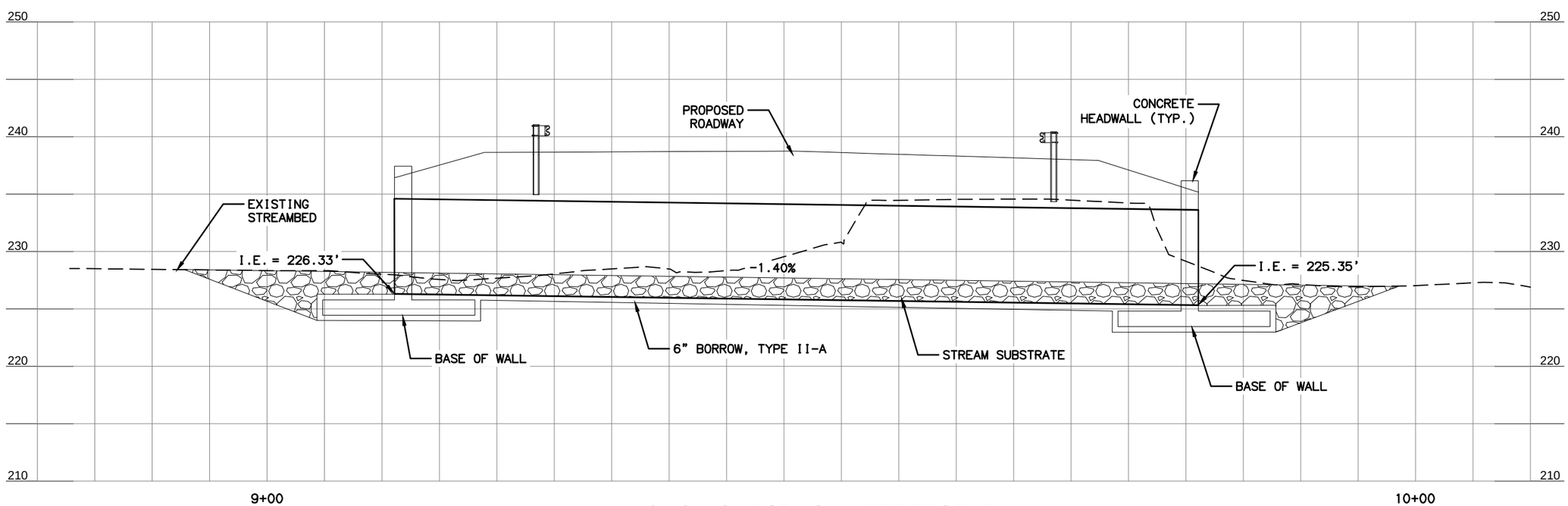

12'-10" x 8'-4" SPA CULVERT PROFILE

SHEET NO.	TOTAL SHEETS
F3	F3
STATE	DATE
ALASKA	11/26/2018

PROJECT DESIGNATION

18-14-1793

REVISIONS

NO.	DATE	DESCRIPTION

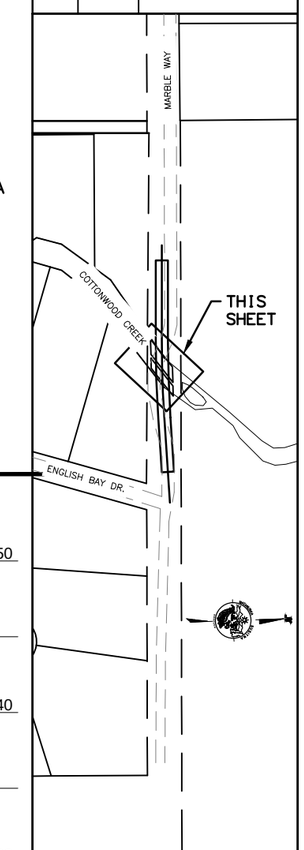

STATE OF ALASKA 49TH 95% 11/26/18 NO. CE 8203 11/26/2018 REGISTERED PROFESSIONAL ENGINEER

Stantec

PLANS DEVELOPED BY:
STANTEC CONSULTING SERVICES INC.
351 W. Parks Hwy., Suite 200
Wasilla, Alaska 99654
Phone: (907) 376-7815
C.A. #126386

MATANUSKA-SUSITNA BOROUGH
DEPARTMENT OF PUBLIC WORKS
OPERATIONS AND MAINTENANCE DIVISION

MARBLE WAY AT COTTONWOOD CREEK FISH PASSAGE

MARBLE WAY CULVERTS
PLAN & PROFILE

DESIGNED BY
CHECKED BY
DRAFTED BY
XREF'S
SCALE
LAYOUT
DATE TIME
11/26/2018 1:44 PM
12' CULVERT - PLAN AND PROFILE-2
DRAWING LOCATION
u:\204706540 0\drawing\C\sheets\18-14-1793 Marble Way at Cottonwood Creek Fish Passage Stream P&P.dwg

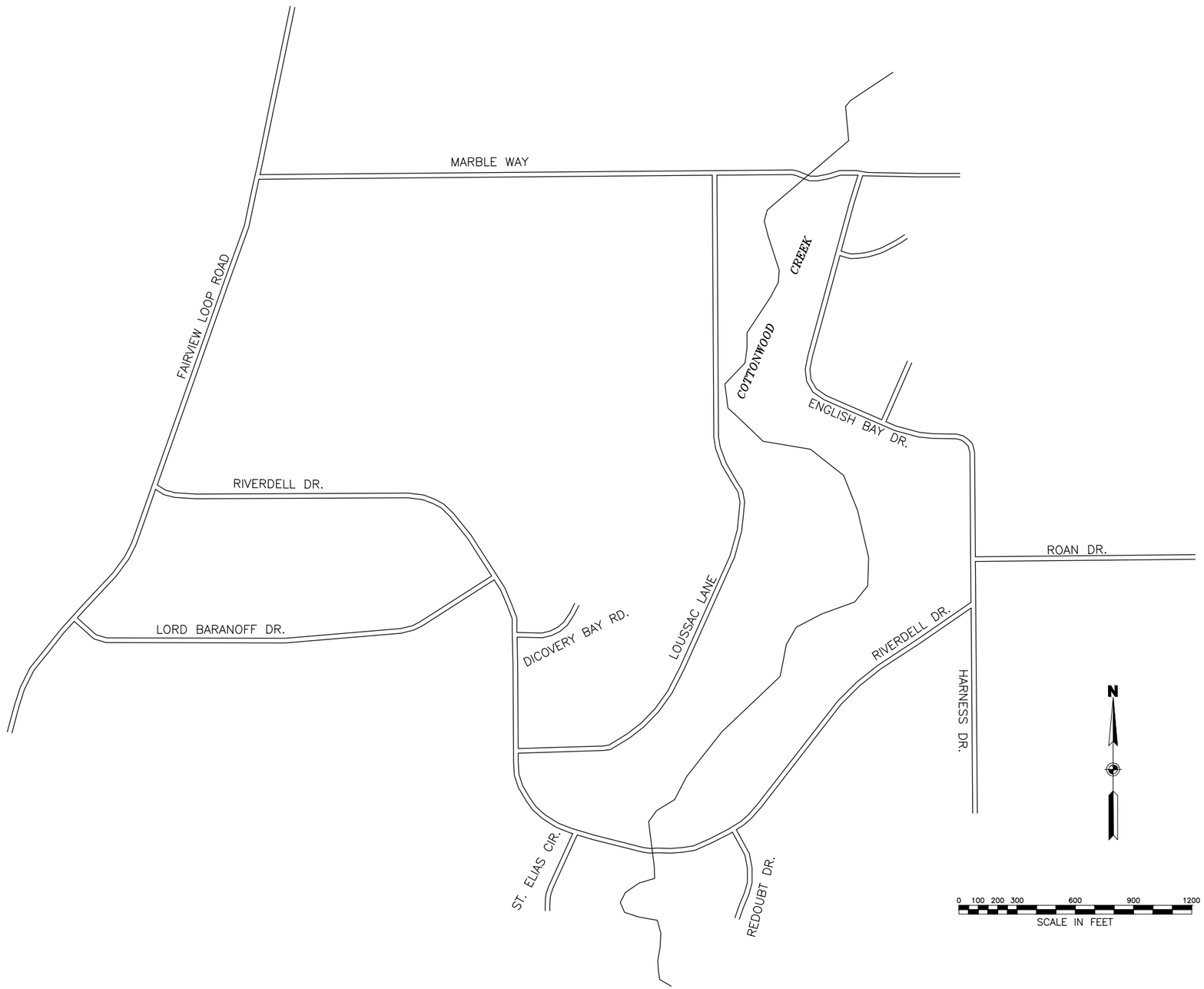

TRAFFIC CONTROL NOTES:

1. CONSTRUCTION SIGNING, FLAGGING, DETOURS AND GENERAL TRAFFIC CONTROL FEATURES SHALL CONFORM TO THE GUIDELINES SET FORTH IN THE "C" SERIES STANDARD DRAWINGS AND THE APPLICABLE PORTIONS OF SECTION 615 AND 643 OF THE SPECIFICATIONS, THE ALASKA TRAFFIC MANUAL AND THE MANUAL OF UNIFORM TRAFFIC CONTROL DEVICES.
2. A MINIMUM OF ONE LANE SHALL BE MAINTAINED AT ALL TIMES THROUGH ALL WORK AREAS.
3. TWO LANES SHALL BE MAINTAINED AT ALL TIMES IN NON–WORK AREAS, AND DURING NON–WORKING HOURS.
4. TEMPORARY DRIVING LANES SHALL HAVE A MINIMUM WIDTH OF 10'–0".
5. DRIVEWAYS MAY BE CLOSED DURING ACTUAL WORK ON A GIVEN DRIVEWAY, PROVIDED THAT THE CLOSURE DOES NOT EXCEED 8 HOURS AND THE AFFECTED RESIDENTS HAVE BEEN GIVEN 24 HOURS ADVANCE NOTICE OF THE CLOSURE.
6. MAXIMUM SPACING BETWEEN CHANNELIZING DEVICES SHALL BE EQUAL TO THE SPEED LIMIT IN FEET.
7. FLOOD LIGHTS SHALL BE PROVIDED FOR FLAGGER STATIONS DURING NIGHT OPERATIONS.
8. A SINGLE FLAGGER MAY BE APPROVED BY THE ENGINEER IF THE ENTIRE WORK AREA IS VISIBLE FROM THE FLAGGER STATION.
9. CONSTRUCTION SIGNING SHALL BE IN PLACE ONLY WHEN THE CONDITIONS EXIST FOR WHICH THE SIGNS ARE INTENDED.
10. TYPE "C" STEADY BURN WARNING LIGHTS SHALL BE USED TO MARK CHANNELIZING DEVICES AT NIGHT.
11. CHANNELIZING DEVICES ARE TO BE EXTENDED TO A POINT WHERE THEY ARE VISIBLE TO APPROACHING TRAFFIC.
12. TRAFFIC MAINTENANCE WILL INCLUDE ADVANCED WARNING SIGNS ON FAIRVIEW LOOP RD., AND LANE CLOSURE AND ROADWAY ENCROACHMENT WARNING SIGNS AND CHANNELIZING DEVICES AS REQUIRED FOR THE WORK BEING PERFORMED.

STATE OF ALASKA
49TH
95%
11/26/18
No. CE 9203
11/26/2018
REGISTERED PROFESSIONAL ENGINEER

BY	DATE	REVISION

Stantec
PLANS DEVELOPED BY:
STANTEC CONSULTING SERVICES INC.
351 W. Parks Hwy., Suite 200
Wasilla, Alaska 99654
Phone: (907) 376-7815
C.A. #126386

MARBLE WY AT COTTONWOOD CR. FISH PASSAGE
MATANUSKA-SUSITNA BOROUGH
PERMANENT TRAFFIC CONTROL

DATE: 11/26/2018
SHEET: J1 OF
PROJECT NUMBER: 18–14–1793

Designed By:	
Drawn By:	
Checked By:	
Date Revised:	11/26/2018, 1:53 PM
Layout Name:	Traffic Control
File Path and Name:	U:\2047065400\drawing\C\sheets\18-14-1793 Marble Way at Cottonwood Creek Fish Passage Traffic Control.dwg

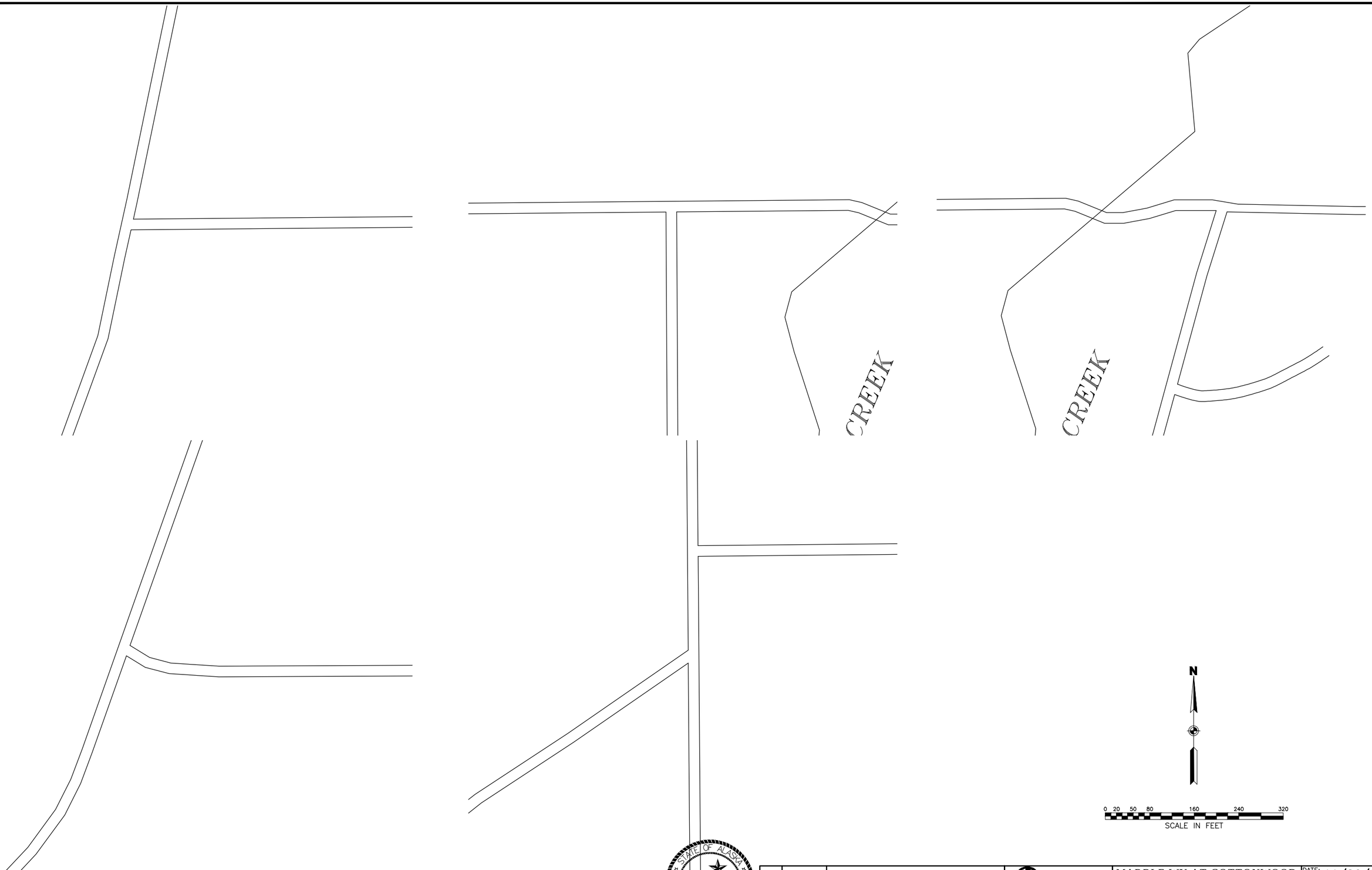

STATE OF ALASKA
49TH
95%
11/26/18
No. CE 12203
11/26/2018
REGISTERED PROFESSIONAL ENGINEER

BY	DATE	REVISION

Stantec

PLANS DEVELOPED BY:
STANTEC CONSULTING SERVICES INC.
351 W. Parks Hwy., Suite 200
Wasilla, Alaska 99654
Phone: (907) 376-7815
C.A. #126386

MARBLE WY AT COTTONWOOD
CR. FISH PASSAGE
MATANUSKA-SUSITNA BOROUGH
PERMANENT TRAFFIC CONTROL

DATE: 11/26/2018
SHEET: J2 OF
PROJECT NUMBER: 18-14-1793

Designed By:	
Drawn By:	
Checked By:	
Date Revised:	11/26/2018, 1:53 PM
Layout Name:	Traffic Control (2)
File Path and Name:	U:\204706540O\drawing\C\sheets\18-14-1793 Marble Way at Cottonwood Creek Fish Passage Traffic Control.dwg

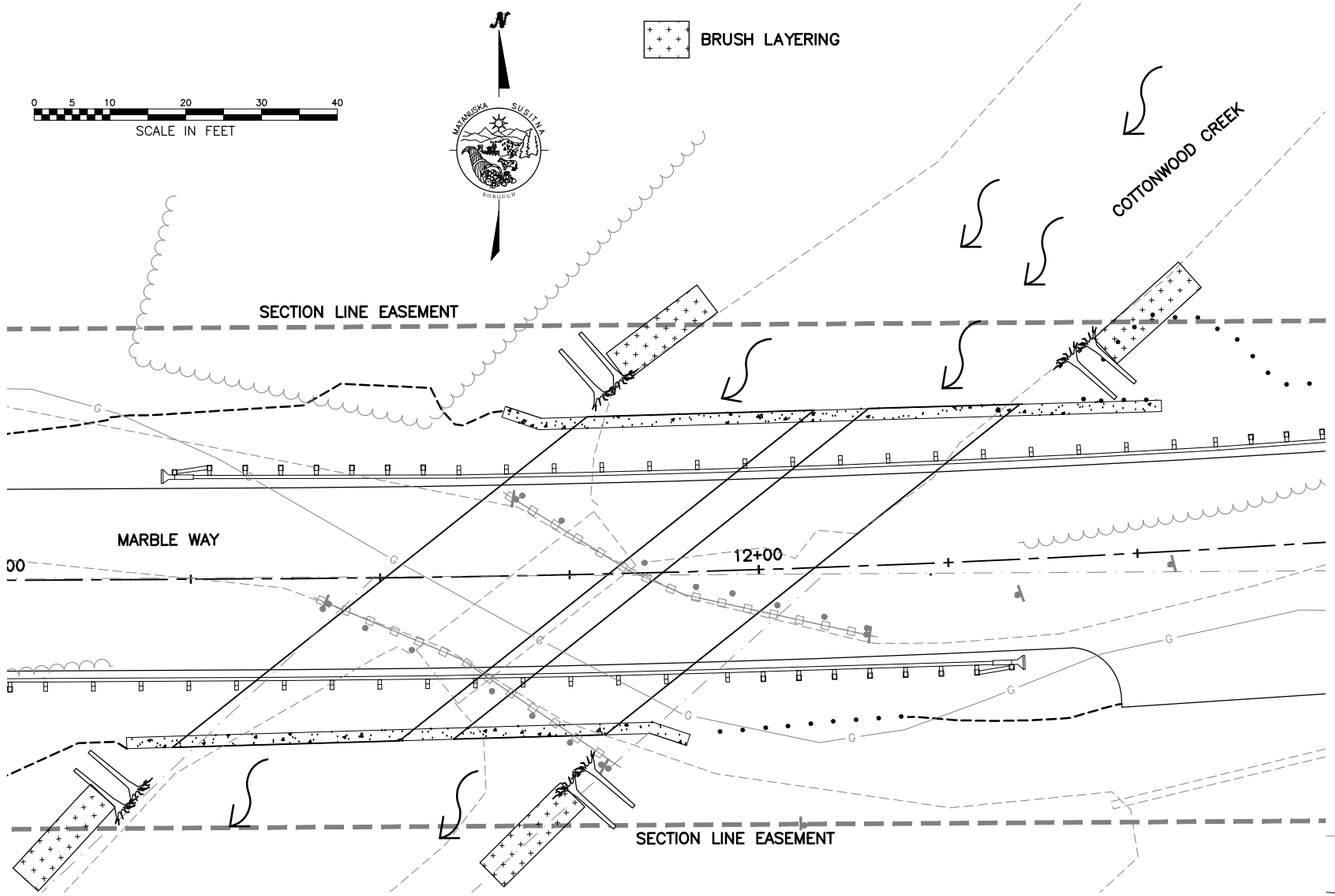

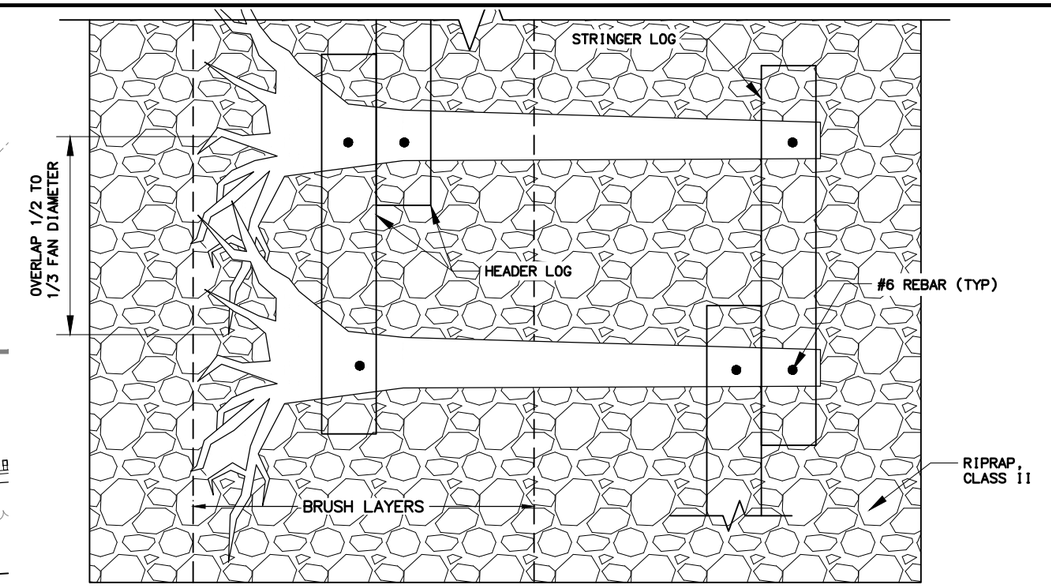

ROOTWAD LAYERING PLAN

NOT TO SCALE

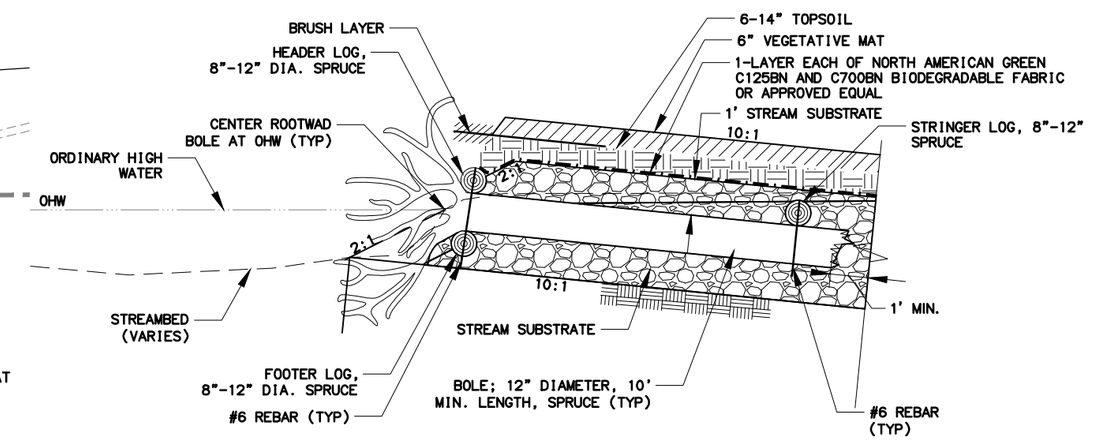

ROOTWAD LAYERING - SECTION VIEW

NOT TO SCALE

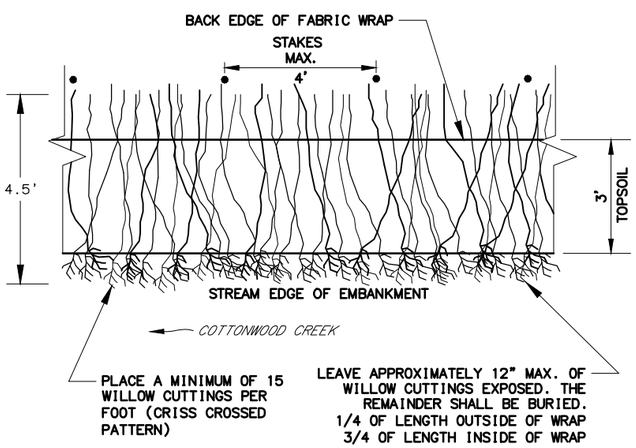

BRUSH LAYERING PLAN

NOT TO SCALE

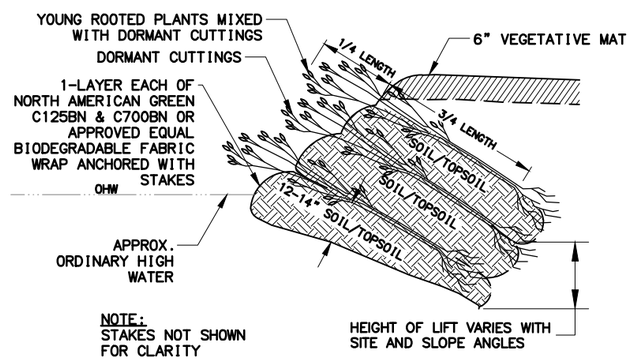

BRUSH LAYERING - SECTION VIEW

NOT TO SCALE

ROOTWAD LAYERING NOTES:

1. ADDITIONAL BRUSH LAYERS AND TOPSOIL MAY BE USED IN ORDER TO MATCH EXISTING BANK HEIGHT, AS DIRECTED BY THE ENGINEER.

BRUSH LAYERING NOTES:

1. FIRST LAYER OF CUTTINGS (NEAREST TO WATER) MUST BE 100 PERCENT FELTLEAF WILLOW.
2. DO NOT DAMAGE BUDS, STRIP BARK, OR SPLIT THE CUTTINGS DURING THE INSTALLATION. DAMAGED CUTTINGS SHALL BE REPLACED IMMEDIATELY. CUT ENDS BEFORE PLANTING.
3. TO REMOVE AIR POCKETS, WATER THE SOIL CUTTINGS WHEN PLANTING. TAMP SOIL AROUND CUTTING TO ASSURE COMPLETE CONTACT BETWEEN CUTTINGS AND TOPSOIL.
4. AS NECESSARY, TAPER THE ENDS OF THE BIO BANK TO MATCH EXISTING STREAM BANKS.
5. SEE SECTION 690 OF THE SPECIAL PROVISIONS FOR CONSTRUCTION REQUIREMENTS.
6. FABRIC WRAP SHALL BE FOLDED UNDER 3' MINIMUM.
7. STAKES SHALL BE A MINIMUM OF 1.5"X1.5"X 30".

STATE OF ALASKA 49TH 95% 11/26/18 No. CE 9205 11/26/2018 REGISTERED PROFESSIONAL ENGINEER

BY	DATE	REVISION

Stantec
PLANS DEVELOPED BY:
STANTEC CONSULTING SERVICES INC.
351 W. Parks Hwy., Suite 200
Wasilla, Alaska 99654
Phone: (907) 376-7815
C.A. #126386

MARBLE WY AT COTTONWOOD CR. FISH PASSAGE
MATANUSKA-SUSITNA BOROUGH
LANDSCAPING AND RESTORATION

DATE: 11/26/2018
SHEET: L1 OF L1
PROJECT NUMBER: 18-14-1793

Designed By:
Drawn By:
Checked By:
Date Revised: 11/26/2018, 1:54 PM
Layout Name: Landscaping and Restoration
File Path and Name: U:\204706540\drawing\C\sheets\18-14-1793 Marble Way at Cottonwood Creek Fish Passage Landscaping and Restoration.dwg

ESCP NOTES:

1. THE CONTRACTOR SHALL DEVELOP A STORM WATER POLLUTION PREVENTION PLAN (SWPPP) FOR THIS PROJECT. THE PLAN SHALL COMPLY WITH THE ALASKA POLLUTANT DISCHARGE ELIMINATION SYSTEM (APDES) REQUIREMENTS FOR STORM WATER DISCHARGE FROM CONSTRUCTION SITES. SEE SECTION 641 OF THE SPECIAL PROVISIONS. THE ALASKA SWPPP GUIDE (AS CURRENTLY AMENDED), AND ALL CONDITIONS OF PERMIT APPROVALS.
2. MINIMIZE THE AREA AND TIME PERIOD ERODIBLE SOILS ARE EXPOSED TO STORM WATER. PHASE CLEARING OPERATIONS TO TAKE ADVANTAGE OF THE EXISTING COVER ONSITE BEFORE CONSTRUCTION TO PROVIDE TEMPORARY COVER FOR DISTURBED AREAS NOT CURRENTLY BEING WORKED. DISTURBED AREAS SHALL BE STABILIZED AS SOON AS PRACTICABLE.
3. SEDIMENT CONTROL DEVICES SHALL BE INSTALLED BEFORE ERODIBLE SOILS ARE EXPOSED AND MAY HAVE TO BE REMOVED AND REINSTALLED DAILY TO ALLOW CONSTRUCTION ACTIVITIES TO PROCEED. ALL DEVICES SHALL BE MAINTAINED ON A DAILY BASIS INCLUDING, BUT NOT LIMITED TO, REMOVAL AND DISPOSAL OF ACCUMULATED SOILS, CLEANING DEVICES AND REPLACEMENT OF DAMAGED DEVICES WITH NEW DEVICES.
4. THE CONTRACTOR SHALL MAINTAIN DEVICES AND CORRECT ANY PROBLEMS OCCURRING DUE TO INADEQUATE PROTECTION MEASURES. INSPECT AND REPAIR DEVICES AFTER EACH RAINFALL. REMOVE AND DISPOSE OF SEDIMENT CONTROL DEVICES AFTER STABILIZATION OF SLOPES. SEE THE ALASKA DOT&PF BMP GUIDE FOR EROSION AND SEDIMENT CONTROL, BMP 18.00 AND BMP 20.00.
5. WATER, OR NON-TOXIC DUST PALLIATIVES SHALL BE USED TO CONTROL DUST.
6. PROVIDE EROSION CONTROL MATTING OR OTHER BMP ON ALL SLOPES WHERE IMMEDIATE SEEDING IS NOT PRACTICAL.
7. STREET CLEANING SHALL OCCUR DAILY OR MORE FREQUENTLY TO CONTROL OFF SITE TRACKING. STREET CLEANING SHALL CONSIST OF DRY SWEEPING OR HIGH EFFICIENCY VACUUM SWEEPING FOLLOWED BY WASHING. DO NOT WASH SEDIMENTS FROM ROADWAY INTO DRAINAGE SYSTEM OR WATER BODIES.
8. FOR THE PURPOSE OF THE SWPPP PREPARTION, THE ESTIMATED AREA OF DISTURBANCE IS 0.6 ACRES. THIS INCLUDES THE EXISTING ROADWAY.

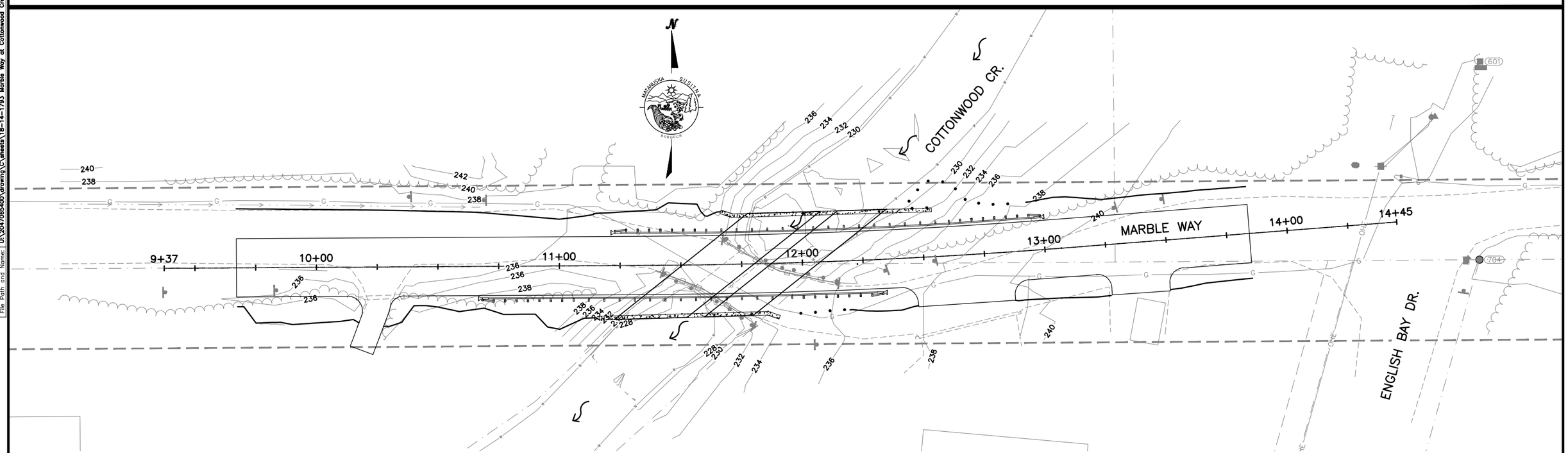

0 10 20 40 60 80
SCALE IN FEET

ESCP LEGEND:	
	DRAINAGE PATTERN

NOTE:
THE INTENT OF THESE PLANS IS TO SHOW EXISTING DRAINAGE PATTERNS AND PRELIMINARY SEDIMENT CONTROL FEATURES.

BY	DATE	REVISION

Stantec
PLANS DEVELOPED BY:
STANTEC CONSULTING SERVICES INC.
351 W. Parks Hwy., Suite 200
Wasilla, Alaska 99654
Phone: (907) 376-7815
C.A. #126386

MARBLE WY AT COTTONWOOD CR. FISH PASSAGE
MATANUSKA-SUSITNA BOROUGH

DRAFT ESCP

DATE: 11/26/2018
SHEET: Q1 OF Q1
PROJECT NUMBER: 18-14-1793

Designed By:
Drawn By:
Checked By:

Date Revised: 11/26/2018, 1:54 PM
Layout Name: DRAFT ESCP
File Path and Name: U:\204706540O\drawing\C\sheets\18-14-1793 Marble Way at Cottonwood Creek Fish Passage ESCP Plan.dwg

ALASKA DEPARTMENT OF NATURAL RESOURCES
Division of Mining, Land, and Water
Water Resources Section
550 West 7th Avenue, Suite 1020, Anchorage, AK 99501-3562

TEMPORARY WATER USE AUTHORIZATION
TWUA A2018-150

Pursuant to AS 46.15, as amended and the rules and regulations promulgated thereunder, permission is hereby granted to the Matanuska Susitna Borough (authorization holder), 350 E. Dahlia Avenue, Palmer, Alaska 99645, and its contractors, **to divert the entire stream flow** from the below described source of water. Water use is associated with stream diversion during culvert upgrades on W. Marble Way in the Mat-Su Borough. The season of use for this authorization is May 1-September 30 of each authorized year, with additional date restrictions noted in Condition 20.

SOURCE OF WATER:

Cottonwood Creek as it crosses the Section 19/30 section line, Township 17 North, Range 1 West, Seward Meridian.

STRUCTURES TO BE CONSTRUCTED AND USED:

As described in the application materials for TWUA A2018-150 and ADF&G Fish Habitat Permit FH18-IV-0363 (issued on January 15, 2019): The construction site will be isolated with supersacks or similar type and Cottonwood Creek will be routed through a temporary stream diversion consisting of a polyethylene plastic lined excavated inlet channel, a 52'x6' corrugated metal pipe and polyethylene plastic lined excavated outlet channel. Silt fencing or other suitable containment techniques will be used to minimize the introduction of suspended solids into flowing waters. The current culvert will be removed and a 70'x18'1"x11'10" structural plate pipe arch and a 70'x12'10"x8'4" structural plate pipe arch for overflow will be installed. Riprap, cobbles, gravel, and sand will also be placed within the new pipes. Additional instream rehabilitation and bank work will occur ~15' upstream and downstream of the new culverts following installation. This will consist of grading the bank to a 2: 1 slope, placement of 10' of cabled spruce trees and 15' of brush layering.

Changes in the natural state of water are to be made as stated herein and for the purposes indicated.

The authorization holder shall comply with the following conditions:

CONDITIONS:

1. This authorization does not authorize the authorization holder to enter upon any lands until proper rights-of-way, easements or permission documents from the appropriate landowner have been obtained.

2. Follow acceptable engineering standards in exercising the privilege granted herein.

3. Comply with all applicable laws, and any rules and/or regulations issued thereunder.

4. Except for claims or losses arising from negligence of the State, defend and indemnify the State, the State's agents and the State's employees against and hold each of them harmless from any and all claims, demands, suits, loss, liability and expense, including attorney fees, for injury to or death of persons and damages to or loss of property arising out of or connected with the exercise of the privileges covered by this authorization.

5. Notify the Water Resources Section upon change of address.

6. The authorization holder is responsible for obtaining and complying with other permits/approvals (state, federal, or local) that may be required prior to beginning activities pursuant to this authorization including, but not limited to, fish habitat permits from the Alaska Department of Fish and Game (ADF&G), Habitat Division and any adjacent landowner or agency.

7. The authorization holder shall allow an authorized representative of the Water Resources Section to inspect at reasonable times any facilities, equipment, practices or operators regulated or required under this authorization.

8. Failure to respond to a request for additional information during the term of the authorization may result in the termination of this authorization.

9. This authorization, or a copy thereof, shall be kept at the site of the authorized project described herein. The authorization holder is responsible for the actions of contractors, agents or other persons who perform work to accomplish the approved project and shall ensure that workers are familiar with the requirements and conditions of this authorization. For any activity that significantly deviates from the approved project during its siting, construction or operation, the authorization holder is required to contact the Water Resources Section and obtain approval before beginning the activity.

10. The Water Resources Section may modify this authorization to include different limitations, expand monitoring requirements, evaluate impacts or require restoration at the site.

11. Any false statements or representations in any application, record, report, plan or other document filed or required to be maintained under this authorization may result in the termination of this authorization.

12. Pursuant to 11 AAC 93.220(f), this authorization may be suspended or terminated by the Department of Natural Resources to protect the water rights of other persons or the public interest.

13. Operations shall not cause or contribute to the spread of preexisting or authorization holder caused contaminate plumes. Operations shall be conducted in such a way as to prevent any petroleum products or other hazardous substances from contaminating surface or ground water. Pumps and equipment will not be fueled or serviced within 100 feet of a pond, lake, stream or river unless they are situated within a catch basin designed to contain any spills. Vehicles will not be fueled or serviced within 100 feet of a pond, lake, stream or river. In case of accidental spills, absorbent pads and spill response kits shall be readily available. Appropriate disposal methods for waste products shall be followed. All spills must be reported to the Alaska Department of Environmental Conservation (ADEC) and the Alaska Department of Natural Resources. Authorization holder shall cooperate with lawful prohibitions, restrictions, instructions or work plan requirements issued by ADEC for authorization holder's projects.

14. All equipment used at or adjacent to water bodies must be clean and free from contamination and invasive species (terrestrial and aquatic) at all times to prevent the introduction of contamination and invasive species to the water body.

15. Except as described in the application materials: if banks, shores or beds are inadvertently disturbed, excavated, compacted or filled by activities attributable to this project, they shall be immediately stabilized to prevent erosion and resultant sedimentation of water body which could occur both during and after operations. The Water Resources Section is to be notified immediately if the above occurs. Additional corrective action may be required by ADNR and the land manager/owner.

16. Water discharge (including runoff) and diversion shall not be discharged at a rate or location resulting in sedimentation, erosion or other disruptions to the bed or banks of water bodies, causing water quality degradation.

17. The diversion channel must be capable of carrying anticipated stream flows during the construction period.

18. Any structure in fish bearing waters (including a screened enclosure, diversion, culvert, well-point, sump or infiltration gallery) must be designed, operated and maintained to prevent fish entrapment, entrainment or injury, unless specifically exempted by the Alaska Department of Fish and Game, Habitat Division.

19. Except as described in the application materials, there shall be no wheeled, tracked, excavating, or other machinery or equipment operated below the ordinary high water line to facilitate water withdrawal or diversion pursuant to this authorization. No other in-water activities will occur. Issuance of this authorization does not give the authorization holder the right to block or dam a water course.

20. The installation of the diversion shall be conducted between May 1 and July 15, unless a different date range is specifically approved by the Alaska Department of Fish and Game, Habitat Division.

21. Record and immediately report to this office all complaints relating to pumping activities and surface discharge, including requests for information from residents, should the situation occur.

22. Deviations from the project description submitted with the application which affect water amounts, season of use, capacity, flow, operation or point of discharge/diversion must be approved by the Water Resources Section in writing prior to implementation.

23. The placement of equipment and diversion structures shall not unnecessarily hinder public access.

24. Per 11 AAC 05.260(e), an annual administrative service fee shall be assessed on this authorization.

This Temporary Water Use Authorization is issued pursuant to 11 AAC 93.220. No water right or priority is established by a temporary water use authorization issued pursuant to 11 AAC 93.220. Water so used is subject to appropriation by others (11 AAC 93.210 (b)).

Pursuant to 11 AAC 93.210 (b), authorized temporary water use is subject to amendment, modification or revocation by the Department of Natural Resources if the Department of Natural Resources determines that amendment, modification or revocation is necessary to supply water to lawful appropriators of record or to protect the public interest.

This authorization shall expire on September 30, 2021.

Date issued: February 13, 2019

Approved: Heng C Brook

Manager, South Central Region, Water Resources Section
ADNR/DMLW

CERTIFICATION REGARDING LOBBYING

Certification for Contracts, Grants, Loans, and Cooperative Agreements

The undersigned certifies, to the best of his or her knowledge and belief, that:

1. No Federal appropriated funds have been paid or will be paid, by or on behalf of the undersigned, to any person for influencing or attempting to influence an officer or employee of an agency, a Member of Congress, an officer or employee of Congress, or an employee of a Member of Congress in connection with the awarding of any Federal contract, the making of any Federal grant, the making of any Federal loan, the entering into of any cooperative agreement, and the extension, continuation, renewal, amendment, or modification of any Federal contract, grant, loan, or cooperative agreement.

2. If any funds other than Federal appropriated funds have been paid or will be paid to any person for influencing or attempting to influence an officer or employee of any agency, a Member of Congress, an officer or employee of Congress, or an employee of a Member of Congress in connection with this Federal contract, grant, loan, or cooperative agreement, the undersigned shall complete and submit Standard Form-LLL, "Disclosure of Lobbying Activities," in accordance with its instructions.

3. The undersigned shall require that the language of this certification be included in the award documents for all subawards at all tiers (including subcontracts, sub-grants, and contracts under grants, loans, and cooperative agreements) and that all sub-recipients shall certify and disclose accordingly. This certification is a material representation of fact upon which reliance was placed when this transaction was made or entered into. Submission of this certification is a prerequisite for making or entering into this transaction imposed by section 1352, title 31, U.S. Code. Any person who fails to file the required certification shall be subject to a civil penalty of not less than $10,000 and not more than $100,000 for each such failure.

Statement for Loan Guarantees and Loan Insurance

The undersigned states, to the best of his or her knowledge and belief, that:

If any funds have been paid or will be paid to any person for influencing or attempting to influence an officer or employee of any agency, a Member of Congress, an officer or employee of Congress, or an employee of a Member of Congress in connection with this commitment providing for the United States to insure or guarantee a loan, the undersigned shall complete and submit Standard Form-LLL, "Disclosure of Lobbying Activities," in accordance with its instructions. Submission of this statement is a prerequisite for making or entering into this transaction imposed by section 1352, title 31, U.S. Code. Any person who fails to file the required statement shall be subject to a civil penalty of not less than $10,000 and not more than $100,000 for each such failure.

APPLICANT'S ORGANIZATION*

* PRINTED NAME AND TITLE OF AUTHORIZED REPRESENTATIVE

Prefix: * First Name: Middle Name:

* Last Name: Suffix:

* Title:

* SIGNATURE: * DATE:

Certification Regarding
Debarment, Suspension, Ineligibility and Voluntary Exclusion
Lower Tier Covered Transactions

This certification is required by the regulations implementing Executive Order 12549, Debarment and Suspension, 13 CFR Part 145. The regulations were published as Part VII of the May 26, 1988 *Federal Register* (pages 19160-19211). Copies of the regulations may be obtained by contacting the person to which this proposal is submitted.

(BEFORE COMPLETING CERTIFICATION, READ INSTRUCTIONS ON REVERSE)

(1) The prospective lower tier participant certifies, by submission of this proposal, that neither it nor its principals are presently debarred, suspended, proposed for disbarment, declared ineligible, or voluntarily excluded from participation in this transaction by any Federal department or agency.

(2) Where the prospective lower tier participant is unable to certify to any of the statements in this certification, such prospective participant shall attach an explanation to this proposal.

Business Name _____

Date _____

By _____
Name and Title of Authorized Representative

_____
Signature of Authorized Representative

Federal Recycling Program Printed on Recycled Paper

INSTRUCTIONS FOR CERTIFICATION

1. By signing and submitting this proposal, the prospective lower tier participant is providing the certification set out below.

2. The certification in this clause is a material representation of fact upon which reliance was placed when this transaction was entered into. If is later determined that the prospective lower tier participant knowingly rendered an erroneous certification, in addition to other remedies available to the Federal Government, the department or agency with which this transaction originated may pursue available remedies, including suspension and/or debarment.

3. The prospective lower tier participant shall provide immediate written notice to the person to which this proposal is submitted if at any time the prospective lower tier participant learns that its certification was erroneous when submitted or has become erroneous by reason of changed circumstances.

4. The terms "covered transaction," "debarred," "suspended," "ineligible," "lower tier covered transaction," "participant," "person," "primary covered transaction," "principal," "proposal," and "voluntarily excluded," as used in this clause, have the meanings set out in the Definitions and Coverage sections of the rules implementing Executive Order 12549. You may contact the person to which this proposal is submitted for assistance in obtaining a copy of those regulations (13CFR Part 145).

5. The prospective lower tier participant agrees by submitting this proposal that, should the proposed covered transaction be entered into, it shall not knowingly enter into any lower tier covered transaction with a person who is debarred, suspended, declared ineligible, or voluntarily excluded from participation in this covered transaction, unless authorized by the department or agency with which this transaction originated.

6. The prospective lower tier participant further agrees by submitting this proposal that it will include the clause titled "Certification Regarding Debarment, Suspension, Ineligibility and Voluntary Exclusion--Lower Tier Covered Transactions," without modification, in all lower tier covered transactions and in all solicitations for lower tier covered transactions.

7. A participant in a covered transaction may rely upon a certification of a prospective participant in a lower tier covered transaction that is not deas it knows that the certification is erroneous. A participant may decide the method and frequency by which it determines the ineligibility of its principals. Each participant may, but is not required to, check the Nonprocurement List.

8. Nothing contained in the foregoing shall be construed to require establishment of a system of records in order to render in good faith the certification required by this clause. The knowledge and information of a participant is not required to exceed that which is normally possessed by a prudent person in the ordinary course of business dealings.

9. Except for transactions authorized under paragraph 5 of these instructions, if a participant in a covered transaction knowingly enters into a lower tier covered transaction with a person who is suspended, debarred, ineligible, or voluntarily excluded from participation in this transaction, in addition to other remedies available to the Federal Government, the department or agency with which this transaction originated may pursue available remedies, including suspension and/or debarment.