Attachment "B"

3/12/04 MSB Copy

SHEETING SCHEDULE Tahoe Blue

	TYPE	COLOR	GA.
ROOF PANEL	Husky-Hi Rib	~~GALVANIZED~~	26
WALL PANEL	Husky-Hi Rib	Old Towne Green	26
LINER PANEL		None	
SOFFIT PANEL		None	
RAKE/EAVE TRIM		Tahoe Blue	26
WALL TRIM		Tahoe Blue	26
CORNER TRIM		Tahoe Blue	26
JAMB/HEAD TRIM		Tahoe Blue	26
GUTTER		None	26

SCREWS SCHEDULE

MARK	SIZE	LENGTH
FRAMING SCREW W/O WASHER	12-14	1"
ROOF FRAMING SCREW	12-14	2"
WALL FRAMING SCREW	12-14	2"
TRIM FRAMING SCREW	12-14	1"
STITCH SCREW	1/4"-14	7/8"
STRUCTURAL SCREW	12-24	1 1/4"
WAFER HEAD SCREWS	8-18	2 3/8"
WAFER HEAD SCREWS	10-24	1"

FRAMED OPENING SCHEDULE

QNTY.	DESCRIPTION
2	16'-0" X 16'-0" DOOR BY OTHERS
2	3'-4" X 7'-2" DOOR BY OTHERS F.O

MAN DOOR SCHEDULE

QNTY.	MARK	
1	3070M	SOLID

WINDOW SCHEDULE

QNTY.	DESCRIPTION

INSULATION

	THICKNESS	BY HCI	NOT BY HCI
ROOF	6" LOOP		XXX
WALL	6" VINYL		XXX
ROOF T-BLOCK			
WALL T-BLOCK			

SKYLIGHT/WALLITE PANELS SCHEDULE

PROFILE	QNTY.	LENGTH
HUSKY HI RIB		
WEATHER SPAN		

GENERAL NOTES:

1.) MATERIALS

	ASTM DESIGNATION
HOT ROLLED BAR	A529 GRADE 55 Fy = 55 ksi MIN.
STRUCTURAL WIDE FLANGE SHAPES	A992 Fy = 50 ksi MIN.
STRUCTURAL CHANNEL/ANGLE	A36 Fy = 36 ksi MIN.
STRUCTURAL STEEL SHEET	A570 GRADE 50 Fy = 50 ksi MIN.
STRUCTURAL STEEL PLATE	A572 GRADE 50 Fy = 50 ksi MIN.
COLD FORMED SHAPES	A570 GRADE 55 Fy = 55 ksi Min.
COLD FORMED SHAPES (GALV.)	A653 55M GRADE 55 CLASS 1 G40 Fy = 55 ksi Min.
ROOF & WALL SHEETING (SCREW DOWN ROOF)	A653 SS GRADE 50 CLASS 1 OR 2 G90 26 Ga. Fy = 50 ksi Min.
ROOF & WALL SHEETING (STANDING SEAM ROOF)	A653 SS GRADE 40 G90 24 Ga. Fy = 40 ksi Min.
BOLTS	A307 & A325

HCI STEEL BUILDING SYSTEMS RESERVES THE RIGHT TO SUBSTITUTE THE ABOVE MATERIALS WITH EQUAL OR BETTER MATERIALS.

2.) A325 BOLT TIGHTENING REQUIREMENTS.
ALL HIGH STRENGTH BOLTS ARE A325 UNLESS NOTED OTHERWISE. HIGH STRENGTH BOLTS SHALL BE TIGHTENED BY THE "TURN OF THE NUT" METHOD IN ACCORDANCE WITH THE LATEST EDITION OF AISC "SPECIFICATION FOR STRUCTURAL JOINTS USING ASTM A325 OR A490 BOLTS". A325 BOLTS SHALL BE INSTALLED WITHOUT WASHERS WHEN TIGHTENED BY THE "TURN OF THE NUT" METHOD. ALL BOLTED CONNECTIONS, FOR SHEAR/BEARING CONNECTION TYPE WITH BOLT THREADS EXCLUDED FROM THE SHEAR PLANE SHALL BE SNUG TIGHT ONLY.

3.) ALL STRUCTURAL STEEL SHALL RECEIVE A RUST INHIBITIVE PRIMER. THIS PAINT IS NOT INTENDED FOR LONG TERM EXPOSURE TO THE ELEMENTS.

4.) PRE-FORMED CLOSURE STRIPS ARE PROVIDED AT THE EAVE BENEATH THE ROOF SHEETS, AT THE ENDWALL BETWEEN THE RAKE TRIM AND THE ENDWALL SHEETS AND AT THE SIDEWALL BETWEEN THE EAVE TRIM AND THE SIDEWALL SHEETS.

5.) ALL BRACING SHOWN AND PROVIDED BY HCI STEEL BUILDING SYSTEMS FOR THIS BUILDING IS REQUIRED AND SHALL BE INSTALLED BY THE ERECTOR AS A PERMANENT PART OF THE STRUCTURE. IF ADDITIONAL BRACING IS REQUIRED FOR STABILITY DURING ERECTION, IT SHALL BE THE ERECTOR'S RESPONSIBILTY TO DETERMINE THE AMOUNT OF SUCH BRACING, AND TO PROCURE AND INSTALL AS NEEDED.

6.) ERECTOR NOTE:
OSHA 2001 STEEL ERECTION STANDARDS - SUBPART "R" 1926.758(e), REQUIRES THAT, "IN GIRT AND EAVE STRUT-TO-FRAME CONNECTIONS, WHEN GIRTS OR EAVE STRUTS SHARE COMMON CONNECTION HOLES, AT LEAST ONE BOLT WITH ITS WRENCH TIGHT NUT REMAIN CONNECTED TO THE FIRST MEMBER SO THAT THE GIRT OR EAVE STRUT IS ALWAYS SECURED AGAINST DISPLACEMENT. HCI HAS PROVIDED AN ADEQUATE QTY OF THINHEAD BOLTS FOR THIS PURPOSE. HOWEVER, IT IS THE RESPONSIBILITY OF THE CONTRACTOR TO UNDERSTAND AND FOLLOW OSHA SAFETY REGULATIONS AND PROCEDURES.

CUSTOMER RESPONSIBILITIES

1.) IT IS THE RESPONSIBILITY OF THE ERECTOR TO PERFORM THE WORK IN A SAFE MANNER AND TO OBEY ALL THE SAFETY CODES.

2.) IT IS THE RESPONSIBILITY OF THE CUSTOMER TO ENSURE THAT ALL PROJECT PLANS, SPECIFICATIONS AND APPLIED DESIGN LOADS FULLY MEET THE PROPOSED INTENT AS WELL AS COMPLY WITH ALL APPLICABLE REQUIREMENTS OF ANY GOVERNING AUTHORITES, AND OBTAIN THE APPROPRIATE APPROVALS AND/OR PERMITS AS MAY BE REQUIRED FROM CITY, COUNTY, STATE OR FEDERAL AGENCIES.

3.) THE BUILDING WILL BE SUPPLIED AS THE HCI DRAWINGS INDICATE. IT IS THE RESPONSIBILITY OF THE CUSTOMER TO ENSURE THE BUILDING BEING SUPPLIED MEETS THE PROJECT REQUIREMENTS.

4.) IT IS THE RESPONSIBILITY OF THE CUSTOMER FOR OVERALL PROJECT COORDINATION, INTERFACE, COMPATIBILITY AND DESIGN CONCERNING ANY MATERIALS NOT SUPPLIED BY HCI STEEL BUILDING SYSTEMS, INC. WITH THE BUILDING TO BE SUPPLIED BY HCI STEEL BUILDING SYSTEMS, INC. THE SPECIFIC DESIGN CRITERIA CONCERNING THIS INTERFACE BETWEEN MATERIALS MUST BE FURNISHED BY THE CUSTOMER PRIOR TO RELEASE FOR FABRICATION, OR THE DESIGN ASSUMPTIONS OF HCI STEEL BUILDING SYSTEMS WILL GOVERN.

5.) IT IS THE RESPONSIBILITY OF THE CUSTOMER TO VERIFY ALL DESIGN CRITERIA INCLUDING DEFLECTIONS AND TO NOTIFY HCI STEEL BUILDING SYSTEMS OF ANY DISCREPANCIES OR INCONSISTENCIES PRIOR TO RELEASE FOR FABRICATION.

6.) THE CUSTOMER IS RESPONSIBLE FOR THE ACCURATE SETTING OF ANCHOR BOLTS AND ERECTION OF STEEL IN ACCORDANCE WITH THE "FOR CONSTRUCTION" DRAWINGS ONLY. (SEE ANCHOR BOLT PLAN FOR ADDITIONAL FOUNDATION AND ANCHOR BOLT NOTES)

7.) UNLESS SPECIFICALLY STATED OTHERWISE WITHIN THE HCI STEEL BUILDING SYSTEMS PURCHASE AGREEMENT, THE FOLLOWING SHALL GOVERN:

a.) THIS BUILDING DRAWING PACKAGE AND ANY ACCOMPANYING CALCULATIONS REPRESENT THE PROJECT AS IT WILL SUPPLIED. THE BUILDING WILL BE SUPPLIED EXACTLY AS THE DRAWINGS INDICATE.

b.) ANY FIELD MODIFICATIONS, ALTERATIONS, OR THE ATTACHMENT OF ANY EQUIPMENT OR COMPONENT TO THIS HCI STEEL BUILDING SYSTEM, OR THE OMITTED INSTALLATION OF ANY PARTS OR PIECES, WITHOUT THE EXPRESS WRITTEN APPROVAL OF HCI STEEL BUILDING SYSTEM, INC. SHALL VOID ANY AND ALL WARRANTIES.

CUSTOMER APPROVAL:

ALL INFORMATION CONTAINED HEREIN HAS BEEN REVIEWED AND FOUND TO BE CORRECT AND CONSISTENT WITH MY INTENT AND PURPOSE. I REQUEST THAT H C I STEEL BUILDING SYSTEMS PROCEED WITH FABRICATION. I UNDERSTAND AND ACCEPT ALL CUSTOMER RESPONSIBILITIES.

CHECK ONE

- [ ] REVISE AND RESUBMIT
- [ ] APPROVED FOR FABRICATION AS NOTED
- [ ] APPROVED FOR FABRICATION

SIGNED: DATE:

BASIC BUILDING SIZE: SPAN 60'-0" x LENGTH 80'-0" x EAVE HT. 20'-0"
ROOF PITCH: 2:12
DESIGN CODE/ED.: IBC 2000 EXPOSURE: C SEISMIC DATA: Sms = 1.50 Ss = 1.50 Fa = 1.00 I_E = 1.00
LIVE LOAD: 20 psf. DEAD LOAD: 2.5 psf. ADDITIONAL LOAD: NONE
SLOPED ROOF SNOW LOAD: 40 psf. GROUND SNOW LOAD: _____ psf.
CLOSURE: Enclosed COLLATERAL LOAD: 1 psf WIND LOAD: 100 mph.

REV.	DATE	REVISION
A	3/5/04	FOR APPROVAL

HCI STEEL BUILDING SYSTEMS, INC.
18520 67th AVE. N.E.
ARLINGTON, WA 98223
(360) 435-8871
FAX (360) 435-9267

BUILDING DRAWING PACKAGE

CUSTOMER: STEPPERS CONSTRUCTION
ADDRESS: 6382 E. BEECHCRAFT RD.
WASILLA, AK
PHONE: (907)748-1880 FAX: (907)746-2670
PROJECT: CENTRAL LANDFILL STORAGE
LOCATION: PALMER, AK

DRAWING RECORD

DESCRIPTION	PAGE NO.
ANCHOR BOLT PLAN	PEB-1 & 2
ROOF FRAMING PLAN	PEB-3
SIDEWALL ELEVATIONS	PEB-4 & 5
ENDWALL ELEVATIONS	PEB-6 & 7
CROSS SECTION	PEB-8
BRIDGING DETAILS	PEB-9 & 10
B.F.E.W. DETAILS	PEB-11
FRAMED OPENINGS	PEB-12
DOOR DETAILS	PEB-13 & 14
WINDOW DETAILS	PEB-
ROOF DETAILS	PEB-16
WALL DETAILS	PEB-15
GUTTER DETAILS	PEB-
DETAILS	PEB-
DETAILS	PEB-
DETAILS	PEB-

JOB NO.: 2499

STATE OF ALASKA 49TH
Michael R. Lapierre
No. CE10863
3/5/04
REGISTERED PROFESSIONAL ENGINEER

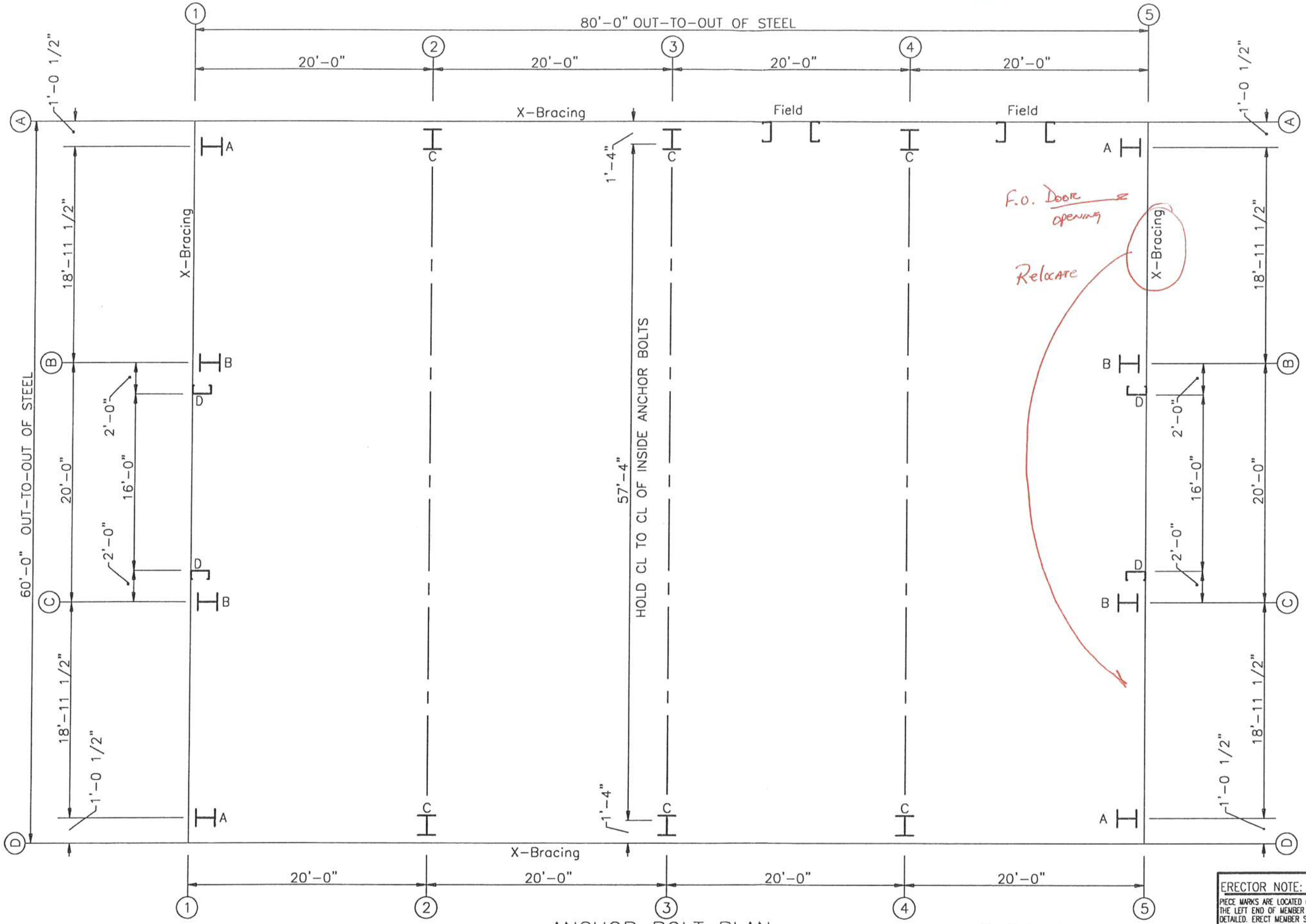

ANCHOR BOLT PLAN NOTE: All Base Plates @ 100'-0" (U.N.)

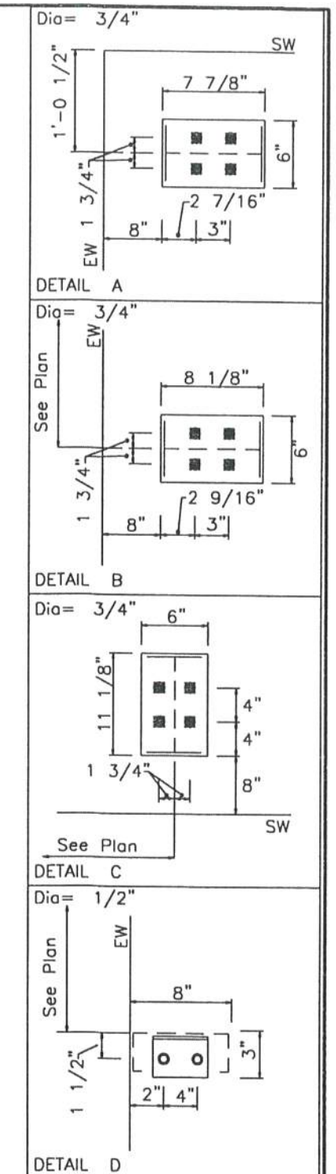

ERECTOR NOTE:
PIECE MARKS ARE LOCATED ON THE LEFT END OF MEMBER AS DETAILED. ERECT MEMBER SO PIECE MARK IS IN POSITION SHOWN ON ERECTION DRAWINGS.

STATE OF ALASKA 49TH Michael R. Lapierre No. CE10863 3/5/04 REGISTERED PROFESSIONAL ENGINEER

REV.	DATE	DESCRIPTION	REV.	DATE	DESCRIPTION
			A	3/5/04	FOR APPROVAL

REVISIONS

HCI STEEL BUILDING SYSTEMS INC

PROJECT:	CENTRAL LANDFILL STORAGE
CUSTOMER:	STEPPERS CONSTRUCTION
LOCATION:	PALMER AK

DRAWN:	DATE:	JOB NO.	PAGE:
RHin	03/04/04	2499	PEB-1
CHECK:	DATE:		

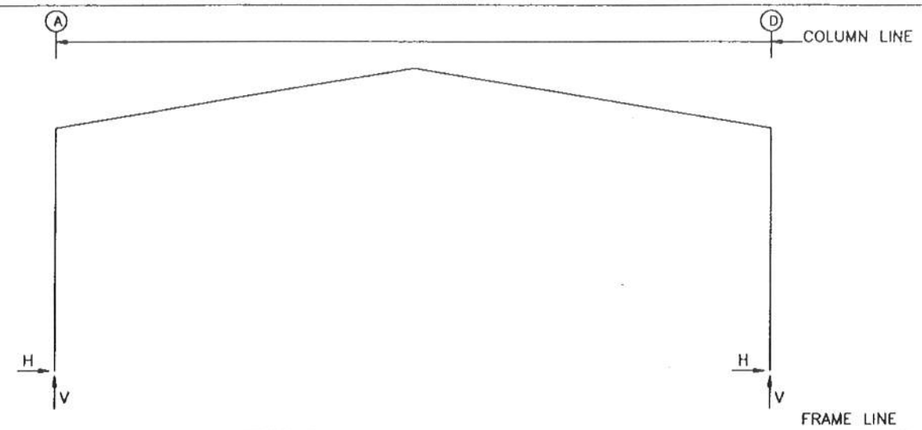

RIGID FRAME: MAXIMUM REACTIONS, ANCHOR BOLTS, & BASE PLATES

Frm Line	Col Line	Load Id	Hmax H	V Vmax	Load Id	Hmin H	V Vmin	Anc. No	Bolt D(in)	Base Wid	Plate (in) Len	Plate (in) Thk	Grout (in)
2 *	A	1	13.5	27.3	2	-5.7	-8.6	4	0.750	6.000	11.13	0.500	0.0
		7	12.6	36.3	4	-0.5	-11.9						
2 *	D	3	5.7	-8.6	1	-13.5	27.3	4	0.750	6.000	11.13	0.500	0.0
		6	-12.6	36.3	5	0.5	-11.9						

2 * Frame lines: 2 3 4

RIGID FRAME: BASIC COLUMN REACTIONS (k)

Frame Line	Column Line	Dead Horiz	Dead Vert	Collateral Horiz	Collateral Vert	Live Horiz	Live Vert	Wind_L1 Horiz	Wind_L1 Vert	Wind_R1 Horiz	Wind_R1 Vert	Wind_L2 Horiz	Wind_L2 Vert
2 *	A	1.11	2.72	0.31	0.61	12.10	24.00	-6.41	-10.21	-0.94	-6.78	-5.81	-5.98
2 *	D	-1.11	2.72	-0.31	0.61	-12.10	24.00	0.94	-6.78	6.41	-10.21	0.34	-2.55

Frame Line	Column Line	Wind_R2 Horiz	Wind_R2 Vert	Seismic_L Horiz	Seismic_L Vert	Seismic_R Horiz	Seismic_R Vert	LnWind_L Horiz	LnWind_L Vert	LnWind_R Horiz	LnWind_R Vert	F1UNB_LL 1 Horiz	F1UNB_LL 1 Vert
2 *	A	-0.34	-2.55	-1.73	-1.10	1.73	1.10	-1.21	-13.53	-1.83	-12.07	11.03	14.24
2 *	D	5.81	-5.98	-1.73	1.10	1.73	-1.10	1.83	-12.07	1.21	-13.53	-11.14	32.96

Frame Line	Column Line	F1UNB_LL 2 Horiz	F1UNB_LL 2 Vert
2 *	A	11.14	32.96
2 *	D	-11.03	14.24

2 * Frame lines: 2 3 4

ENDWALL COLUMN: REACTIONS, ANCHOR BOLTS, & BASE PLATES

Frm Line	Col Line	Dead Vert	Coll Vert	Live Vert	Wind-Left Horiz	Wind-Left Vert	Wind-Right Horiz	Wind-Right Vert	Out-Of-Plane Wd P Horiz	Out-Of-Plane Wd S Horiz
1	D	0.6	0.1	3.3	0.0	-1.1	0.0	-1.8	-1.6	1.8
1	C	1.3	0.2	8.9	0.0	-2.9	0.0	-4.4	-3.7	4.1
1	B	1.3	0.2	8.9	0.0	-1.2	3.1	-6.2	-3.7	4.1
1	A	0.6	0.1	3.3	3.1	-5.1	0.0	2.2	-1.6	1.8
5	D	0.6	0.1	3.5	0.0	-1.9	0.0	-1.2	-1.6	1.8
5	C	1.3	0.2	9.2	0.0	-4.6	0.0	-3.0	-3.7	4.1
5	B	1.3	0.2	9.2	3.2	-6.4	0.0	-1.2	-3.7	4.1
5	A	0.6	0.1	3.5	0.0	2.2	3.2	-5.2	-1.6	1.8

ENDWALL COLUMN: MAXIMUM REACTIONS, ANCHOR BOLTS, & BASE PLATES

Frm Line	Col Line	Load Id	Hmax H	V Vmax	Load Id	Hmin H	V Vmin	Anc. No	Bolt D(in)	Base Wid	Plate (in) Len	Plate (in) Thk	Grout (in)
1	A	8	1.8	-1.8	9	-1.6	-1.4	4	0.750	6.000	7.875	0.375	0.0
		10	0.0	7.4	11	1.8	-4.7						
1	B	8	4.1	-4.6	9	-3.7	-3.7	4	0.750	6.000	8.125	0.375	0.0
		10	0.0	15.1	12	4.1	-5.4						
1	C	8	4.1	-4.6	9	-3.7	-2.1	4	0.750	6.000	8.125	0.375	0.0
		13	0.0	15.1	8	4.1	-4.6						
1	D	8	1.8	-1.8	9	-1.6	-0.8	4	0.750	6.000	7.875	0.375	0.0
		13	0.0	7.4	8	1.8	-1.8						
5	D	8	1.8	-1.9	9	-1.6	-1.5	4	0.750	6.000	7.875	0.375	0.0
		14	0.0	7.6	8	1.8	-1.9						
5	C	8	4.1	-4.7	9	-3.7	-3.8	4	0.750	6.000	8.125	0.375	0.0
		14	0.0	15.6	8	4.1	-4.7						
5	B	8	4.1	-4.7	9	-3.7	-2.2	4	0.750	6.000	8.125	0.375	0.0
		15	0.0	15.6	11	4.1	-5.6						
5	A	8	1.8	-1.9	9	-1.6	-0.9	4	0.750	6.000	7.875	0.375	0.0
		15	0.0	7.6	12	1.8	-4.9						

BRACING REACTIONS:

Wall Loc	Wall Line	Col Line	Wind Horz	Wind Vert	Seismic Horz	Seismic Vert
L_EW	1	A	3.1	3.3	2.1	2.2
		B	3.1	3.3	2.1	2.2
F_SW	D	2 ,3	5.0	4.5	7.2	6.4
R_EW	5	B	3.2	3.4	2.1	2.2
		A	3.2	3.4	2.1	2.2
B_SW	A	3 ,2	5.0	4.5	7.2	6.4

ANCHOR BOLT SUMMARY

	Qnt	Loc	Dia (in)	Proj (in)
O	8	DJ	1/2"	2.00
⊠	32	EW	3/4"	3.00
⊠	24	RF	3/4"	3.00

NOTES FOR REACTIONS

1. All loading conditions are examined and only maximum/minimum H or V and the corresponding H or V are reported.
2. Positive reactions are as shown in the sketch. Foundation loads are in opposite directions.
3. Bracing reactions are in the plane of the brace with the H pointing away from the braced bay. The vertical reaction is downward.
4. Building reactions are based on the following building data:

Width (ft)	=	60.0
Length (ft)	=	80.0
Eave Height (ft)	=	20.0/20.0
Roof Slope (rise/12)	=	2.0/2.0
Dead Load (psf)	=	2.5
Collateral Load (psf)	=	1.0
Live Load (psf)	=	20.0
Snow Load (psf)	=	40.0
Wind Speed (mph)	=	100.0
Wind Code	=	IBC 00
Exposure	=	C
Closed/Open	=	C
Importance - Wind	=	1.00
Importance - Seismic	=	1.00
Seismic Coeff (Fa*Ss)	=	1.50

5. Loading conditions are:
   1 DL+CL+LL
   2 0.60DL+WL1
   3 0.60DL+WR1
   4 0.60DL+LnWndL
   5 0.60DL+LnWndR
   6 DL+CL+F1UNB_LL 1
   7 DL+CL+F1UNB_LL 2
   8 0.60DL+WS
   9 0.60DL+WL1+WP
   10 DL+CL+E1UNB_LL 2
   11 0.60DL+WL2+WS
   12 0.60DL+WR2+WS
   13 DL+CL+E1UNB_LL 1
   14 DL+CL+E2UNB_LL 2
   15 DL+CL+E2UNB_LL 1

GENERAL NOTES

FOUNDATION NOTES:

1. ANCHOR BOLTS, EMBEDDED ITEMS AND FOUNDATION DESIGN ARE NOT BY HCI AND REQUIRE SPECIAL REINFORCEMENT.
2. FOUNDATION MUST BE SQUARE, LEVEL AND SMOOTH. ALL ANCHOR BOLTS MUST BE PLACED ACCURATELY IN THE POSITIONS SHOWN OR STEEL WILL NOT FIT.
3. BOTTOM OF ALL BASE PLATES TO BE AT SAME ELEVATION UNLESS NOTED.
4. COLUMN REACTIONS ARE IN THOUSANDS OF POUNDS.
5. ANCHOR BOLTS ARE TO BE TYPE A36 AND REQUIRE FLAT WASHERS.
6. REACTIONS SHOULD BE CONSIDERED SWITCHABLE WHEN LOADS ARE APPLIED FROM THE OPPOSITE SIDE.
7. ALLOWABLE CONCRETE BEARING PRESSURE USED FOR BASE PLATE DESIGN IS 1.05 KSI.

STATE OF ALASKA 49TH
Michael R. Lapierre
No. CE10863
3/5/04
REGISTERED PROFESSIONAL ENGINEER

ERECTOR NOTE:
PIECE MARKS ARE LOCATED ON THE LEFT END OF MEMBER AS DETAILED. ERECT MEMBER SO PIECE MARK IS IN POSITION SHOWN ON ERECTION DRAWINGS.

REV.	DATE	DESCRIPTION

REVISIONS

REV.	DATE	DESCRIPTION
A	3/5/04	FOR APPROVAL

REVISIONS

HCI STEEL BUILDING SYSTEMS INC.

PROJECT:	CENTRAL LANDFILL STORAGE
CUSTOMER:	STEPPERS CONSTRUCTION
LOCATION:	PALMER, AK.

DRAWN:	DATE:	JOB NO.	PAGE:
	03/03/04	2499	PEB-2
CHECK:	DATE:		

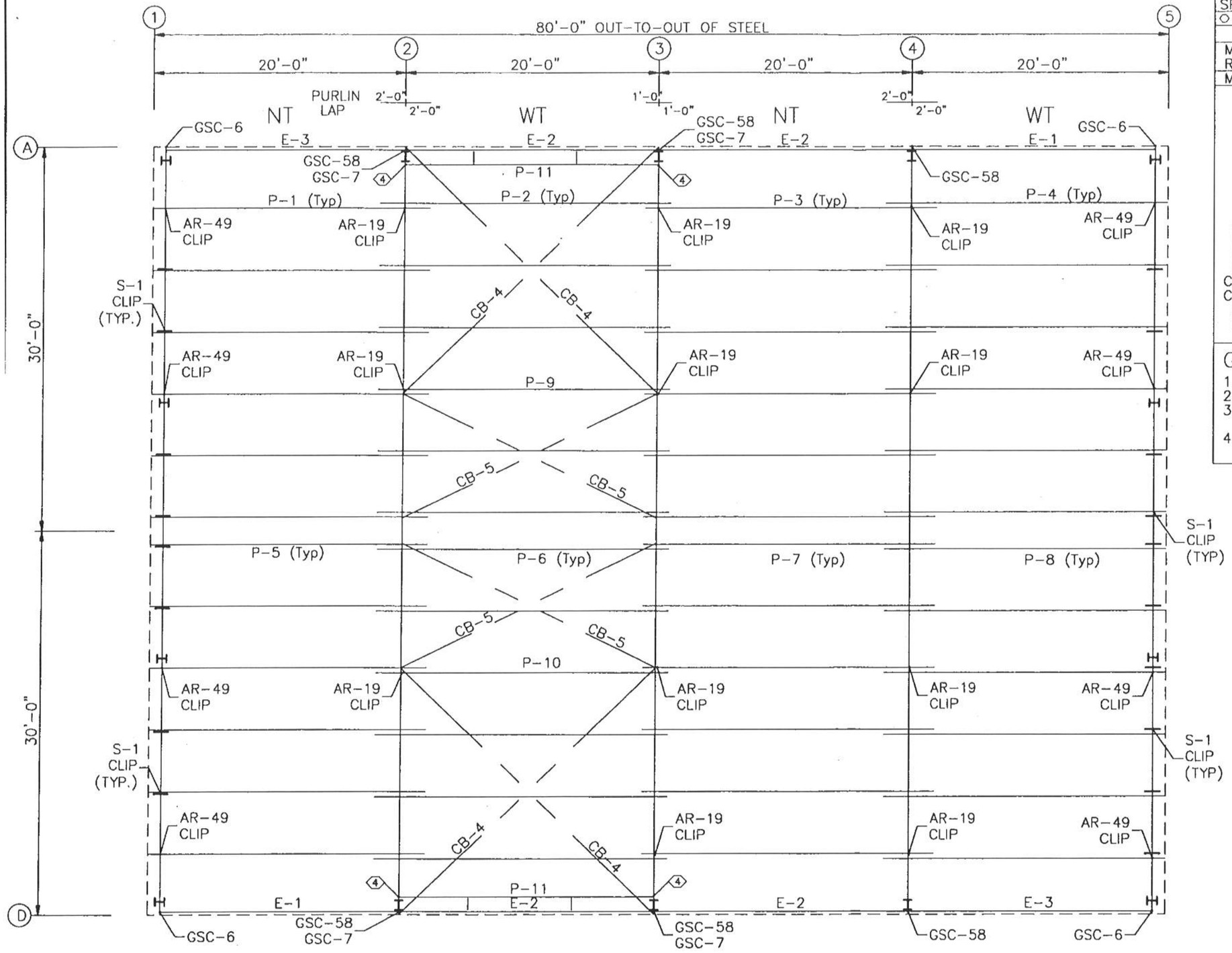

ROOF FRAMING PLAN

SPECIAL BOLTS					
⊙ ID	QUAN	TYPE	DIA	LEN	WASH
4	4	A325	1/2"	1 1/4"	1

MEMBER TABLE
ROOF PLAN

MARK	SIZE
P-1	9Z25U14
P-2	9Z25U14
P-3	9Z25U14
P-4	9Z25U14
P-5	9Z25U14
P-6	9Z25U14
P-7	9Z25U14
P-8	9Z25U14
P-9	9Z25U12
P-10	9Z25U12
E-1	10G20E14
E-2	10G20E14
E-3	10G20E14
CB-4	ROD875
CB-5	ROD500
S-1	9Z25U14
P-11	9Z25U14

GENERAL NOTES:

1. NT INDICATES NARROW TOP FLANGE PURLINS
2. WT INDICATES WIDE TOP FLANGE PURLINS
3. SEE DWG PEB-9 FOR NT/WT SECONDARY CONNECTION DETAILS
4. SEE DWG PEB-9 & 10 FOR AR-49,AR-19/GSC-58 GSC-6 & GSC-7 STRUT CLIP CONNECTION DETAILS

ERECTOR NOTE:
PIECE MARKS ARE LOCATED ON THE LEFT END OF MEMBER AS DETAILED. ERECT MEMBER SO PIECE MARK IS IN POSITION SHOWN ON ERECTION DRAWINGS.

STATE OF ALASKA
49TH
Michael R. Lapierre
No. CE10863
3/5/04
REGISTERED PROFESSIONAL ENGINEER

REV.	DATE	DESCRIPTION

REVISIONS

REV.	DATE	DESCRIPTION
1	3/5/04	FOR APPROVAL

REVISIONS

HCI STEEL BUILDING SYSTEMS INC

PROJECT:	CENTRAL LANDFILL STORAGE
CUSTOMER:	STEPPERS CONSTRUCTION
LOCATION:	PALMER, AK

DRAWN:	DATE:	JOB NO.	PAGE:
R.Hu	03/03/04	2499	PEB-3
CHECK:	DATE:		

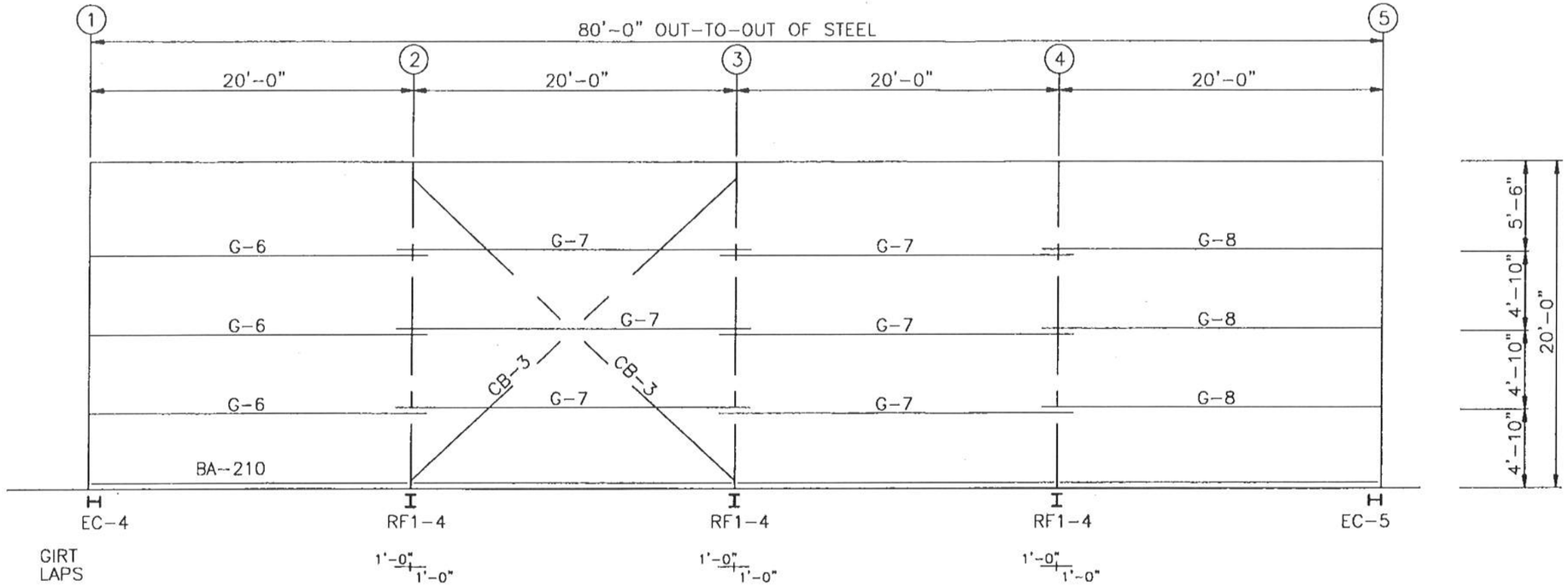

MEMBER TABLE LINE D	
MARK	SIZE
G-6	8Z25U16
G-7	8Z25U16
G-8	8Z25U16
CB-3	ROD100

FRONT SIDEWALL FRAMING: LINE D

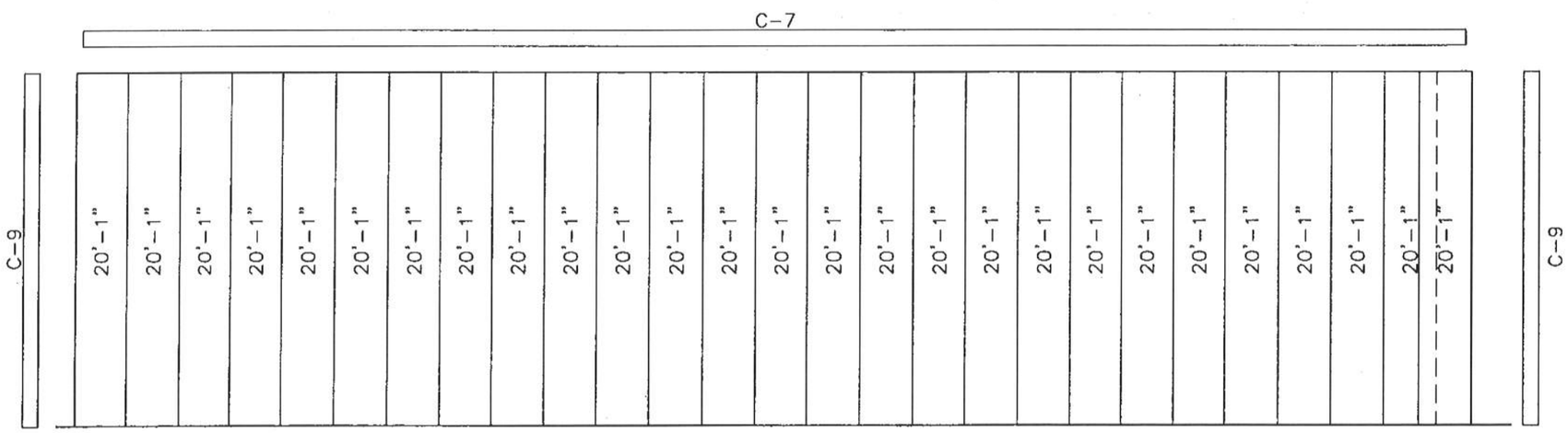

FRONT SIDEWALL SHEETING & TRIM: LINE D

PANELS: 26 Ga. HUSKY HI-RIB -

ERECTOR NOTE:
PIECE MARKS ARE LOCATED ON THE LEFT END OF MEMBER AS DETAILED. ERECT MEMBER SO PIECE MARK IS IN POSITION SHOWN ON ERECTION DRAWINGS.

STATE OF ALASKA 49TH
Michael R. Lapierre
No. CE10863
3/5/04
REGISTERED PROFESSIONAL ENGINEER

REV.	DATE	DESCRIPTION

REVISIONS

REV.	DATE	DESCRIPTION
A	3/5/04	FOR APPROVAL

REVISIONS

HCI STEEL BUILDING SYSTEMS INC.

PROJECT:	CENTRAL LANDFILL STORAGE
CUSTOMER:	STEPPERS CONSTRUCTION
LOCATION:	PALMER, AK

DRAWN:	DATE: 03/03/04	JOB NO.	PAGE:
CHECK:	DATE:	2499	PEB-4

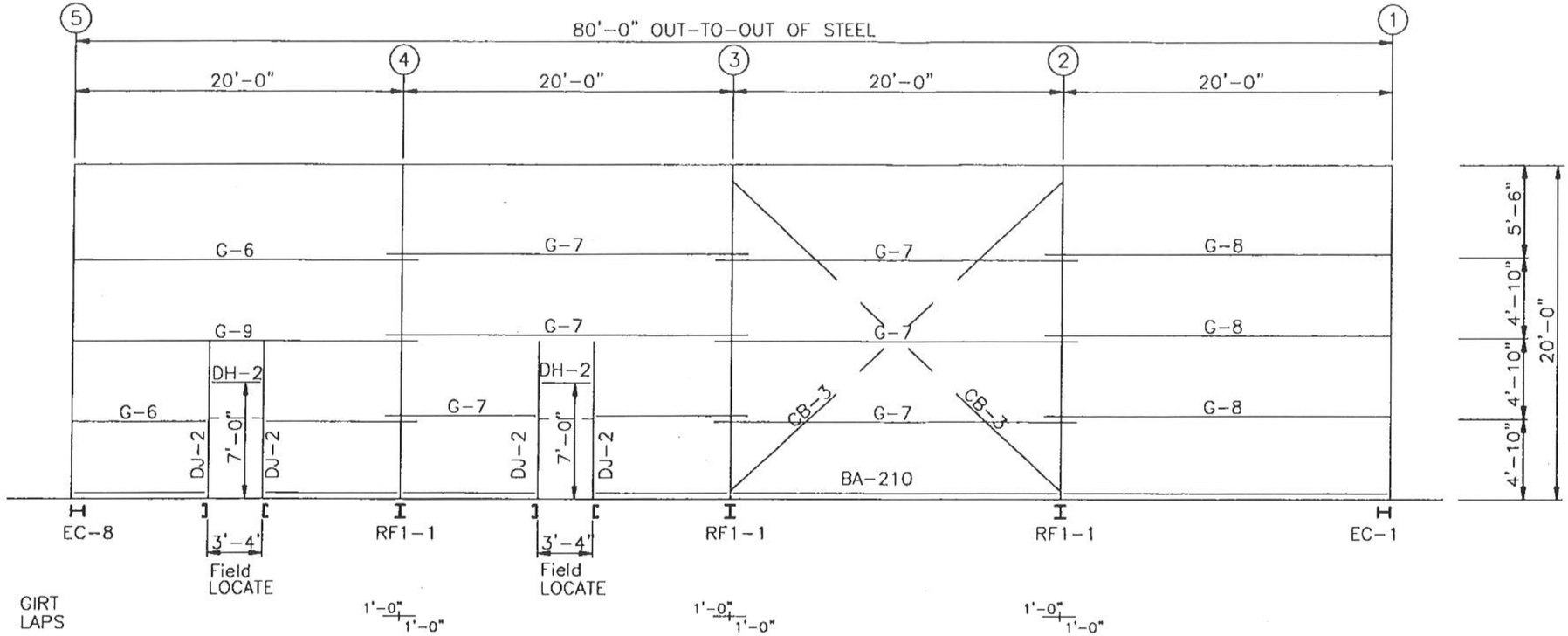

MEMBER TABLE LINE A	
MARK	SIZE
DJ-2	8C25E16
DH-2	8C25E16
G-6	8Z25U16
G-7	8Z25U16
G-8	8Z25U16
G-9	8Z25U12
CB-3	ROD100

BACK SIDEWALL FRAMING: LINE A

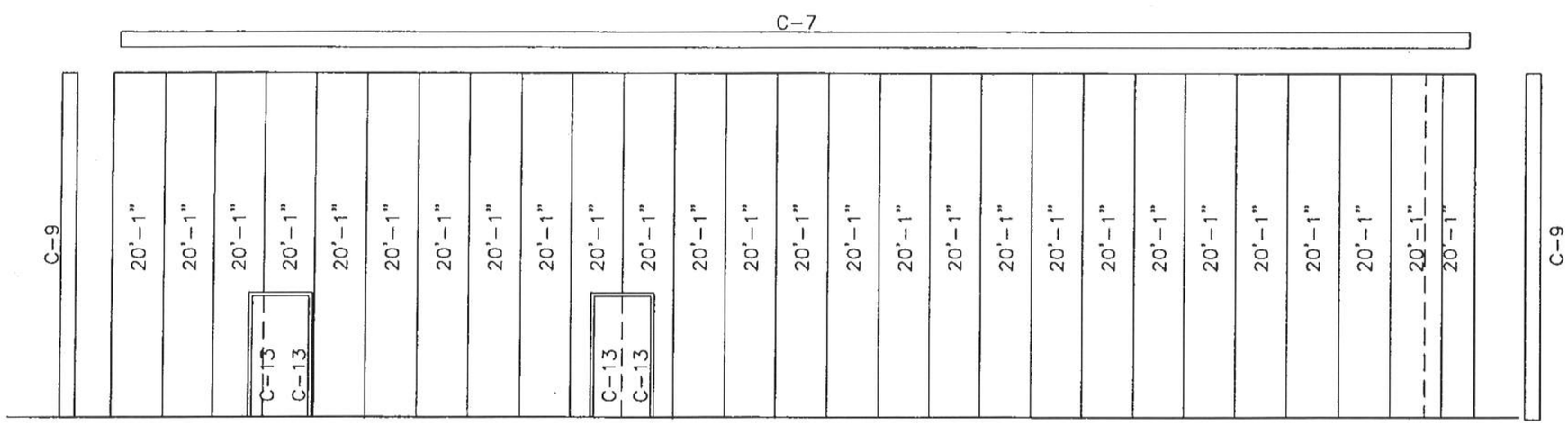

BACK SIDEWALL SHEETING & TRIM: LINE A

PANELS: 26 Ga. HUSKY HI-RIB –

ERECTOR NOTE:
PIECE MARKS ARE LOCATED ON THE LEFT END OF MEMBER AS DETAILED. ERECT MEMBER SO PIECE MARK IS IN POSITION SHOWN ON ERECTION DRAWINGS.

STATE OF ALASKA 49TH Michael R. Lapierre No. CE10863 3/5/04 REGISTERED PROFESSIONAL ENGINEER

REV.	DATE	DESCRIPTION

REVISIONS

REV.	DATE	DESCRIPTION
1	3/5/04	FOR APPROVAL

REVISIONS

HCI STEEL BUILDING SYSTEMS, INC.

PROJECT:	CENTRAL LANDFILL STORAGE
CUSTOMER:	STEPPERS CONSTRUCTION
LOCATION:	PALMER, AK

DRAWN:	DATE:	JOB NO.	PAGE:
	03/02/04	2499	PEB-5
CHECK:	DATE:		

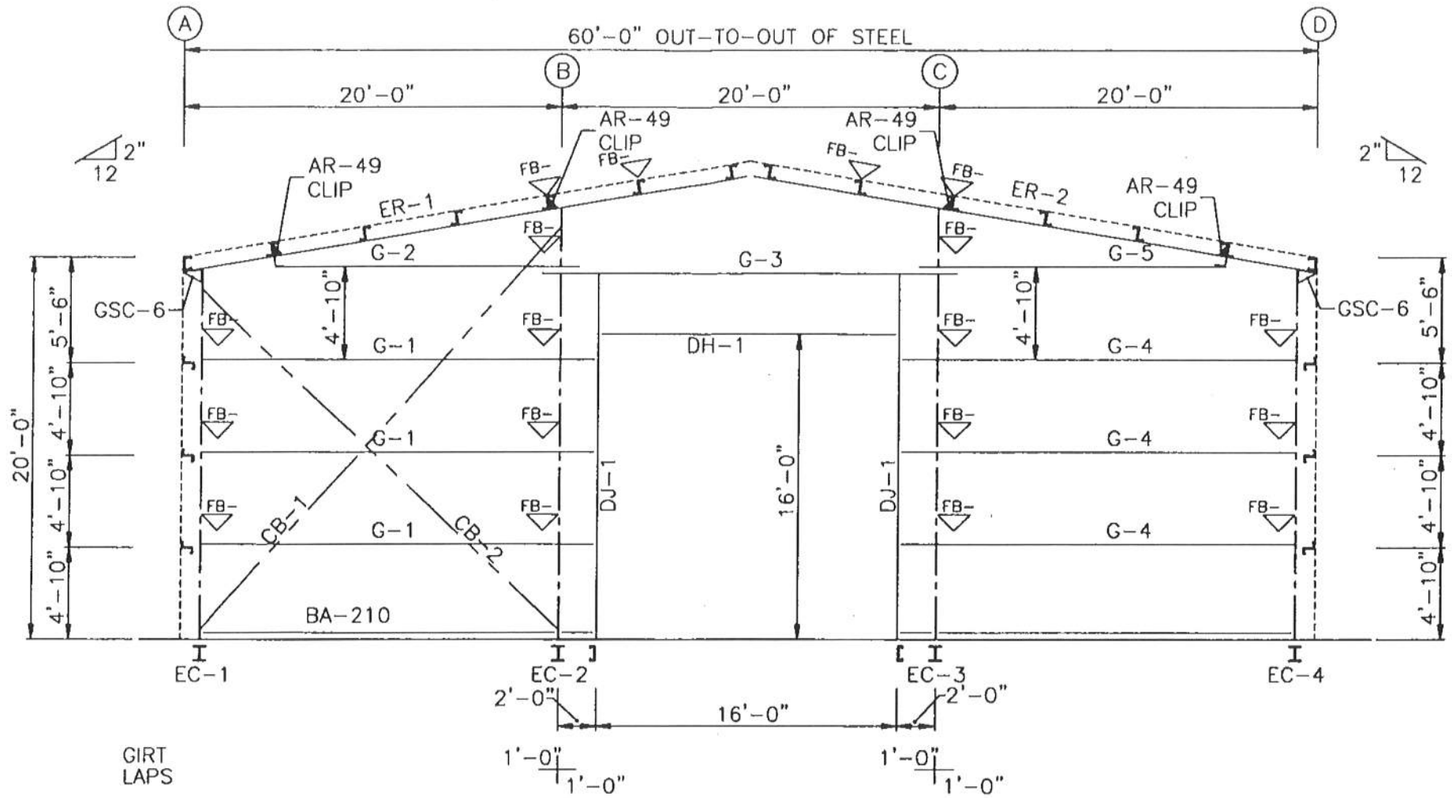

LEFT ENDWALL FRAMING: LINE 1

MEMBER TABLE LINE 1	
MARK	SIZE
EC-1	W8x10
EC-2	W8x15
EC-3	W8x15
EC-4	W8x10
ER-1	W12x19
ER-2	W12x19
DJ-1	8C25E12
DH-1	8C25E16
G-1	8Z25U14
G-2	8Z25U16
G-3	8Z25U16
G-4	8Z25U14
G-5	8Z25U16
CB-1	ROD750
CB-2	ROD750

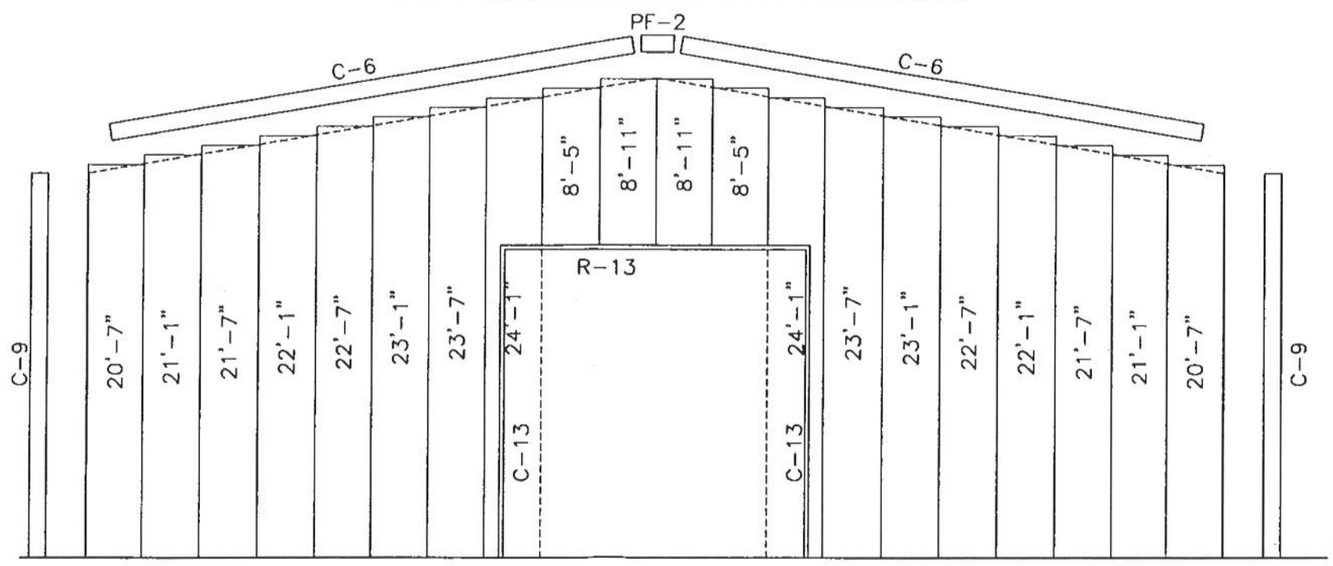

LEFT ENDWALL SHEETING & TRIM: LINE 1

PANELS: 26 Ga. HUSKY HI-RIB -

ERECTOR NOTE:
PIECE MARKS ARE LOCATED ON THE LEFT END OF MEMBER AS DETAILED. ERECT MEMBER SO PIECE MARK IS IN POSITION SHOWN ON ERECTION DRAWINGS.

STATE OF ALASKA 49TH
Michael R. Lapierre
No. CE10863
3/5/04
REGISTERED PROFESSIONAL ENGINEER

REV.	DATE	DESCRIPTION

REVISIONS

REV.	DATE	DESCRIPTION
A	3/5/04	FOR APPROVAL

REVISIONS

HCI STEEL BUILDING SYSTEMS INC.

PROJECT:	CENTRAL LANDFILL STORAGE
CUSTOMER:	STEPPERS CONSTRUCTION
LOCATION:	PALMER, AK

DRAWN:	DATE:	JOB NO.	PAGE:
	03/03/04	2499	PEB-6
CHECK:	DATE:		

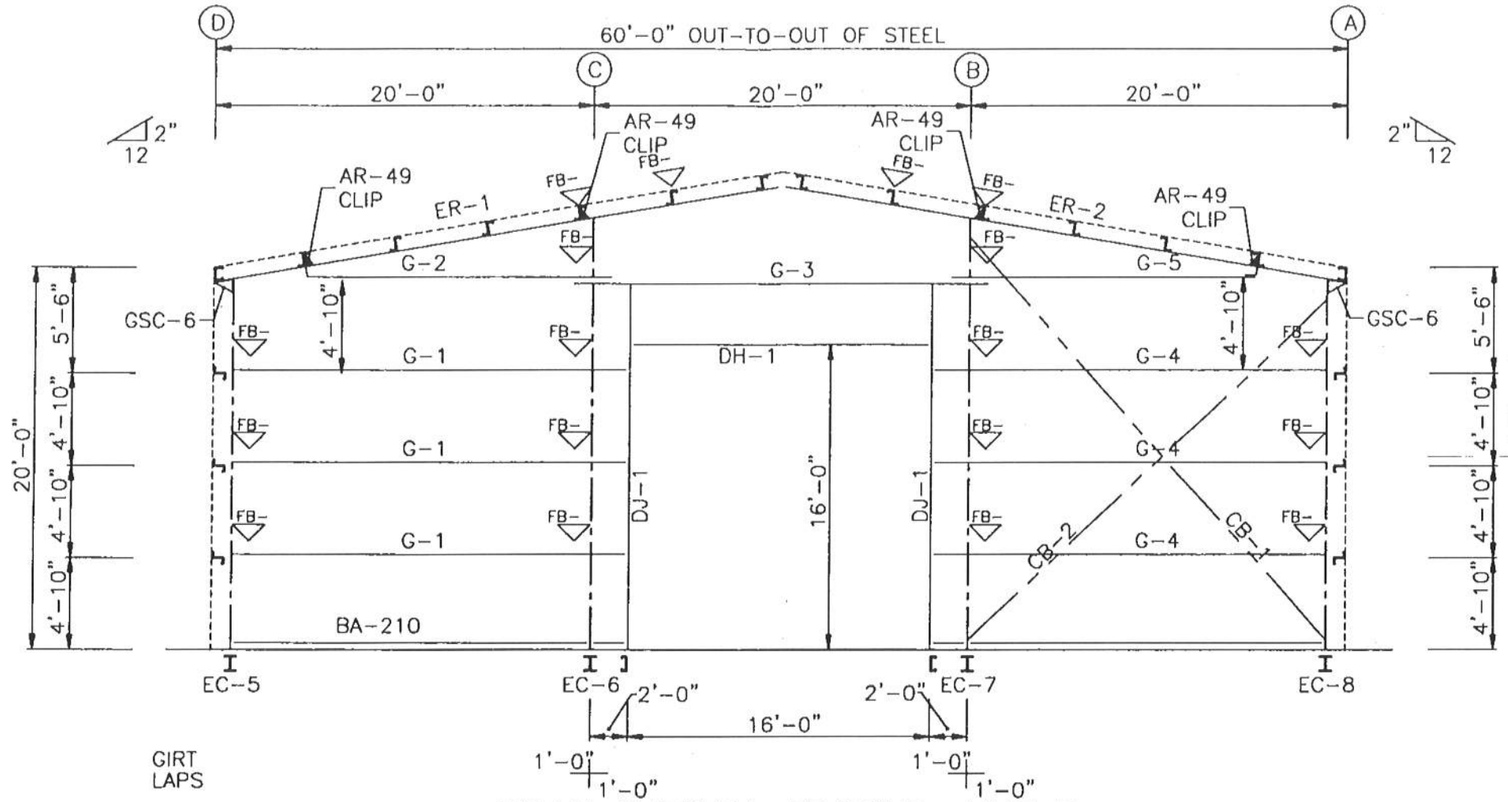

MEMBER TABLE LINE 5	
MARK	SIZE
EC-5	W8x10
EC-6	W8x15
EC-7	W8x15
EC-8	W8x10
ER-1	W12x19
ER-2	W12x19
DJ-1	8C25E12
DH-1	8C25E16
G-1	8Z25U14
G-2	8Z25U16
G-3	8Z25U16
G-4	8Z25U14
G-5	8Z25U16
CB-1	ROD750
CB-2	ROD750

RIGHT ENDWALL FRAMING: LINE 5

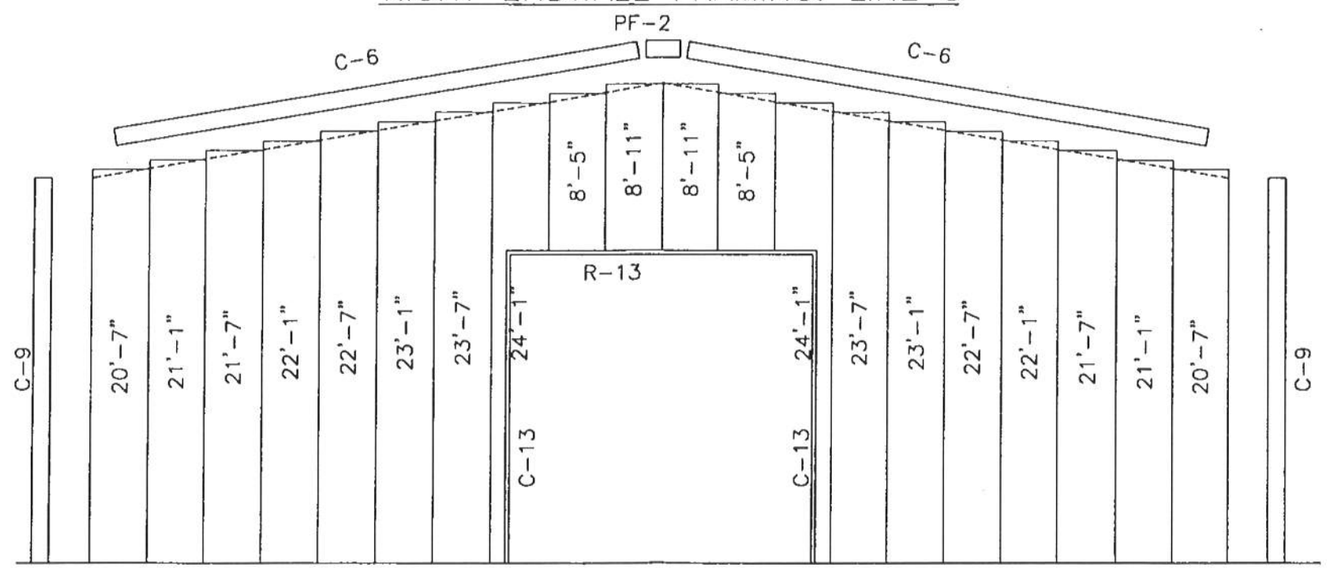

RIGHT ENDWALL SHEETING & TRIM: LINE 5

PANELS: 26 Ga. HUSKY HI-RIB –

ERECTOR NOTE:
PIECE MARKS ARE LOCATED ON THE LEFT END OF MEMBER AS DETAILED. ERECT MEMBER SO PIECE MARK IS IN POSITION SHOWN ON ERECTION DRAWINGS.

STATE OF ALASKA 49TH
Michael R. Lapierre
No. CE10863
3/5/04
REGISTERED PROFESSIONAL ENGINEER

REV.	DATE	DESCRIPTION

REVISIONS

REV.	DATE	DESCRIPTION
A	3/5/04	FOR APPROVAL

REVISIONS

HCI STEEL BUILDING SYSTEMS INC

PROJECT:	CENTRAL LANDFILL STORAGE
CUSTOMER:	STEPPERS CONSTRUCTION
LOCATION:	PALMER AK

DRAWN:	DATE:	JOB NO.	PAGE:
RH	03/03/04	2499	PEB-7
CHECK:	DATE:		

SPLICE PLATES & BOLTS									
Splice Mark	Quan Top	Bot	Int	Bolt Type	Dia	Bolt Len	Plate Size Wid	Thick	Length
Sp- 1	4	4	2	A325	0.875	2.75	6"	3/4"	3'-0 3/8"
Sp- 2	4	4	0	A325	0.750	2.50	6"	3/4"	1'-11 1/2"
Sp- 3	4	4	2	A325	0.875	2.75	6"	3/4"	3'-0 3/8"

MEMBER SIZE TABLE (in)					
MARK	WEB DEPTH START/END	WEB PLATE THICK	WEB PLATE LENGTH	OUTSIDE FLANGE T x W x LEN	INSIDE FLANGE T x W x LEN
RF1-1	10.5/33.5	0.188	236.2	5/16" x 6 x 231.5 1/4" x 6 x 28.8	5/16" x 6 x 205.2
RF1-2	29.0/16.0 16.0/16.0	0.250 0.135	145.8 180.0	1/4" x 6 x 139.8 5/16" x 6 x 186.0	5/16" x 6 x 146.3 1/4" x 6 x 177.3
RF1-3	16.0/16.0 16.0/29.0	0.135 0.250	180.0 145.8	5/16" x 6 x 186.0 1/4" x 6 x 139.8	1/4" x 6 x 177.3 5/16" x 6 x 146.3
RF1-4	33.5/10.5	0.188	236.2	1/4" x 6 x 28.8 5/16" x 6 x 231.5	5/16" x 6 x 205.2

▽FLANGE BRACES: B.S.(U.N.) FIELD CUT FB IF REQ
a - L2x2x14Ga.

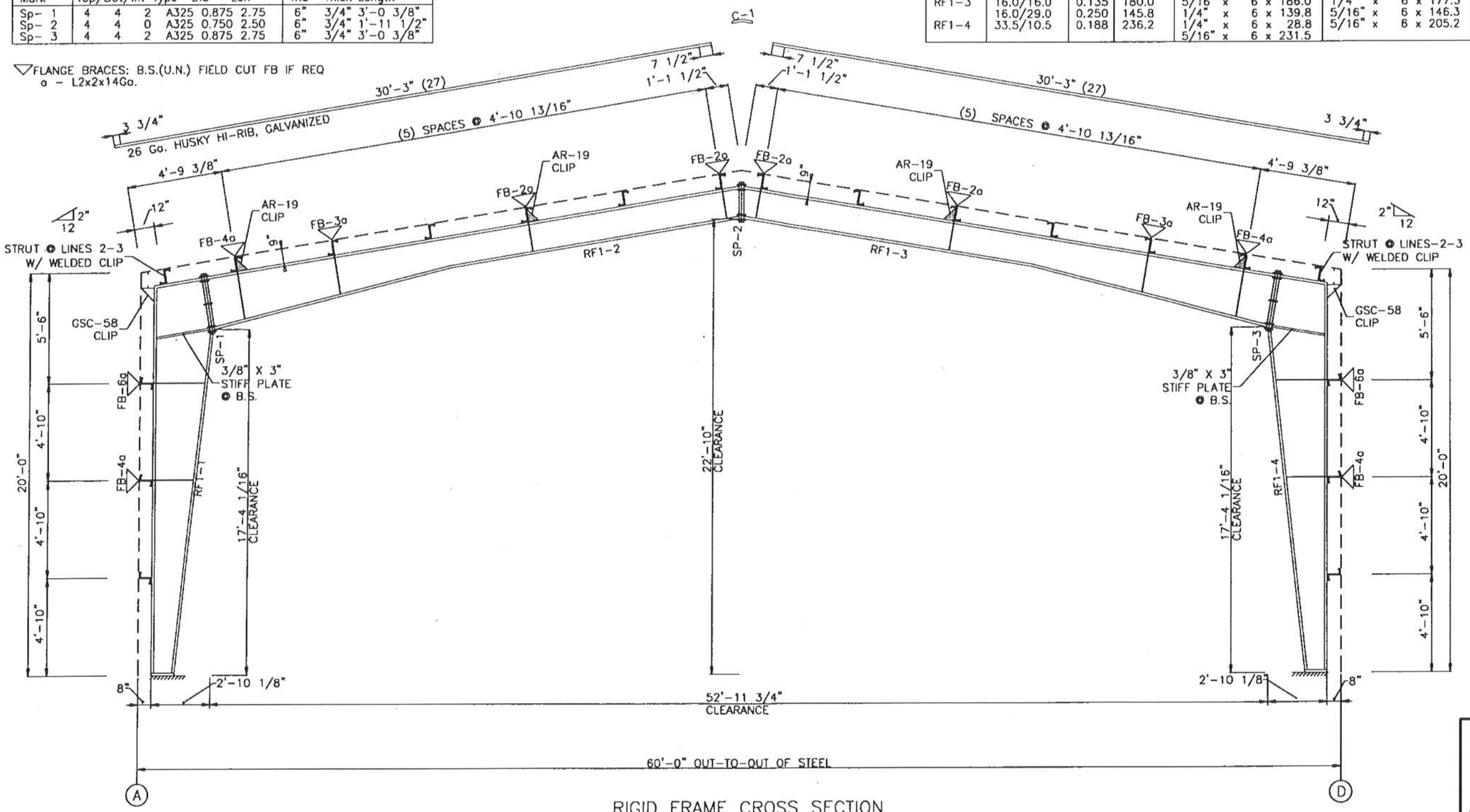

RIGID FRAME CROSS SECTION

FOR FRAME LINE 2 3 4

STATE OF ALASKA 49TH
Michael R. Lapierre
No. CE10863
3/5/04
REGISTERED PROFESSIONAL ENGINEER

ERECTOR NOTE:
PIECE MARKS ARE LOCATED ON THE LEFT END OF MEMBER AS DETAILED. ERECT MEMBER SO PIECE MARK IS IN POSITION SHOWN ON ERECTION DRAWINGS.

REV.	DATE	DESCRIPTION	REV.	DATE	DESCRIPTION
			1	3/5/04	FOR APPROVAL

HCI STEEL BUILDING SYSTEMS INC

PROJECT:	CENTRAL LANDFILL STORAGE	DRAWN: RHW	DATE: 03/03/04	JOB NO.	PAGE:
CUSTOMER:	STEPPERS CONSTRUCTION	CHECK:	DATE:	2499	PEB-8
LOCATION:	PALMER, AK				

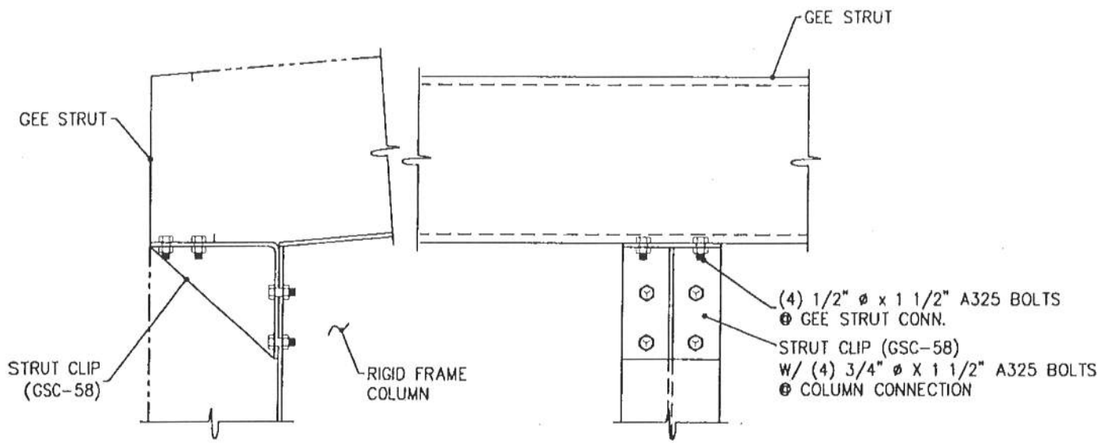

SECTION DETAIL

"G" STRUT CONN. - GSC-58 STRUT CLIP

(RIGID FRAME CONNECTION)

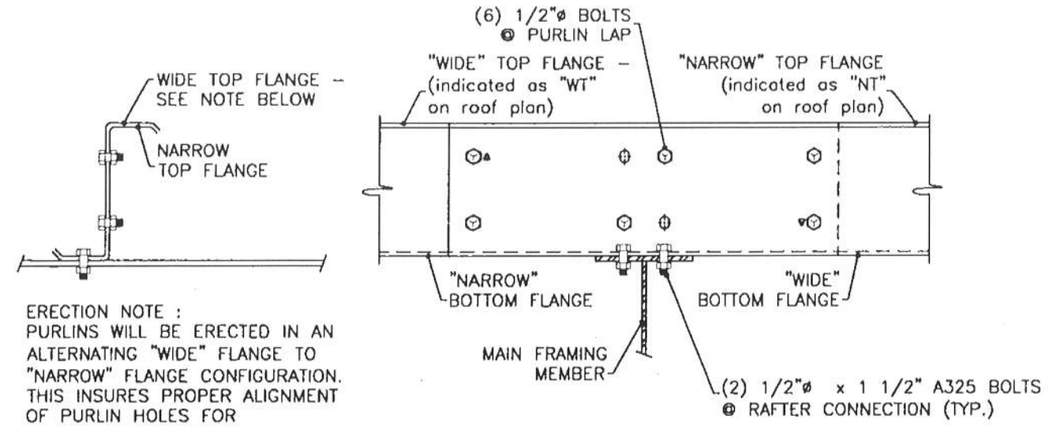

ERECTION NOTE :
PURLINS WILL BE ERECTED IN AN ALTERNATING "WIDE" FLANGE TO "NARROW" FLANGE CONFIGURATION. THIS INSURES PROPER ALIGNMENT OF PURLIN HOLES FOR CONNECTION OF BOLTED MEMBERS.

SEE ROOF PLAN FOR FLANGE LEG INDICATORS (WT) FOR WIDE TOP LEG OR (NT) FOR NARROW TOP LEG

LAP CONDITION

SECONDARY FLANGE CONNECTION

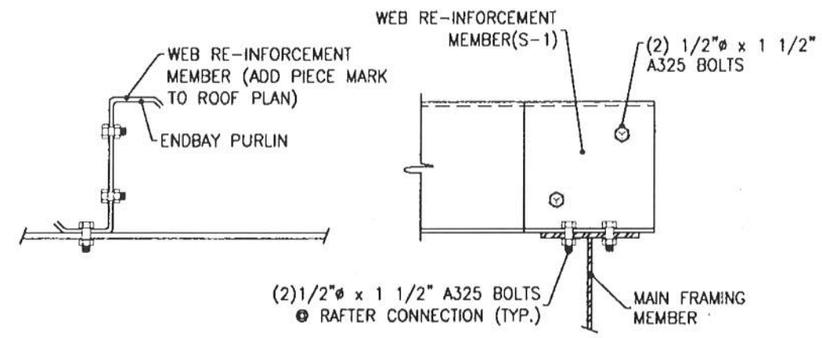

WEB RE-INFORCEMENT CONNECTION

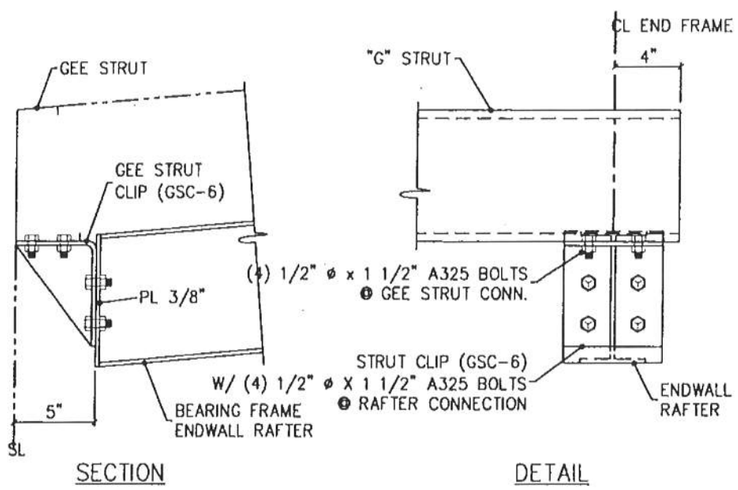

SECTION DETAIL

"G" STRUT CONN. - GSC-6 STRUT CLIP

(@ ENDWALL BEARING FRAME CONNECTION)

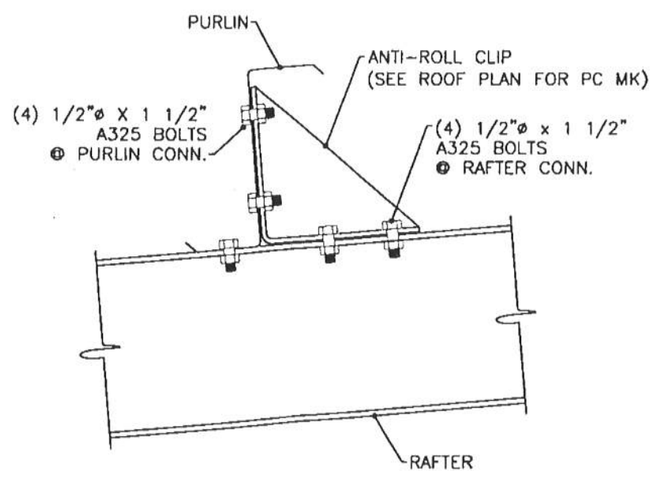

ANTI - ROLL CLIP DETAIL - AR19/AR-49

ERECTOR NOTE:
PIECE MARKS ARE LOCATED ON THE LEFT END OF MEMBER AS DETAILED. ERECT MEMBER SO PIECE MARK IS IN POSITION SHOWN ON ERECTION DRAWINGS.

STATE OF ALASKA 49TH Michael R. Lapierre No. CE10863 3/5/04 REGISTERED PROFESSIONAL ENGINEER

REV.	DATE	DESCRIPTION

REVISIONS

REV.	DATE	DESCRIPTION
1	3/5/04	FOR APPROVAL

REVISIONS

HCI STEEL BUILDING SYSTEMS, INC.

PROJECT:	CENTRAL LANDFILL STORAGE	DRAWN: RH	DATE: 03/03/04	JOB NO.	PAGE:
CUSTOMER:	STEPPERS CONSTRUCTION	CHECK:	DATE:	2499	PEB-9
LOCATION:	PALMER, AK				

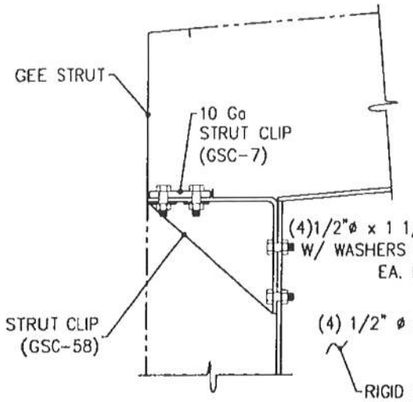

SECTION

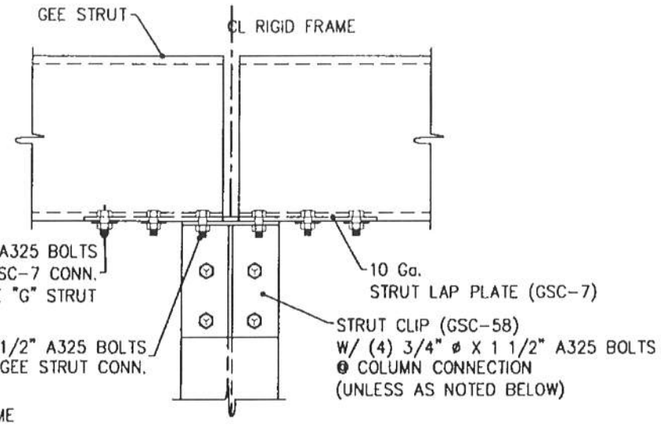

DETAIL

"G" STRUT CONN. - GSC-58 W/ GSC-7 STRUT CLIP

(@ RIGID FRAME CONNECTION)

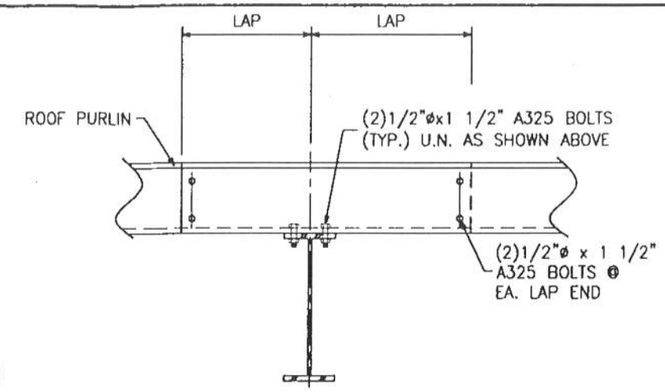

LAPPED PURLIN CONN. DETAIL

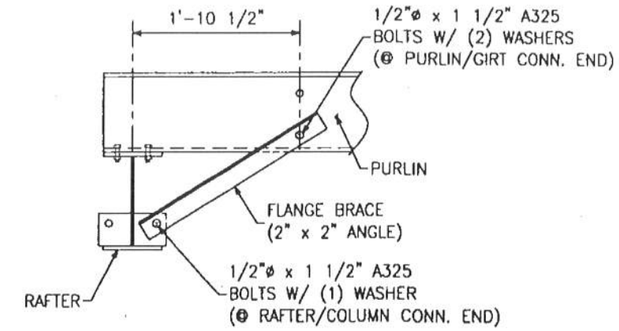

FLANGE BRACE DETAIL

(ENDBAY CONDITION)

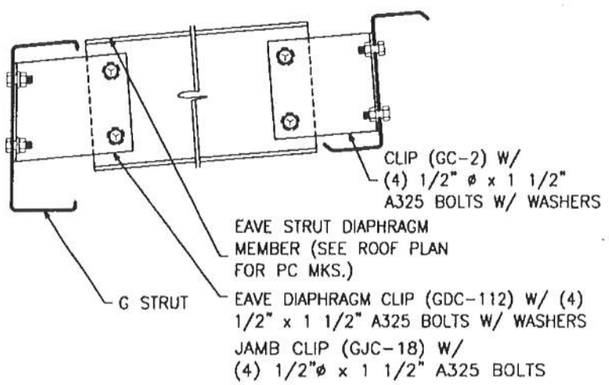

PURLIN EAVE STRUT BLOCKING DETAIL

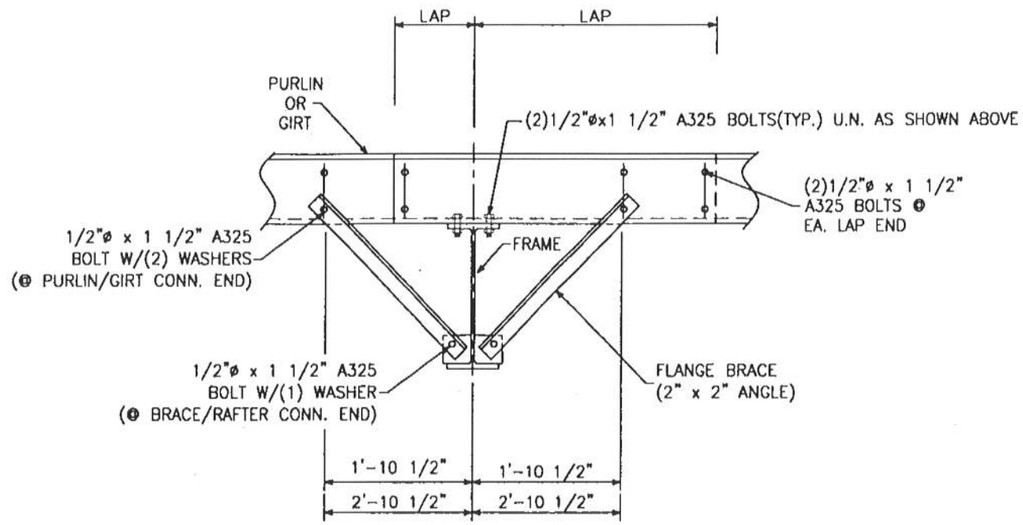

FLANGE BRACE DETAIL

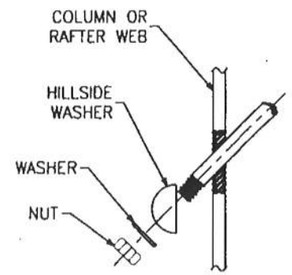

ROD BRACING DETAIL

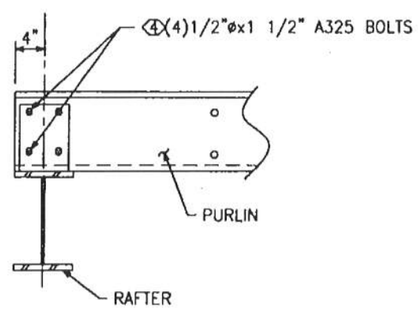

STRUT CONN. DETAIL

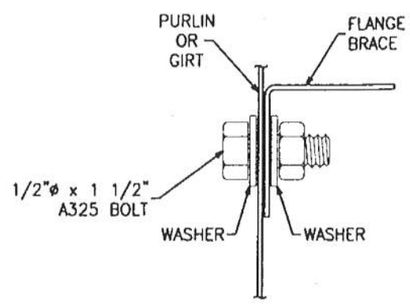

WASHER PLACEMENT DETAIL

(CONNECTION @ PURLIN/GIRT)

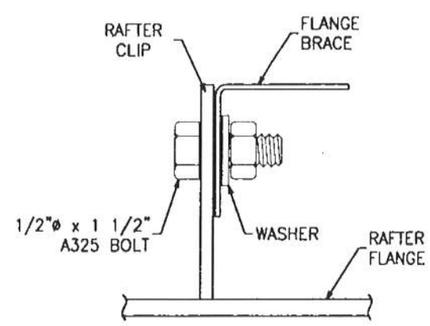

WASHER PLACEMENT DETAIL

(CONNECTION @ RAFTER/COLUMN)

ERECTOR NOTE:
PIECE MARKS ARE LOCATED ON THE LEFT END OF MEMBER AS DETAILED. ERECT MEMBER SO PIECE MARK IS IN POSITION SHOWN ON ERECTION DRAWINGS.

STATE OF ALASKA
49TH
Michael R. Lapierre
No. CE10863
3/5/04
REGISTERED PROFESSIONAL ENGINEER

REV.	DATE	DESCRIPTION
1		
2		

REVISIONS

REV.	DATE	DESCRIPTION
A	3/5/04	FOR APPROVAL

REVISIONS

HCI STEEL BUILDING SYSTEMS INC.

PROJECT:	CENTRAL LANDFILL STORAGE
CUSTOMER:	STEPPERS CONSTRUCTION
LOCATION:	PALMER, AK.

DRAWN:	DATE:	JOB NO.	PAGE:
B.Hin	03/03/04	2499	PEB-10
CHECK:	DATE:		

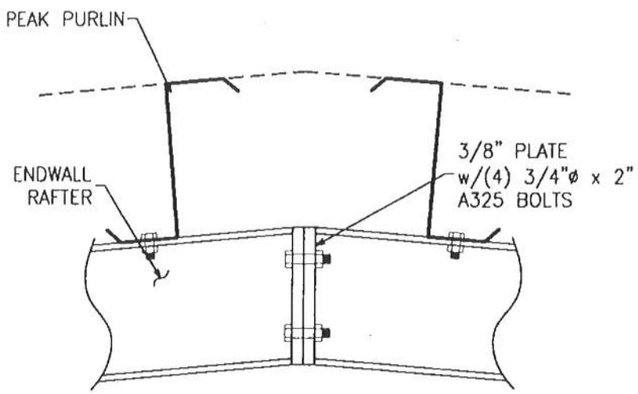

RIDGE CONNECTION
(WITHOUT CENTER COLUMN)

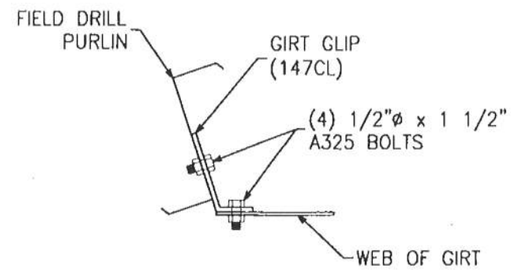

GIRT TO PURLIN CONNECTION

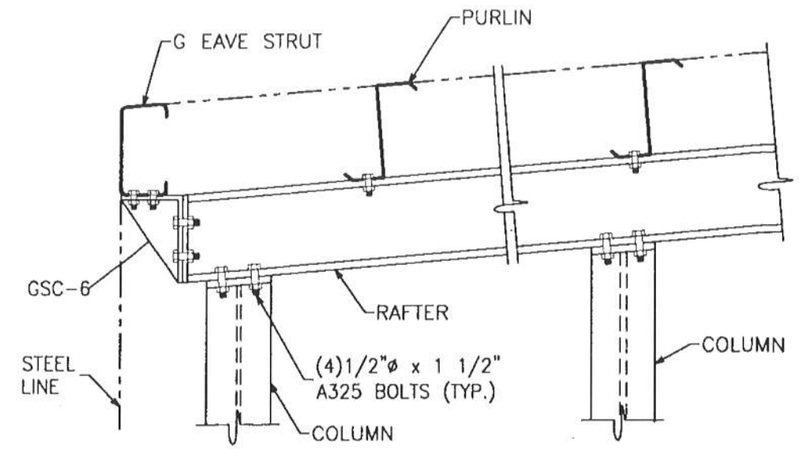

TYPICAL ENDWALL FRAMING DETAIL

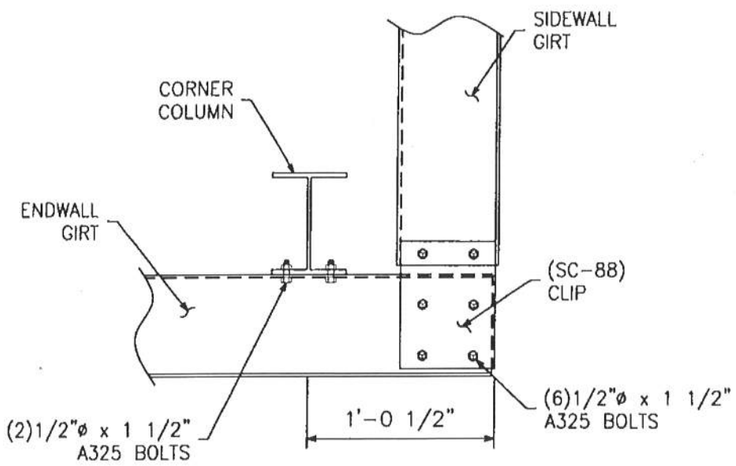

BEARING ENDWALL CORNER
WITH BYPASS ENDWALLS

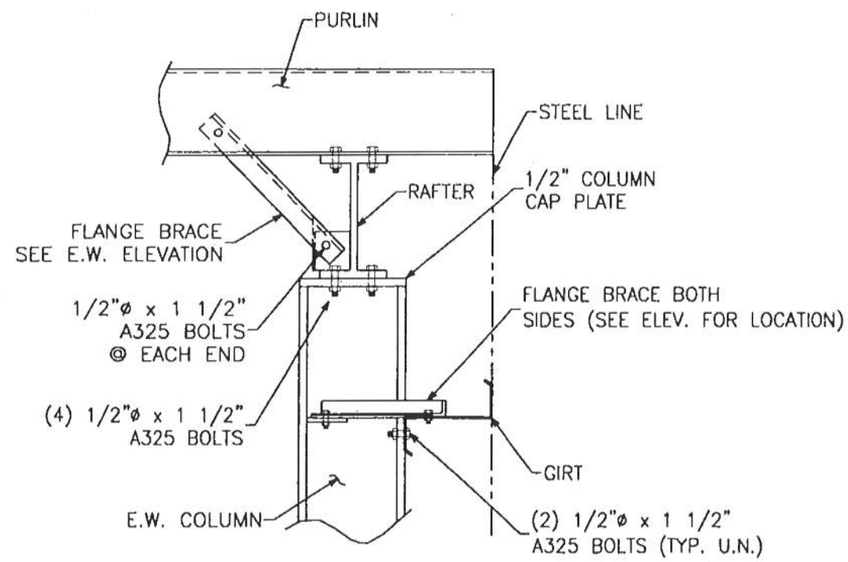

TYPICAL ENDWALL COLUMN CONN.
(BYPASS GIRT CONDITION)

ERECTOR NOTE:
PIECE MARKS ARE LOCATED ON THE LEFT END OF MEMBER AS DETAILED. ERECT MEMBER SO PIECE MARK IS IN POSITION SHOWN ON ERECTION DRAWINGS.

STATE OF ALASKA 49TH Michael R. Lapierre No. CE10863 3/5/04 REGISTERED PROFESSIONAL ENGINEER

REV.	DATE	DESCRIPTION

REVISIONS

REV.	DATE	DESCRIPTION
A	3/5/04	FOR APPROVAL

REVISIONS

HCI STEEL BUILDING SYSTEMS INC.

PROJECT:	CENTRAL LANDFILL STORAGE
CUSTOMER:	STEPPERS CONSTRUCTION
LOCATION:	PALMER, AK.

DRAWN:	DATE:	JOB NO.	PAGE:
R.Hire	03/03/04	2499	PEB-11
CHECK:	DATE:		

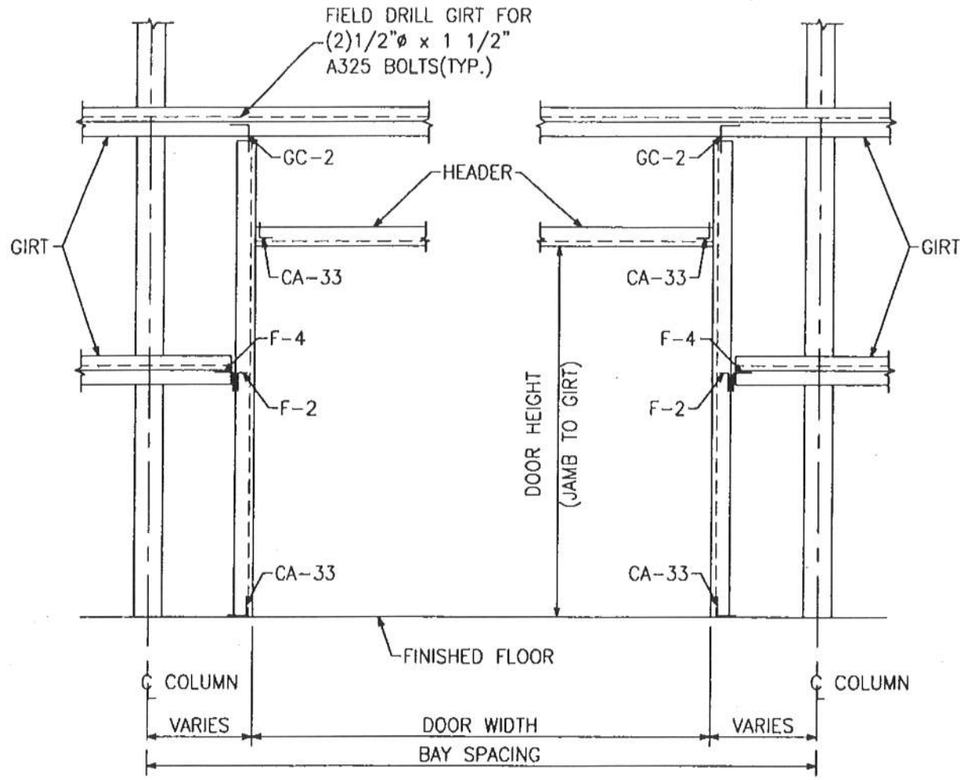

OVERHEAD DOOR FRAME ELEVATION
(BYPASS GIRT)

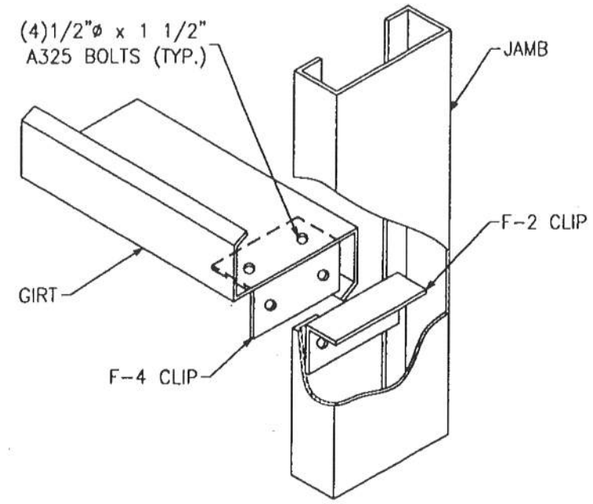

GIRT TO JAMB

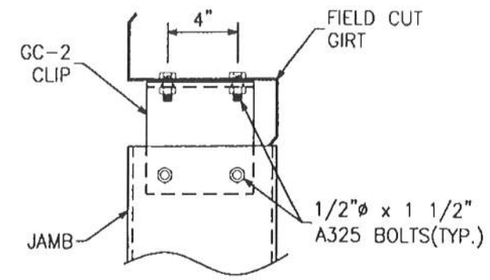

JAMB TO GIRT

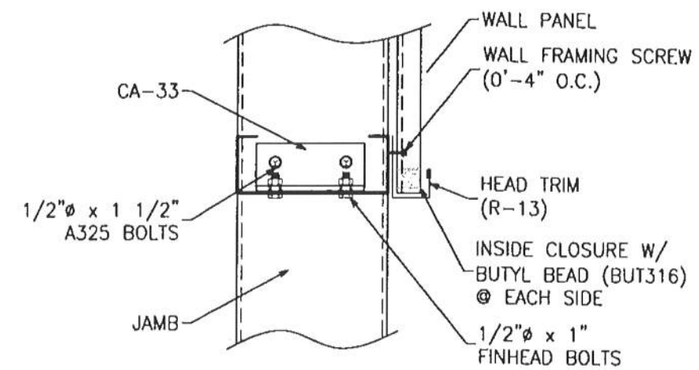

HEADER DETAIL

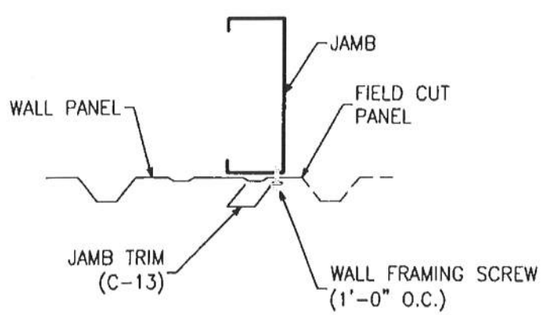

JAMB TRIM AT LOW RIB

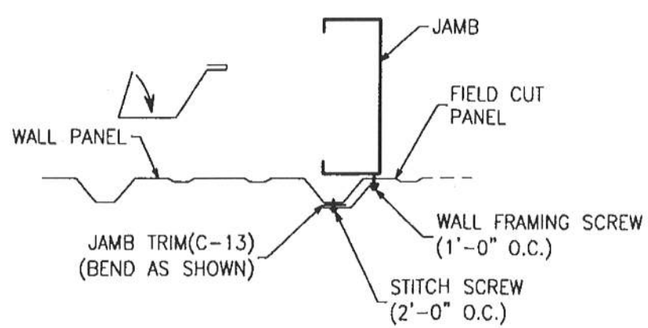

JAMB TRIM AT HI-RIB

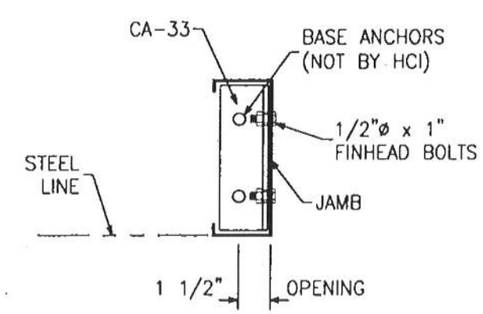

JAMB TO BASE

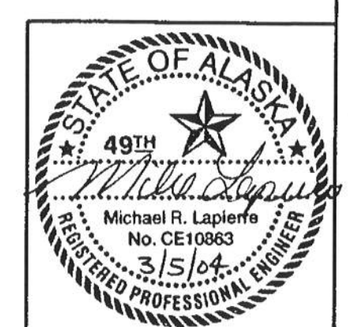

REV.	DATE	DESCRIPTION

REV.	DATE	DESCRIPTION
A	3/5/04	FOR APPROVAL

REVISION BLOCK

HHR/© GIRT/BYPASS GIRT ISSUED 4/14/98 REV.5/4/99

HCI STEEL BUILDING SYSTEMS INC.

PROJECT:	CENTRAL LANDFILL STORAGE	DRAWN: RHir	DATE: 03/03/04	JOB NO. 2499	PAGE: PEB-12
CUSTOMER:	STEPPERS CONSTRUCTION	CHECK:			
LOCATION:	PALMER, AK.				

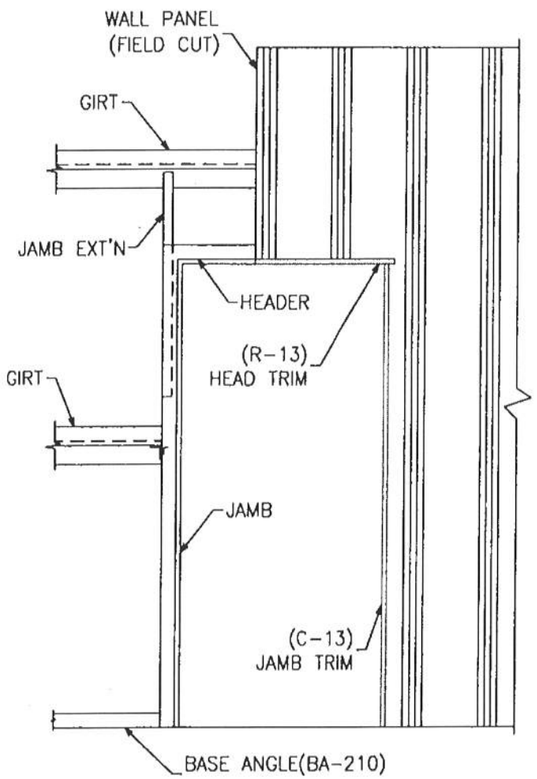

MAN DOOR ELEVATION

(1) REQUIRED

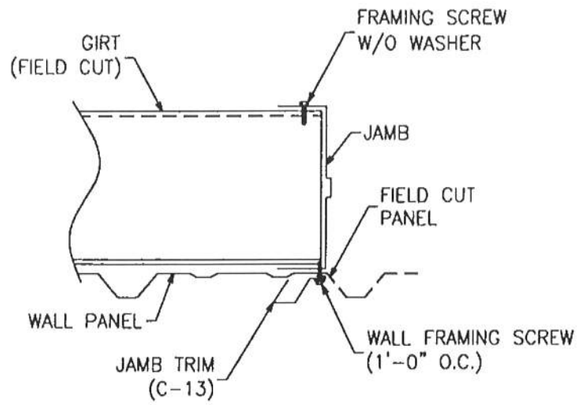

JAMB TRIM AT LOW RIB

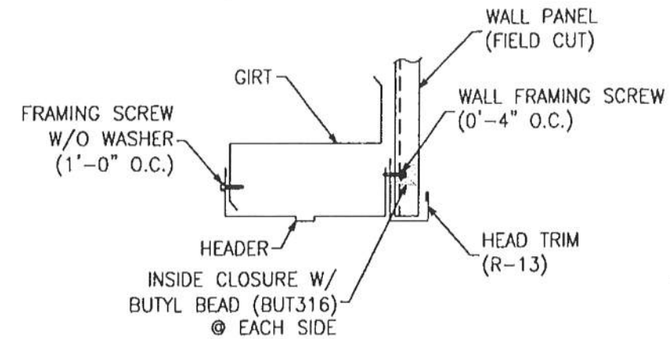

HEADER DETAIL

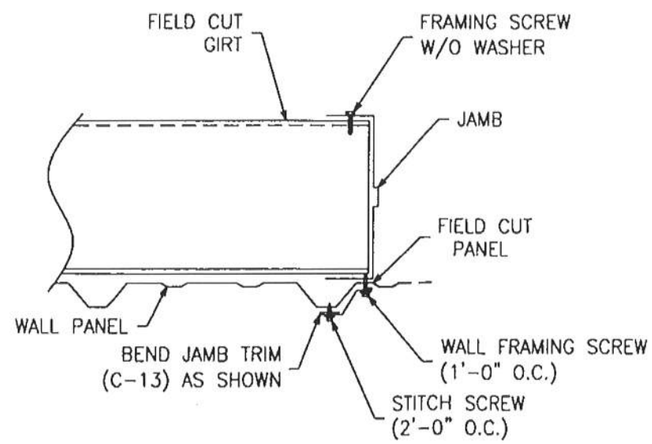

JAMB TRIM AT HI-RIB

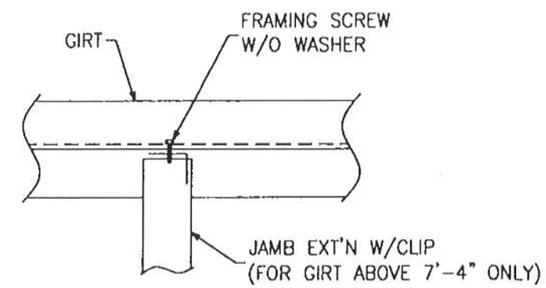

JAMB EXTENSION DETAIL

STATE OF ALASKA
49TH
Michael R. Lapierre
No. CE10863
3/5/04
REGISTERED PROFESSIONAL ENGINEER

REV.	DATE	DESCRIPTION	REV.	DATE	DESCRIPTION
			1	3/5/04	FOR APPROVAL

REVISION BLOCK

3070/STD PKG ISSUED 3/98 REV 5/4/99

HCI STEEL BUILDING SYSTEMS INC.

PROJECT: CENTRAL LANDFILL STORAGE	DRAWN: R. Am	DATE: 03/03/04	JOB NO.	PAGE:
CUSTOMER: STEPPERS CONSTRUCTION	CHECK:		2499	PEB-13
LOCATION: PALMER, AK.				

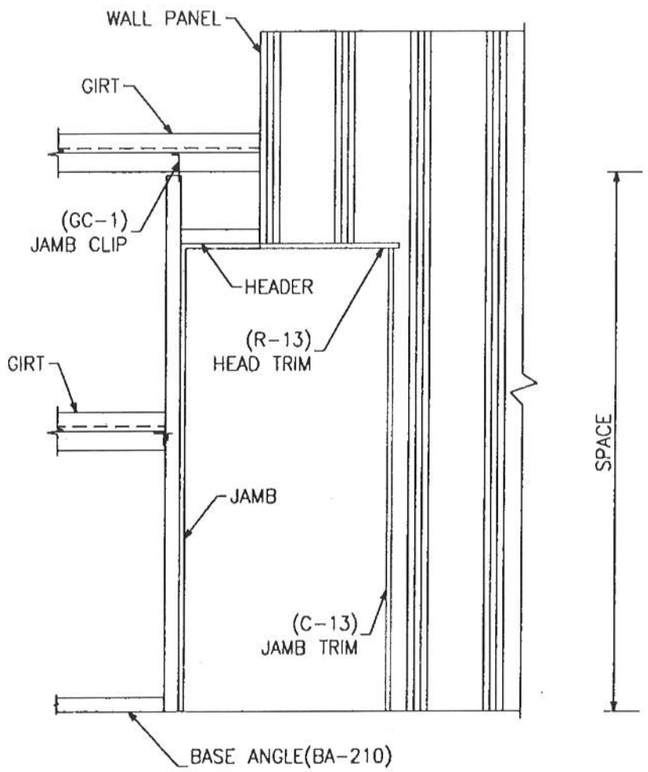

MAN DOOR ELEVATION

(2) REQUIRED

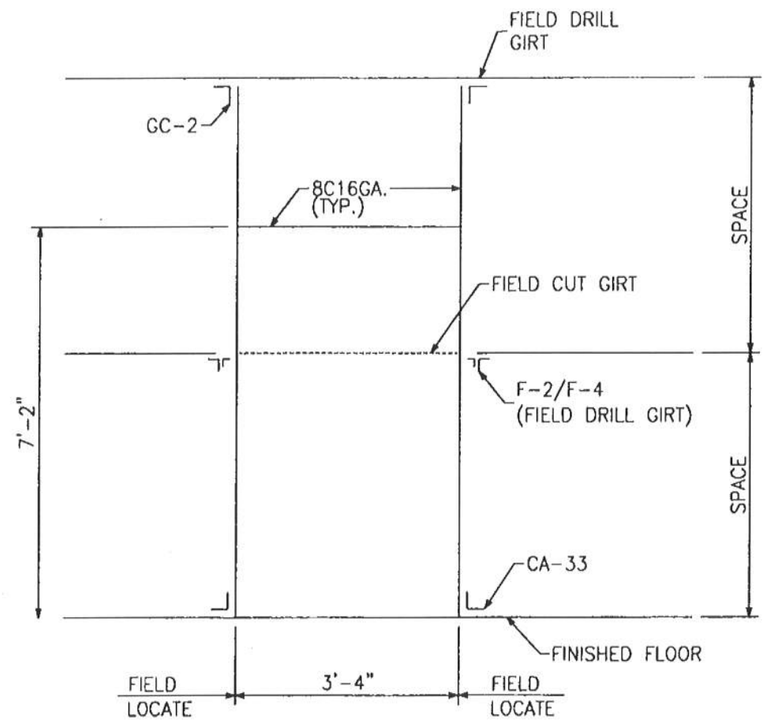

FRAMED OPENING

(3'-4" x 7'-2") (2) REQUIRED

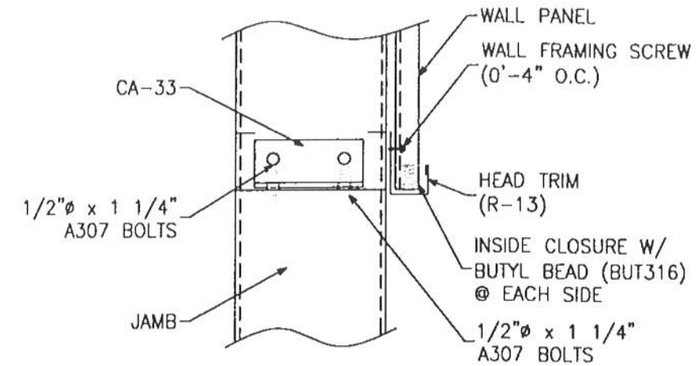

HEADER DETAIL

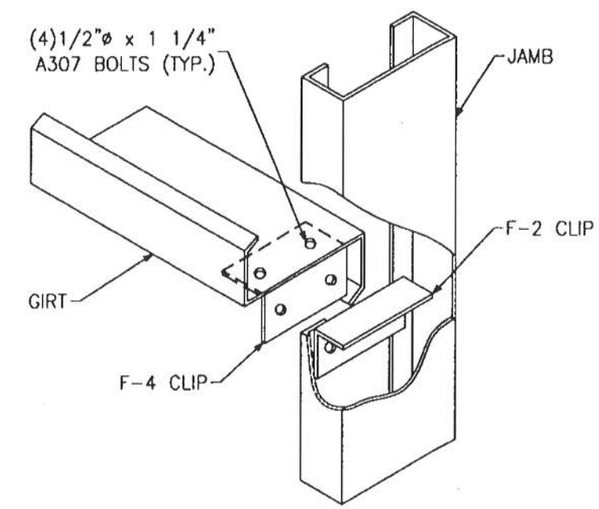

GIRT TO JAMB

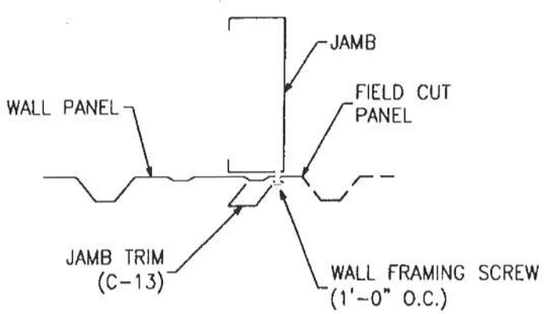

JAMB TRIM AT LOW RIB

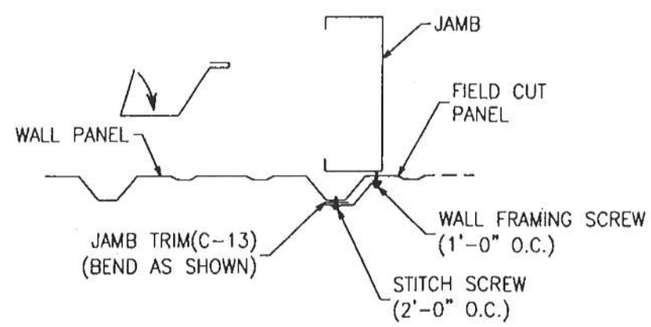

JAMB TRIM AT HI-RIB

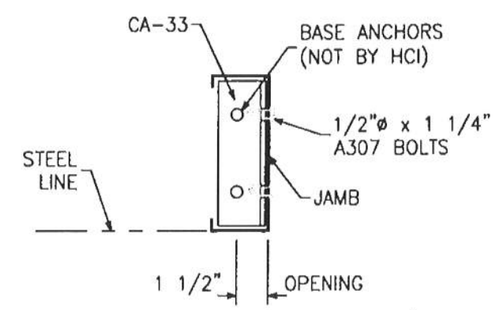

JAMB TO BASE

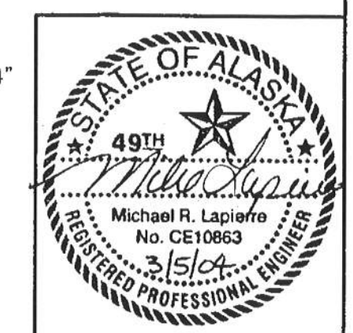

REV.	DATE	DESCRIPTION	REV.	DATE	DESCRIPTION
			A	3/5/04	FOR APPROVAL

REVISION BLOCK

3472/STD.FO DWG. ISSUED 3/98 REV.5/4/99

HCI STEEL BUILDING SYSTEMS INC.

PROJECT:	CENTRAL LANDFILL STORAGE	DRAWN: RHW	DATE: 03/03/04	JOB NO.	PAGE:
CUSTOMER:	STEPPERS CONSTRUCTION	CHECK:		2499	PEB-14
LOCATION:	PALMER, AK.				

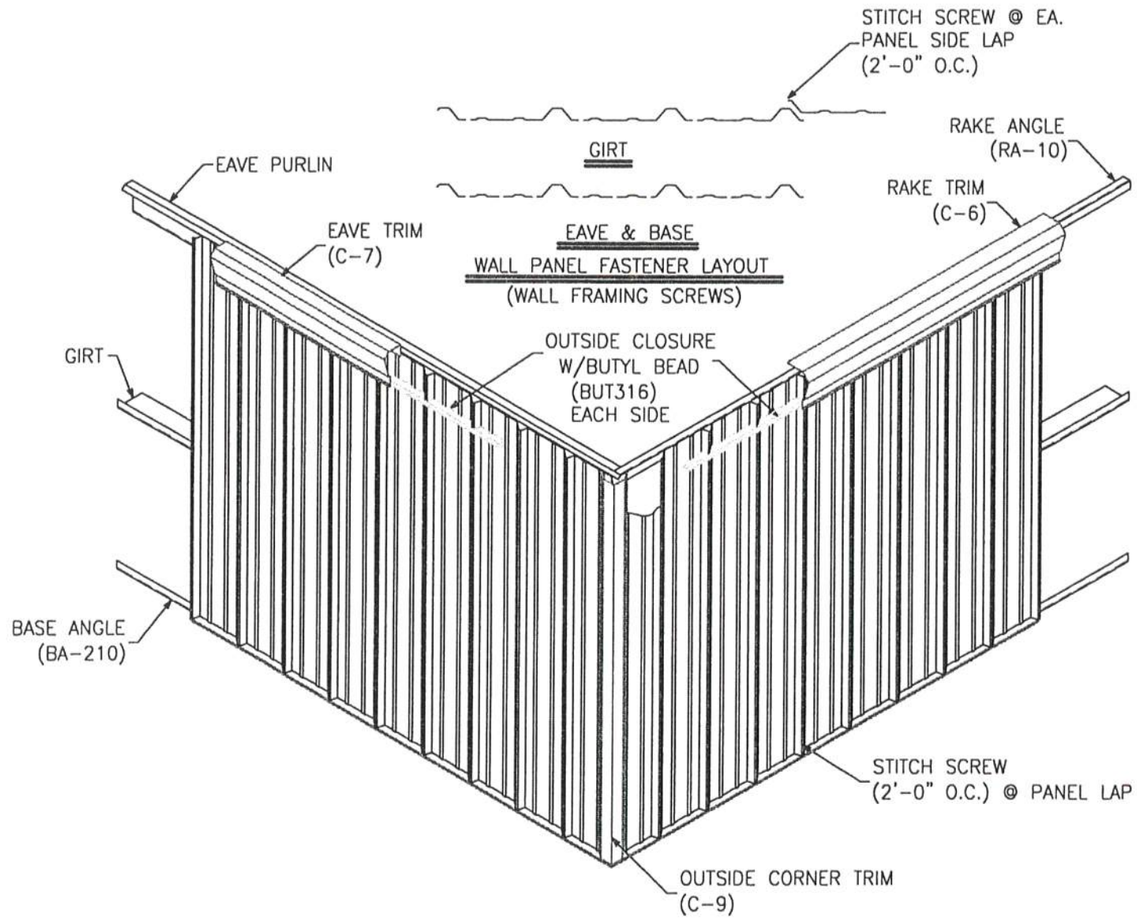

HHR WALL PANEL LAYOUT

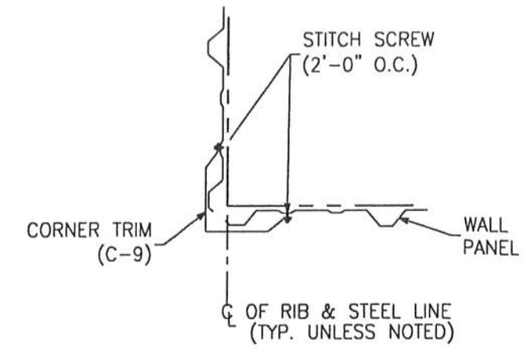

OUTSIDE CORNER TRIM

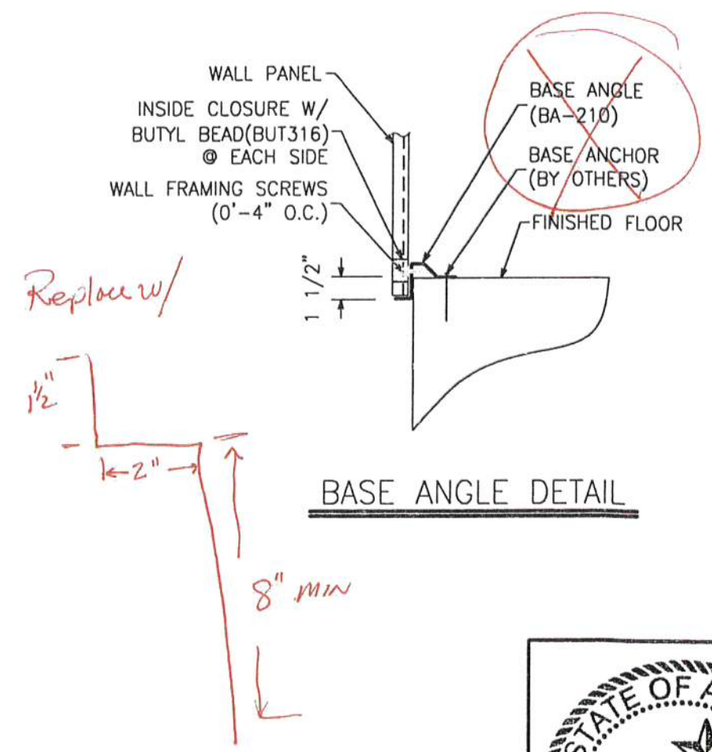

BASE ANGLE DETAIL

STATE OF ALASKA
49TH
Michael R. Lapierre
No. CE10863
3/5/04
REGISTERED PROFESSIONAL ENGINEER

REV.	DATE	DESCRIPTION	REV.	DATE	DESCRIPTION
			A	3/5/04	FOR APPROVAL

HRWALL/STD. DWG. ISSUED 3/98 REV. 5/3/99 — REVISION BLOCK

HCI STEEL BUILDING SYSTEMS INC.

PROJECT:	CENTRAL LANDFILL STORAGE	DRAWN: RHill	DATE: 03/03/04	JOB NO. 2499	PAGE: PEB-15
CUSTOMER:	STEPPERS CONSTRUCTION	CHECK:			
LOCATION:	PALMER, AK.				

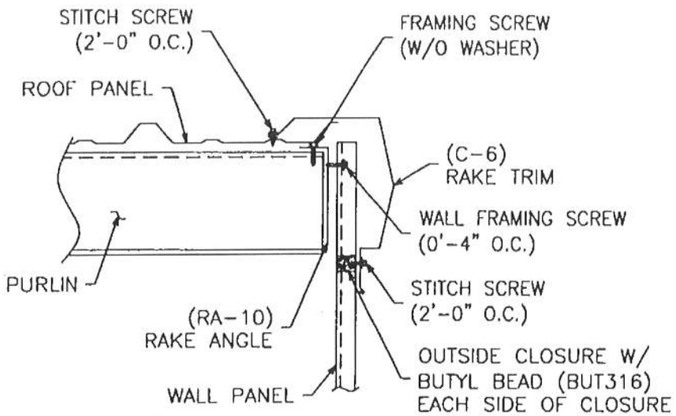

RAKE TRIM DETAIL

ROOF PANEL FASTENER LAYOUT
(ROOF FRAMING SCREWS)

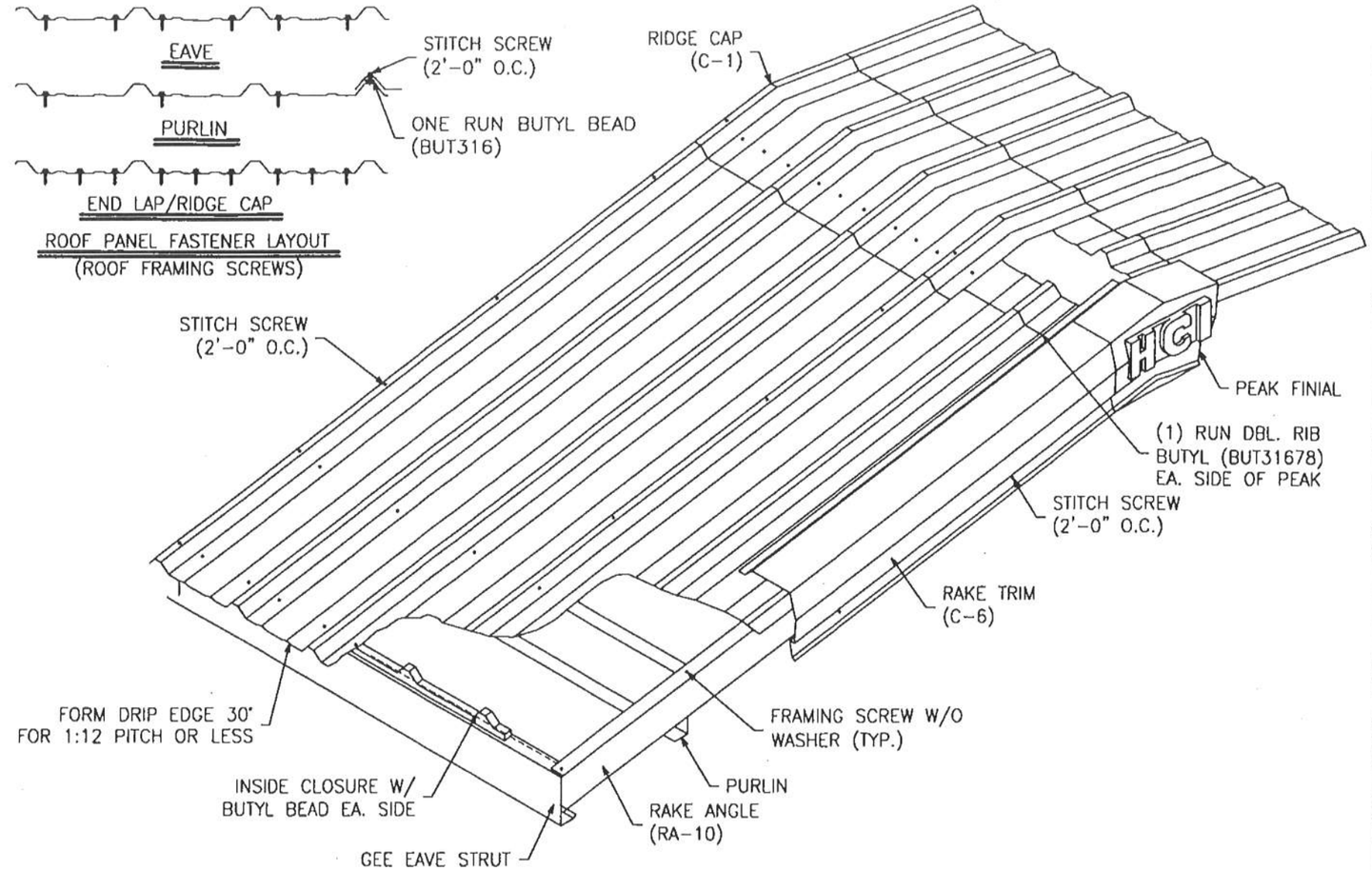

HHR ROOF PANEL LAYOUT

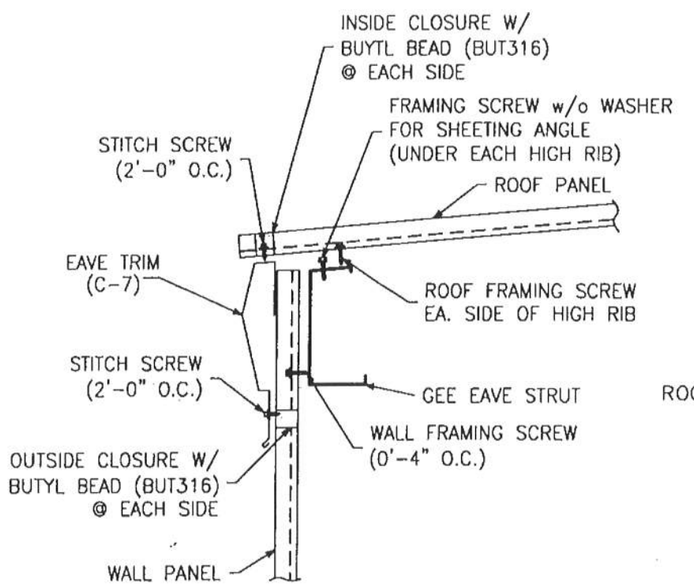

EAVE TRIM DETAIL

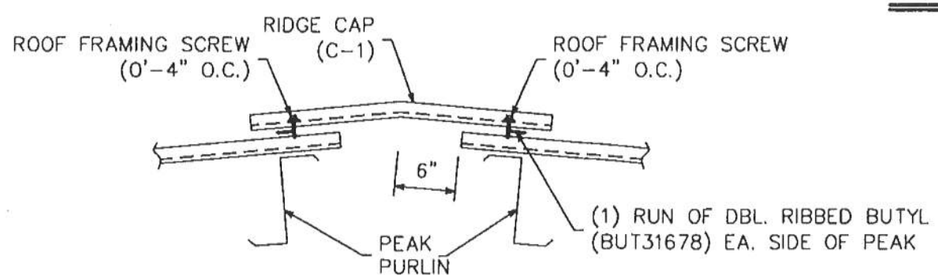

RIDGE CAP DETAIL

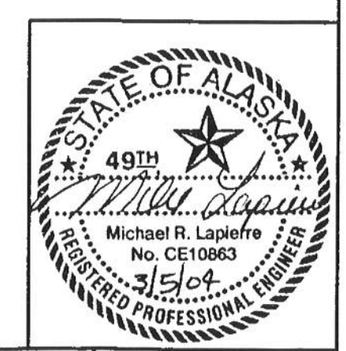

REV.	DATE	DESCRIPTION

REV.	DATE	DESCRIPTION
A	3/5/04	FOR APPROVAL

REVISION BLOCK

HCI STEEL BUILDING SYSTEMS INC.

PROJECT:	CENTRAL LANDFILL STORAGE	DRAWN:	DATE: 03/03/04	JOB NO.	PAGE:
CUSTOMER:	STEPPERS CONSTRUCTION	CHECK:		2499	PEB-16
LOCATION:	PALMER, AK.				