MAT-SU BOROUGH FIRE STATION 6-2

WASILLA, ALASKA

OWNER:
MAT-SU BOROUGH
CAPITAL PROJECTS DEPARTMENT
350 EAST DAHLIA AVE. T. 907.861.7707
PALMER, ALASKA 99645 F. 907.354.5138

CIVIL & STRUCTURAL ENGINEERS:
PND ENGINEERS, INC
1506 WEST 36TH AVENUE T. 907.561.1011
ANCHORAGE, ALASKA 99503 F. 907.563.4220

INTERIOR DESIGN
INTERIOR SOLUTIONS GROUP
1663 GRAND RIDGE ROAD T. 907.229.0796
SAN TAN VALLEY, ARIZONA 85140

ARCHITECT:
BURKHART CROFT ARCHITECTS, LLC
880 N STREET, SUITE 302 T. 907.929.9334
ANCHORAGE, ALASKA 99501 F. 907.929.9335

MECHANICAL & ELECTRICAL ENGINEERS:
HZA ENGINEERING, LLC
113 W. NORTHERN LIGHTS BLVD., SUITE 240 T. 907.562.1012
ANCHORAGE, ALASKA 99503 F. 907.562.1013

STATE OF ALASKA 49TH
DAVE JAMES DREHER
A-14794
Registered Professional Architect
5/9/18

Burkhart Croft ARCHITECTS LLC
880 N Street Suite 302 | Anchorage Alaska 99501
T: 907.929.9334 | www.burkhart-croft.com

MATANUSKA-SUSITNA BOROUGH
MSB FIRE STATION 6-2
WASILLA, ALASKA

DATE: 5/9/2018
DRAWN: JKJ
CHECKED: JBC
PROJECT: 1725
DRAWING TITLE:
PROJECT DATA
REVISIONS:
SHEET NO:
G1.1

INDEX TO DRAWINGS

GENERAL

G1.1	PROJECT DATA
G1.2	DRAWING INDEX
G1.3	ABBREVIATIONS, SYMBOLS, GEN. NOTES & CODE SUMMARY
G1.4	FIRE RATED AND FULL HEIGHT WALLS
G1.5	OCCUPANT LOAD PLAN
G1.6	OCCUPANT LOAD PLAN
G1.7	WALL ROOF AND FLOOR ASSEMBLIES

CIVIL

C0.1	DEMOLITION
C1.1	SITE PLAN
C1.2	GRADING PLAN
C1.3	GRADINGPLAN
C1.4	GRADING PLAN
C1.5	FENCE GATE PLAN
C1.6	SITE LAYOUT PLAN
C1.7	SITE LAYOUT PLAN
C2.0	UTILITY OVERVIEW
C2.1	WATERLINE 1 PLAN & PROFILE
C2.2	WATERLINE 2 PLAN & PROFILE
C2.3	WATERLINE 3 PLAN & PROFILE
C2.4	WATERLINE 4 PLAN & PROFILE
C2.5	WATERLINE 4 PLAN & PROFILE
C3.1	SEWER PLAN AND PROFILE
C4.1	DETAILS
C4.2	DETAILS
C4.3	DETAILS
C4.4	DETAILS
C4.5	DETAILS
C4.6	SEPTIC DETAILS
C4.7	WATER DETAILS

ARCHITECTURAL

A2.1	REFERENCE FLOOR PLAN
A2.2	AREA A FLOOR PLAN
A2.3	AREA B FLOOR PLAN
A2.4	AREA C FLOOR PLAN
A2.5	MEZZANINE, ROOF ACCESS AND PUMP ROOM
A2.6	FIRST FLOOR REFERENCE REFLECTED CEILING PLAN
A2.7	AREA A REFLECTED CEILING PLAN
A2.8	AREA B REFLECTED CEILING PLAN
A2.9	AREA C REFLECTED CEILING PLAN
A2.10	ENLARGED PLANS
A2.11	ENLARGED PLANS
A2.12	ENLARGED PLANS
A2.13	ROOF PLAN
A3.1	EXTERIOR ELEVATIONS
A3.2	EXTERIOR ELEVATIONS
A3.3	BUILDING SECTIONS
A3.4	BUILDING SECTIONS
A3.5	BUILDING SECTIONS
A3.6	WALL SECTIONS
A3.7	WALL SECTIONS
A3.8	WALL SECTIONS
A3.9	WALL SECTIONS
A3.10	WALL SECTIONS
A4.1	INTERIOR ELEVATIONS
A4.2	INTERIOR ELEVATIONS
A4.3	INTERIOR ELEVATIONS
A4.4	INTERIOR ELEVATIONS
A4.5	INTERIOR ELEVATIONS
A4.6	INTERIOR ELEVATIONS DISPLAY CASE
A4.7	INTERIOR ELEVATIONS
A4.8	INTERIOR ELEVATIONS
A4.9	INTERIOR ELEVATIONS
A4.10	INTERIOR ELEVATIONS
A4.11	INTERIOR ELEVATIONS
A5.1	ROOM FINISH SCHEDULE
A5.2	ROOM FINISH LEGEND
A5.3	DOOR SCHEDULE
A5.4	WINDOW AND STOREFRONT TYPES
A5.5	COLORED FLOOR FINISH PLAN
A6.1	TYPICAL ELEVATION DETAIL CALLOUTS
A6.2	EXTERIOR DETAILS
A6.3	EXTERIOR DETAILS
A6.4	EXTERIOR DETAILS
A6.5	EXTERIOR DETAILS
A6.6	EXTERIOR DETAILS
A7.1	INTERIOR DETAILS
A7.2	LARGE DISPLAY CASE ELEVATION AND SECTIONS
A7.3	DISPLAY CASE AND INTERIOR DETAILS
A8.1	STAIR PLANS
A8.2	STAIR SECTIONS AND DETAILS
A8.3	STAIR AND RAMP DETAILS
A8.4	RAMP ELEVATIONS
A8.5	GUARDRAIL DETAILS
A8.6	LADDER AND GUARDRAIL DETAILS
A8.7	LADDER AND SHIPS LADDER DETAILS
A8.8	LADDER DETAILS

STRUCTURAL

S1.0	DESIGN CRITERIA
S1.1	SPECIAL INSPECTIONS
S1.2	SPECIAL INSPECTIONS OF STEEL
S1.3	SPECIAL INSPECTIONS OF SEISMIC RESISTING SYSTEMS
S1.4	CONCRETE REINFORCING SCHEDULES AND TYPICAL DETAILS
S1.5	CONCRETE PIER PLANS
S1.6	MASONRY SCHEDULES AND TYPICAL DETAILS
S1.7	STEEL COLUMN BASE PLATES
S1.8	STRUCTURAL STEEL SCHEDULES AND TYPICAL DETAILS
S1.9	STEEL MOMENT FRAME SCHEDULE AND TYPICAL DETAILS
S1.10	STEEL JOIST SCHEDULES AND TYPICAL DETAILS
S1.11	STEEL DECK SCHEDULES AND TYPICAL DETAILS
S2.0	TANK FOUNDATION PLAN AND SECTIONS
S2.1	FOUNDATION PLAN
S2.2	SLAB PLAN
S2.3	MEZZ FLOOR AND LOW ROOF FRAMING PLAN
S2.4	HIGH ROOF FRAMING PLAN
S2.5	CONTROL ROOM ROOF FRAMING
S3.0	CMU WALL ELEVATIONS
S3.1	CMU WALL ELEVATIONS
S3.2	FRAME ELEVATIONS
S3.3	FRAME ELEVATIONS
S3.4	FRAME ELEVATIONS
S3.5	FRAME ELEVATIONS
S3.6	TYPICAL BRACE FRAME CONNECTIONS
S3.7	TYPICAL BRACE FRAME CONNECTIONS
S4.1	WATER TANK SECTIONS AND DETAILS
S4.2	FOUNDATION DETAILS
S5.1	LOW ROOF SECTIONS
S5.2	LOW ROOF AND MEZZANINE SECTIONS
S5.3	LOW ROOF SECTIONS
S6.1	HIGH ROOF FRAMING DETAILS
S6.2	HIGH ROOF FRAMING DETAILS
S7.1	STAIR FRAMING PLANS & DETAILS

MECHANICAL

M0.1	LEGEND AND SCHEDULES
M0.2	ABBREVIATIONS AND SCHEDULES
M0.3	SCHEDULES
M0.4	SCHEDULES
M0.5	SPECIFICATIONS & SEQUENCE OF OPERATIONS
M0.6	SEQUENCE OF OPERATIONS
M0.7	SEQUENCE OF OPERATIONS
M1.1	UNDERFLOOR PLUMBING PLAN - AREA A
M1.2	UNDERFLOOR PLUMBING PLAN - AREA B
M1.3	UNDERFLOOR PLUMBING PLAN - AREA C
M1.4	FIRST FLOOR PLUMBING PLAN - AREA A
M1.5	FIRST FLOOR PLUMBING PLAN - AREA B
M1.6	FIRST FLOOR PLUMBING PLAN - AREA C
M1.7	MEZZANINE, CONTROL, AND PUMP ROOM PLUMBING PLANS
M2.1	FIRST FLOOR HEATING PLAN - AREA A
M2.2	FIRST FLOOR HEATING PLAN - AREA B
M2.3	FIRST FLOOR HEATING PLAN - AREA C
M2.4	MEZZANINE, CONTROL, AND PUMP ROOM HEATING PLANS
M2.5	SNOWMELT PLAN
M3.1	FIRST FLOOR VENTILATION PLAN - AREA A
M3.2	FIRST FLOOR VENTILATION PLAN - AREA B
M3.3	FIRST FLOOR VENTILATION PLAN - AREA C
M3.4	MEZZANINE, CONTROL, AND PUMP ROOM VENTILATION PLANS
M4.1	MECHANICAL ROOF PLAN
M5.1	MECHANICAL ROOM PLAN
M5.2	ENLARGED PLUMBING PLANS
M5.3	ENLARGED PLUMBING PLANS
M6.1	MECHANICAL SECTIONS
M6.2	MECHANICAL SECTIONS
M7.1	MECHANICAL DIAGRAMS
M7.2	MECHANICAL DIAGRAMS
M8.1	MECHANICAL DETAILS
M8.2	MECHANICAL DETAILS
M8.3	MECHANICAL DETAILS

ELECTRICAL

E0.1	ELECTRICAL LEGEND
E0.2	FIXTURE SCHEDULE
E0.3	SPECIFICATIONS
E1.1	ELECTRICAL SITE PLAN
E1.2	ELECTRICAL AREA CLASSIFICATION PLAN
E2.1	LIGHTING PLAN - AREA A
E2.2	LIGHTING PLAN - AREA B
E2.3	LIGHTING PLAN - AREA C
E2.4	MEZZANINE, PUMP ROOM, AND STAIR LANDING LIGHTING PLANS
E3.1	POWER PLAN - AREA A
E3.2	POWER PLAN - AREA B
E3.3	POWER PLAN - AREA C
E3.4	MEZZANINE, PUMP ROOM, AND STAIR LANDING POWER PLANS
E3.5	ENLARGED PLANS
E4.1	RISER DIAGRAM
E5.1	SINGLE LINE DIAGRAM
E5.2	PANEL SCHEDULES
E5.3	PANEL SCHEDULES
E5.4	PANEL SCHEDULES

STATE OF ALASKA 49TH DAVE JAMES DREHER A-14794 Registered Professional Architect
5/9/18

Burkhart Croft ARCHITECTS LLC
880 N Street Suite 302 | Anchorage Alaska 99501
T: 907.929.9334 | www.burkhart-croft.com

MATANUSKA-SUSITNA BOROUGH

MSB FIRE STATION 6-2

WASILLA, ALASKA

DATE: 5/9/2018

DRAWN: TOS

CHECKED: DJD

PROJECT: 1725

DRAWING TITLE:
DRAWING INDEX

REVISIONS:

SHEET NO:

G1.2

ABBREVIATIONS

NOT ALL ABBREVIATIONS INDICATED MAY BE USED IN THESE CONSTRUCTION DOCUMENTS. SEE CIVIL, STRUCTURAL, MECHANICAL & ELECTRICAL FOR ABBREVIATIONS SPECIFIC TO THOSE DISCIPLINES.

&	and
L	angle
@	at
C	centerline
O	diameter
#	pound or number
AB	anchor bolt
ABBR	abbreviation
AC	air compressor
ACT	acoustical tile
ADD'L	additional
ADH	adhesive
ADJ	adjustable
AFF	above finished floor
ALUM	aluminum
AP	access panel
APPROX	approximate
ARCH	architectural
BCT	baby chaning table
BD	board
BLDG	building
BLK	block or blocking
BM	beam
BO	bottom of
BTW	between
BW	blinds at window
CAB	cabinet
CB	catch basin
CG	corner guard
CJ	control joint
CLG	ceiling
CMU	concrete masonry unit
COL	column
CONC	concessions
CONST	construction
CONT	continue, continuous
CORR	corridor
CPT	carpet
CT	ceramic tile
D	dryer
D	depth
DEMO	demolition
DET	detail
DF	drinking fountain
DIA	diameter
DIM	dimension
DISP	dispenser
DN	down
DS	downspout
DWG	drawing
(E)	existing
EA	each
EL	elevation
ELEC	electrical
EP	electrical panel
EQ	equal
EQUIP	equipment
EXT	extend, or exterior
EXIST	existing
EXP	expansion
EXST'G	existing
FCO	floor clean out
FD	floor drain
FE	fire extinguisher
FEC	fire extinguisher cabinet
FF	factory finish
FHC	fire hose cabinet
FL	floor
FOF	face of finish
FOS	face of stud
FRP	fiberglass reinforced panel
FT	feet
FOT	fuel oil tank
FURN	furnace
FURR	furring
FV	feild verify
GA	gauge or gage
GALV	galvanized
GB	grab bar
GL	glass or glazing
GLBM	glu-lam beam
GR	grid
GWB	gypsum wall board
HB	hose bibb
HBFP	hose bibb, frost proof
HC	handicapped
HDWE	hardware
HM	hollow metal
HORIZ	horizontal
HT	height
HVAC	heating, ventilating, and air conditioning
HWH	hot water heater
IHM	insulated hollow metal
INSUL	insulation
INT	interior
JAN	janitor
JT	joint
LAV	lavatory
LFT	lineal feet
MAX	maximum
MB	markerboard
MECH	mechanical
MFR	manufacturer
MIN	minimum, minute
MISC	miscellaneous
MR	mop rack
MTD	mounted
MTL	metal
MWP	metal wall panel
(N)	new
NFS	non-frost susceptible
NIC	not in contract
NO	number
NOM	nominal
NTS	not to scale
OD	overflow drain
OFCI	owner furnished, contractor installed
OFF	office
OFOI	owner furnished, owner installed
OPH	opposite hand
OSB	oriented strand board
OS	overflow scupper
PJ	panel joint
PL	plate
P. LAM	plastic laminate
PLYWD	plywood
PNT	paint
PT	pressure treated
PTD	paper towel dispenser
PTD/R	paper towel dispenser / receptacle
PTR	paper towel receptacle
QT	quarry tile
RAD	radius
RD	roof drain
REF	refrigerator
REQ	required
REQM'TS	requirements
RM	room
RO	rough opening
R&S	rod and shelf
SB	smart board
SD	soap dispenser
SECT	section
SHR	shower
SIM	similar
SND	sanitary napkin dispenser
SNR	sanitary napkin receptacle
SPEC	specification
SQ	square
STRG	storage
STRUCT	structural
SUSP	suspended
S.V.	sheet vinyl
TB	tack board
TBS	to be selected
TD	trench drain
TEL	telephone
T.O.	top of
TTD	toilet tissue dispenser
TWR	tower
TYP	typical
U.N.O.	unless noted otherwise
VAR	varies
VB	vapor barrier
VERT	vertical
VEST	vestibule
VTR	vent through roof
W/	with
WB	white board or weather barrier
WC	water closet
WD	wood
WR	water resistant
WSCT	wainscot

SYMBOLS

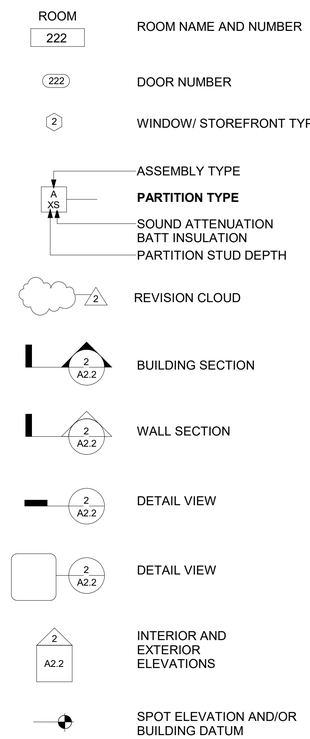

2012 INTERNATIONAL BUILDING CODE SUMMARY

CONSTRUCTION TYPE: IIB (WITH AUTOMATIC SPRINKLER SYSTEM PROTECTION)
TWO STORY WITH MEZZANINE CONFIGURATION

OCCUPANCY: GROUP R-2 (DORMITORY): DORMITORY WING
GROUP S-2 (ENCLOSED PARKING): APPARATUS BAYS
GROUP B (BUSINESS): ALL OTHER SPACES

TABLE 503: NON-SEPARATED USES, PER 508.3.2. GROUP R-2 IS MOST RESTRICTIVE FOR BUILDING AREA.

TYPE IIB / GROUP R-2: BASIC ALLOWABLE AREA = 16,000 SF

HEIGHT LIMITATION: 4-STORIES OR 55 FEET (BUILDING IS 2-STORIES AND 36-FEET)

SECTION 506.1: TABULAR AREA PER FLOOR:

At = 16,000 SF PER TABLE 503

Aa= [At+ (At*If) + (At*Is)]

Aa= [(16,000 + (16,000*.75) + (16,000*2)]

Aa= 16,000 + 12,000 + 32,000 = 60,000 SF (LARGEST SINGLE STORY)

SECTION 506.2: TOTAL ALLOWABLE AREA = 120,000 SF (FOR TOTAL BUILDING)

SECTION 506.3: FRONTAGE INCREASE:

If = [F/P – 0.25] * W/30
If = [1-0.25] * 30/30
If = 0.75

ACTUAL AREA: ACTUAL FLOOR AREA

FIRST FLOOR:	36,888 SF
MEZZANINE:	1,860 SF
SECOND FLOOR:	478 SF
TOTAL WITH MEZZ.	39,226 SF
TOTAL WITHOUT MEZZ.	37,366 SF

LARGEST SINGLE STORY: 36,888 SF < 60,000 SF PERMITTED

ACTUAL HEIGHT: 36'-0" < 55' PERMITTED

TABLE 509: INCIDENTAL USE: BOILER ROOMS: WHERE ANY PIECE OF EQUIPMENT IS OVER 400,000 BTU PER HOUR INPUT, 1-HOUR SEPARATION OR AUTOMATIC FIRE-EXTINGUISHING SYSTEM IS REQUIRED. BUILDING IS FULLY SPRINKLED, THEREFORE NO SEPARATION IS REQUIRED. SELF-CLOSING DEVICE AND SMOKE SEAL REQ'D AT ALL DOOR OPENINGS, TYP.

LAUNDRY ROOMS IN EXCESS OF 100 SF: 1-HR SEPARATION OR AUTOMATIC FIRE-EXTINGUISHING SYSTEM IS REQUIRED. BUILDING IS FULLY SPRINKLED, THEREFORE NO SEPARATION IS REQUIRED. CONSTRUCTION REQUIRED TO RESIST THE PASSAGE OF SMOKE.

TABLE 601: FIRE-RESISTANCE RATING:
NO FIRE-RESISTANCE REQUIRED IN TYPE IIB FOR STRUCTURAL FRAME, BEARING WALLS, FLOOR OR ROOF CONSTRUCTION.

TABLE 602: ALL EXTERIOR WALLS ARE GREATER THAN 10 FEET FROM PROPERTY LINES OR ASSUMED PROPERTY LINES. FOR GROUPS R-2, S-2 AND B IN TYPE IIB, NO RATING OF EXTERIOR WALLS IS REQUIRED.

TABLE 705.8: EXTERIOR OPENINGS:
ALL EXTERIOR WALLS HAVE > 30 FEET FIRE SEPARATION DISTANCE. AMOUNT OF UNPROTECTED OPENINGS IS UNLIMITED.

SECTION 709 DWELLING UNIT SEPARATION:
1-HR FIRE-RESISTIVE FIRE PARTITIONS ARE REQUIRED FOR ALL WALLS SEPARATING SLEEPING UNITS.

SECTION 1016.1: MAXIMUM TRAVEL DISTANCE: 250 FEET

TABLE 1018.1: CORRIDORS SERVING OCCUPANT LOAD GREATER THAN 10, IN GROUP R EQUIPPED WITH SPRINKLER SYSTEM, MUST BE 0.5-HR FIRE-RESISTIVE RATED.

SECTION 1018.4 CORRIDOR DEAD ENDS: PER EXCEPTION 2, CORRIDORS IN SPRINKLED GROUP R-2 OCCUPANCIES MAY HAVE DEAD END CORRIDORS NOT EXCEEDING 50 FEET.

SECTION 2406.4 SAFETY GLAZING REQ'D AT ALL LOCATIONS SUBJECT TO HUMAN IMPACT.

GENERAL NOTES

1. ALL DIMENSIONS ARE TO FACE OF STUD UNLESS NOTED OTHERWISE.
2. ALL VERT FLOOR DATUM ELEVATIONS ARE TO TOP OF CONCRETE SLAB. ALL VERT. ROOF DATUM ELEVATIONS ARE TO BOTTOM OF ROOF DECK - UNLESS OTHERWISE NOTED.
3. DOOR AND RELITE ROUGH-OPENINGS SHALL BE LOCATED 4" FROM FACE OF ADJACENT WALLS, UNLESS NOTED OTHERWISE.
4. PROVIDE BLOCKING AT ALL WALL MOUNTED PANELS, EQUIPMENT, AND OTHER ACCESSORIES.
5. PROVIDE ACOUSTICAL SEALANT AT ALL PENETRATIONS THROUGH WALLS DENOTED TO HAVE SOUND ATTENUATION BATTS. USE FIRE PENETRATION SEALANT AT ALL PENETRATIONS THROUGH FIRE RATED ASSEMBLIES.
6. AT DESIGNATED FE & FEC LOCATIONS, PROVIDE UL RATED 2-A:10-B:C, 5-LB CAPACITY DRY CHEMICAL EXTINGUISHERS.
7. ALL FLOORS SLOPING TO FLOOR DRAINS SHALL HAVE A SLOPE OF 1/8" PER FOOT U.N.O.

STATE OF ALASKA 49TH
DAVE JAMES DREHER
A-14794
Registered Professional Architect
5/9/18

Burkhart Croft
ARCHITECTS LLC
880 N Street Suite 302 | Anchorage Alaska 99501
T: 907.929.9334 | www.burkhart-croft.com

MATANUSKA-SUSITNA BOROUGH
MSB FIRE STATION 6-2
WASILLA, ALASKA

DATE: 5/9/2018
DRAWN: DJD
CHECKED: JBC
PROJECT: 1725
DRAWING TITLE: ABBREVIATIONS, SYMBOLS, GEN. NOTES & CODE SUMMARY
REVISIONS:
SHEET NO: G1.3

FIRE RESISTIVE SEPARATION & FULL HEIGHT WALL LEGEND

- INDICATES 1-HR FIRE-RESISTIVE WALL CONSTRUCTION, FULL HT. TO METAL ROOF DECK ABOVE.
- INDICATES .5-HR FIRE-RESISTIVE CORRIDOR WALL CONSTRUCTION, FULL HT. TO METAL ROOF DECK ABOVE.
- INDICATES WALL CONSTRUCTION TO RESIST THE PASSAGE OF SMOKE PER IBC TABLE 509.
- INDICATES WALL CONSTRUCTION, FULL HT. TO METAL ROOF DECK ABOVE.

INTERIOR WALL PARTITIONS WITHOUT DESIGNATION EXTEND 6" ABOVE THE HIGHEST ADJACENT CEILING.

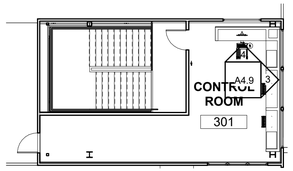

2 ROOF ACCESS PARTITION PLAN
3/32" = 1'-0"

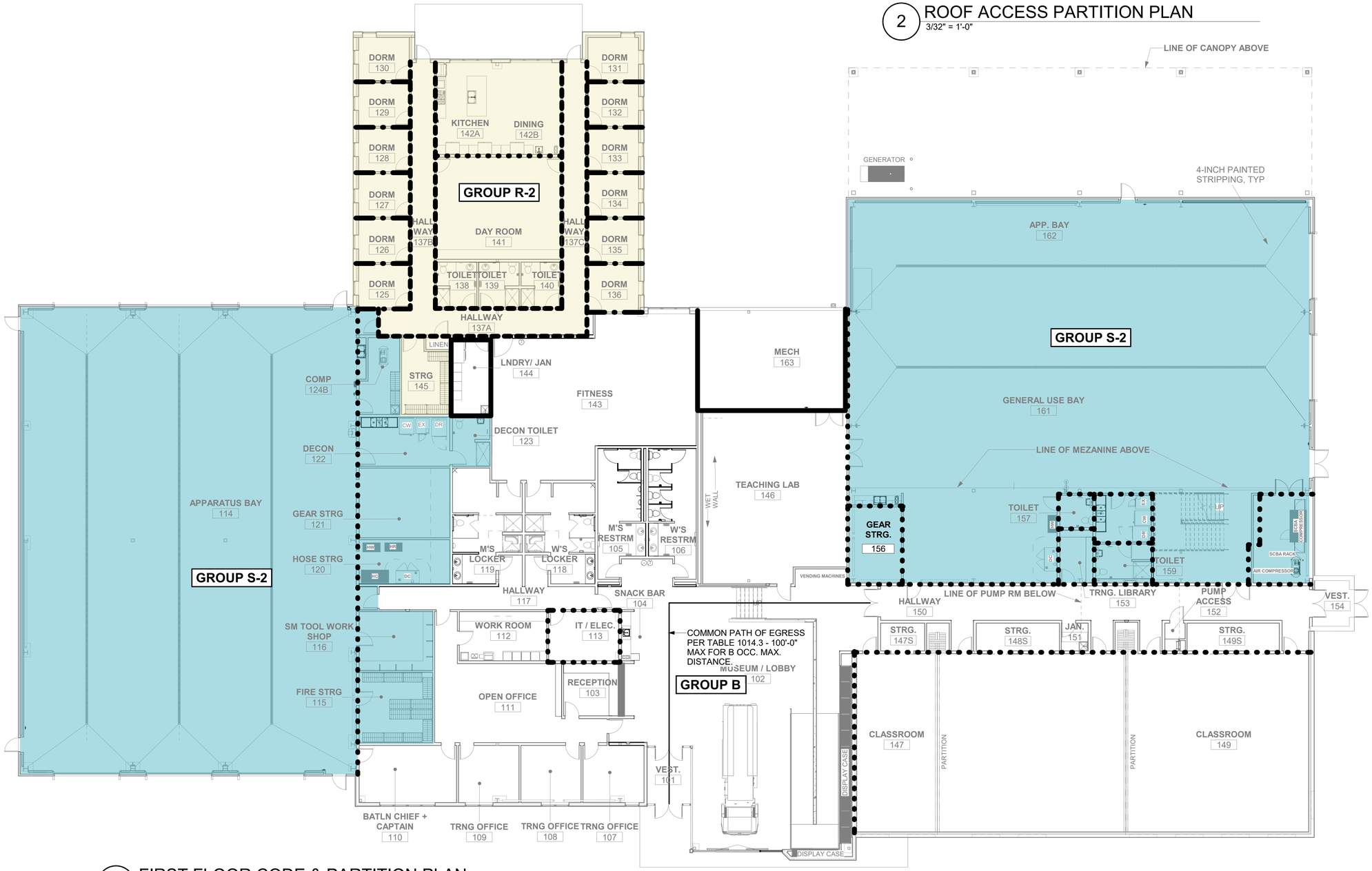

1 FIRST FLOOR CODE & PARTITION PLAN
1" = 12'-0"

STATE OF ALASKA 49TH DAVE JAMES DREHER A-14794 Registered Professional Architect
5/9/18

Burkhart Croft ARCHITECTS LLC
880 N Street Suite 302 | Anchorage Alaska 99501
T: 907.929.9334 | www.burkhart-croft.com

MATANUSKA-SUSITNA BOROUGH

MSB FIRE STATION 6-2

WASILLA, ALASKA

DATE:	5/9/2018
DRAWN:	JKJ
CHECKED:	JBC
PROJECT:	1725
DRAWING TITLE:	FIRE RATED AND FULL HEIGHT WALLS
REVISIONS:	
SHEET NO:	G1.4

EGRESS OCCUPANT LOAD SCHEDULE

RM NO.	ROOM NAME	OCC. GROUP	AREA	TABLE 1004.1.2 FUNCTION OF SPACE	OCC. LOAD FACTOR	ROUNDED OCC. LOAD
102	MUSEUM / LOBBY	B	2418 SF	BUSINESS AREA	100 SF	25
103	RECEPTION	B	134 SF	BUSINESS AREA	100 SF	2
104	SNACK BAR	B	141 SF	BUSINESS AREA	100 SF	2
107	TRNG OFFICE	B	164 SF	BUSINESS AREA	100 SF	2
108	TRNG OFFICE	B	161 SF	BUSINESS AREA	100 SF	2
109	TRNG OFFICE	B	162 SF	BUSINESS AREA	100 SF	2
110	BATLN CHIEF + CAPTAIN	B	261 SF	BUSINESS AREA	100 SF	3
111	OPEN OFFICE	B	529 SF	BUSINESS AREA	100 SF	6
112	WORK ROOM	B	202 SF	BUSINESS AREA	100 SF	2
113	IT / ELEC.	B	161 SF	ACCESSORY STORAGE/ MECH. EQUIP.	300 SF	1
114	APPARATUS BAY	S-2	7335 SF	PARKING GARAGE	200 SF	36
115	FIRE STRG	S-2	242 SF	ACCESSORY STORAGE/ MECH. EQUIP.	300 SF	1
116	SM TOOL WORK SHOP	S-2	203 SF	ACCESSORY STORAGE/ MECH. EQUIP.	300 SF	1
118	W'S LOCKER	B	282 SF	LOCKER ROOM	50 SF	7
119	M'S LOCKER	B	306 SF	LOCKER ROOM	50 SF	7
120	HOSE STRG	S-2	189 SF	ACCESSORY STORAGE/ MECH. EQUIP.	300 SF	1
121	GEAR STRG	S-2	298 SF	ACCESSORY STORAGE/ MECH. EQUIP.	300 SF	1
122	DECON	S-2	208 SF	ACCESSORY STORAGE/ MECH. EQUIP.	300 SF	1
124A	JAN.	S-2	78 SF	ACCESSORY STORAGE/ MECH. EQUIP.	300 SF	1
124B	COMP	S-2	50 SF	ACCESSORY STORAGE/ MECH. EQUIP.	300 SF	1
125	DORM	R-2	103 SF	RESIDENTIAL	200 SF	1
126	DORM	R-2	103 SF	RESIDENTIAL	200 SF	1
127	DORM	R-2	103 SF	RESIDENTIAL	200 SF	1
128	DORM	R-2	103 SF	RESIDENTIAL	200 SF	1
129	DORM	R-2	103 SF	RESIDENTIAL	200 SF	1
130	DORM	R-2	103 SF	RESIDENTIAL	200 SF	1
131	DORM	R-2	103 SF	RESIDENTIAL	200 SF	1
132	DORM	R-2	103 SF	RESIDENTIAL	200 SF	1
133	DORM	R-2	103 SF	RESIDENTIAL	200 SF	1
134	DORM	R-2	103 SF	RESIDENTIAL	200 SF	1
135	DORM	R-2	103 SF	RESIDENTIAL	200 SF	1
136	DORM	R-2	113 SF	RESIDENTIAL	200 SF	1
141	DAY ROOM	R-2	596 SF	ASSEMBLY (UNCONCENTRATED)	15 SF	40
142A	KITCHEN	R-2	276 SF	RESIDENTIAL	200 SF	2
142B	DINING	R-2	256 SF	ASSEMBLY (UNCONCENTRATED)	15 SF	18
143	FITNESS	B	1311 SF	EXERCISE ROOM	50 SF	30
144	LNDRY/ JAN	R-2	135 SF	ACCESSORY STORAGE/ MECH. EQUIP.	300 SF	1
145	STRG	R-2	157 SF	ACCESSORY STORAGE/ MECH. EQUIP.	300 SF	1
146	TEACHING LAB	B	1116 SF	CLASSROOM AREA	20 SF	56
147	CLASSROOM	B	688 SF	CLASSROOM AREA	20 SF	35
147S	STRG.	B	57 SF	ACCESSORY STORAGE/ MECH. EQUIP.	300 SF	1
148	CLASSROOM		1613 SF			
148S	STRG.	B	108 SF	ACCESSORY STORAGE/ MECH. EQUIP.	300 SF	1
149	CLASSROOM	B	1543 SF	CLASSROOM AREA	20 SF	77
149S	STRG.	B	120 SF	ACCESSORY STORAGE/ MECH. EQUIP.	300 SF	1
151	JAN.	B	35 SF	ACCESSORY STORAGE/ MECH. EQUIP.	300 SF	1
152	PUMP ACCESS	B	23 SF	ACCESSORY STORAGE/ MECH. EQUIP.	300 SF	1
153	TRNG. LIBRARY	B	82 SF	ACCESSORY STORAGE/ MECH. EQUIP.	300 SF	1
155	STORAGE		826 SF			
156	GEAR STRG.	S-2	188 SF	ACCESSORY STORAGE/ MECH. EQUIP.	300 SF	1
158	DECON	S-2	123 SF	ACCESSORY STORAGE/ MECH. EQUIP.	300 SF	1
160	SCBA		245 SF			
161	GENERAL USE BAY	S-2	2413 SF	PARKING GARAGE	200 SF	12
162	APP. BAY	S-2	2317 SF	PARKING GARAGE	200 SF	12
163	MECH	B	821 SF	ACCESSORY STORAGE/ MECH. EQUIP.	300 SF	2
164	PUMP ROOM		303 SF	ACCESSORY STORAGE/ MECH. EQUIP.	300 SF	1
202	MEZZANINE	S-2	1756 SF	ACCESSORY STORAGE/ MECH. EQUIP.	300 SF	6
301	CONTROL ROOM	S-2	430 SF	BUSINESS AREA	100 SF	5
302	STAIR		70 SF			

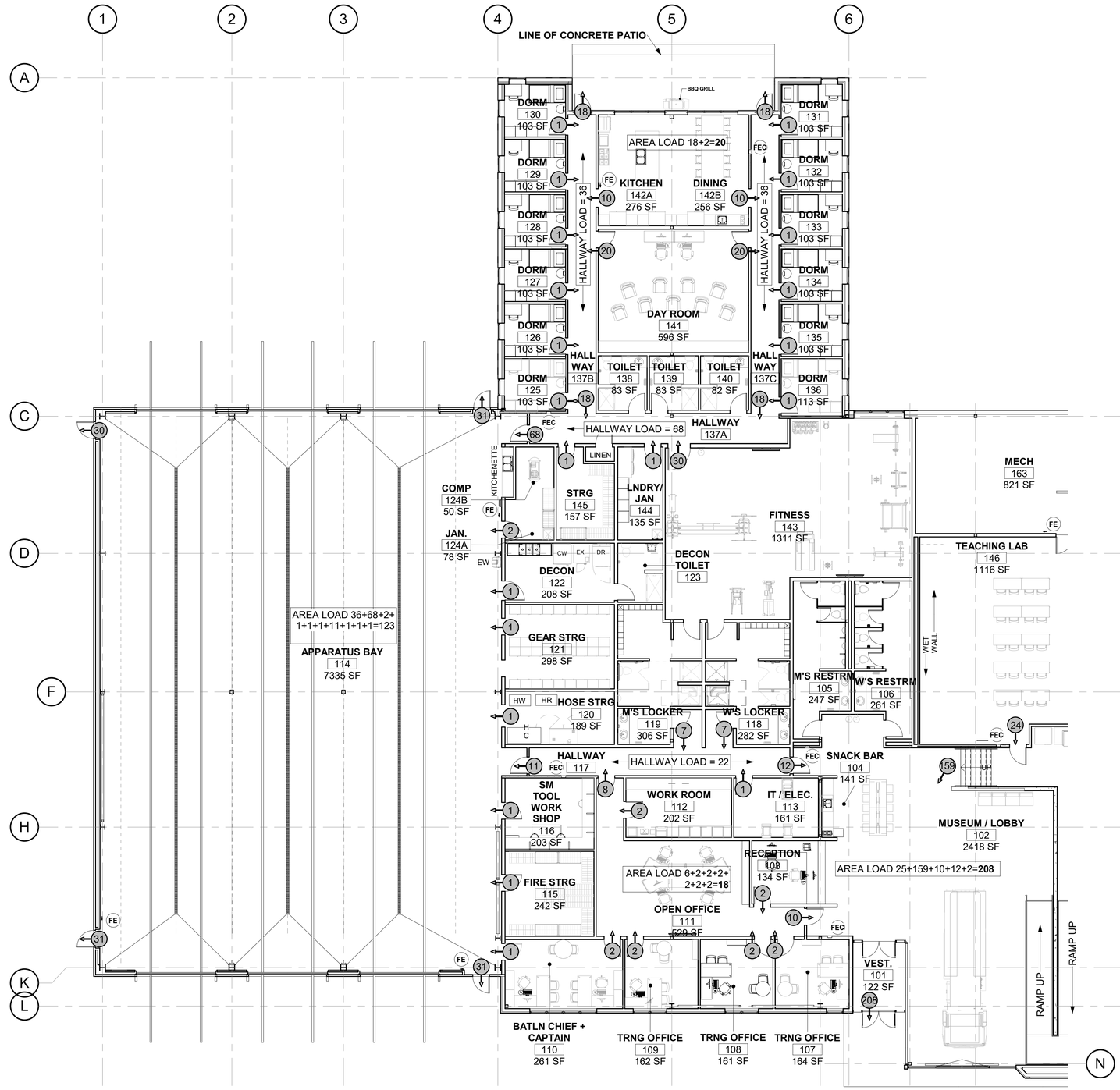

1 OCCUPANT LOAD FIRST FLOOR PLAN -WEST
1" = 12'-0"

STATE OF ALASKA 49TH
DAVE JAMES DREHER
A-14794
Registered Professional Architect
5/9/18

Burkhart Croft ARCHITECTS LLC
880 N Street Suite 302 | Anchorage Alaska 99501
T: 907.929.9334 | www.burkhart-croft.com

MATANUSKA-SUSITNA BOROUGH

MSB FIRE STATION 6-2

WASILLA, ALASKA

DATE: 5/9/2018
DRAWN: JKJ
CHECKED: JBC
PROJECT: 1725
DRAWING TITLE: OCCUPANT LOAD PLAN
REVISIONS:
SHEET NO: **G1.5**

EGRESS OCCUPANT LOAD SCHEDULE

RM NO.	ROOM NAME	OCC. GROUP	AREA	TABLE 1004.1.2 FUNCTION OF SPACE	OCC. LOAD FACTOR	ROUNDED OCC. LOAD
102	MUSEUM / LOBBY	B	2418 SF	BUSINESS AREA	100 SF	25
103	RECEPTION	B	134 SF	BUSINESS AREA	100 SF	2
104	SNACK BAR	B	141 SF	BUSINESS AREA	100 SF	2
107	TRNG OFFICE	B	164 SF	BUSINESS AREA	100 SF	2
108	TRNG OFFICE	B	161 SF	BUSINESS AREA	100 SF	2
109	TRNG OFFICE	B	162 SF	BUSINESS AREA	100 SF	2
110	BATLN CHIEF + CAPTAIN	B	261 SF	BUSINESS AREA	100 SF	3
111	OPEN OFFICE	B	529 SF	BUSINESS AREA	100 SF	6
112	WORK ROOM	B	202 SF	BUSINESS AREA	100 SF	2
113	IT / ELEC.	B	161 SF	ACCESSORY STORAGE/ MECH. EQUIP.	300 SF	1
114	APPARATUS BAY	S-2	7335 SF	PARKING GARAGE	200 SF	36
115	FIRE STRG	S-2	242 SF	ACCESSORY STORAGE/ MECH. EQUIP.	300 SF	1
116	SM TOOL WORK SHOP	S-2	203 SF	ACCESSORY STORAGE/ MECH. EQUIP.	300 SF	1
118	W'S LOCKER	B	282 SF	LOCKER ROOM	50 SF	7
119	M'S LOCKER	B	306 SF	LOCKER ROOM	50 SF	7
120	HOSE STRG	S-2	189 SF	ACCESSORY STORAGE/ MECH. EQUIP.	300 SF	1
121	GEAR STRG	S-2	298 SF	ACCESSORY STORAGE/ MECH. EQUIP.	300 SF	1
122	DECON	S-2	208 SF	ACCESSORY STORAGE/ MECH. EQUIP.	300 SF	1
124A	JAN.	S-2	78 SF	ACCESSORY STORAGE/ MECH. EQUIP.	300 SF	1
124B	COMP	S-2	50 SF	ACCESSORY STORAGE/ MECH. EQUIP.	300 SF	1
125	DORM	R-2	103 SF	RESIDENTIAL	200 SF	1
126	DORM	R-2	103 SF	RESIDENTIAL	200 SF	1
127	DORM	R-2	103 SF	RESIDENTIAL	200 SF	1
128	DORM	R-2	103 SF	RESIDENTIAL	200 SF	1
129	DORM	R-2	103 SF	RESIDENTIAL	200 SF	1
130	DORM	R-2	103 SF	RESIDENTIAL	200 SF	1
131	DORM	R-2	103 SF	RESIDENTIAL	200 SF	1
132	DORM	R-2	103 SF	RESIDENTIAL	200 SF	1
133	DORM	R-2	103 SF	RESIDENTIAL	200 SF	1
134	DORM	R-2	103 SF	RESIDENTIAL	200 SF	1
135	DORM	R-2	103 SF	RESIDENTIAL	200 SF	1
136	DORM	R-2	113 SF	RESIDENTIAL	200 SF	1
141	DAY ROOM	R-2	596 SF	ASSEMBLY (UNCONCENTRATED)	15 SF	40
142A	KITCHEN	R-2	276 SF	RESIDENTIAL	200 SF	2
142B	DINING	R-2	256 SF	ASSEMBLY (UNCONCENTRATED)	15 SF	18
143	FITNESS	B	1311 SF	EXERCISE ROOM	50 SF	30
144	LNDRY/ JAN	R-2	135 SF	ACCESSORY STORAGE/ MECH. EQUIP.	300 SF	1
145	STRG	R-2	157 SF	ACCESSORY STORAGE/ MECH. EQUIP.	300 SF	1
146	TEACHING LAB	B	1116 SF	CLASSROOM AREA	20 SF	56
147	CLASSROOM	B	688 SF	CLASSROOM AREA	20 SF	35
147S	STRG.	B	57 SF	ACCESSORY STORAGE/ MECH. EQUIP.	300 SF	1
148	CLASSROOM		1613 SF			
148S	STRG.	B	108 SF	ACCESSORY STORAGE/ MECH. EQUIP.	300 SF	1
149	CLASSROOM	B	1543 SF	CLASSROOM AREA	20 SF	77
149S	STRG.	B	120 SF	ACCESSORY STORAGE/ MECH. EQUIP.	300 SF	1
151	JAN.	B	35 SF	ACCESSORY STORAGE/ MECH. EQUIP.	300 SF	1
152	PUMP ACCESS	B	23 SF	ACCESSORY STORAGE/ MECH. EQUIP.	300 SF	1
153	TRNG. LIBRARY	B	82 SF	ACCESSORY STORAGE/ MECH. EQUIP.	300 SF	1
155	STORAGE		826 SF			
156	GEAR STRG.	S-2	188 SF	ACCESSORY STORAGE/ MECH. EQUIP.	300 SF	1
158	DECON	S-2	123 SF	ACCESSORY STORAGE/ MECH. EQUIP.	300 SF	1
160	SCBA		245 SF			
161	GENERAL USE BAY	S-2	2413 SF	PARKING GARAGE	200 SF	12
162	APP. BAY	S-2	2317 SF	PARKING GARAGE	200 SF	12
163	MECH	B	821 SF	ACCESSORY STORAGE/ MECH. EQUIP.	300 SF	2
164	PUMP ROOM		303 SF	ACCESSORY STORAGE/ MECH. EQUIP.	300 SF	1
202	MEZZANINE	S-2	1756 SF	ACCESSORY STORAGE/ MECH. EQUIP.	300 SF	6
301	CONTROL ROOM	S-2	430 SF	BUSINESS AREA	100 SF	5
302	STAIR		70 SF			

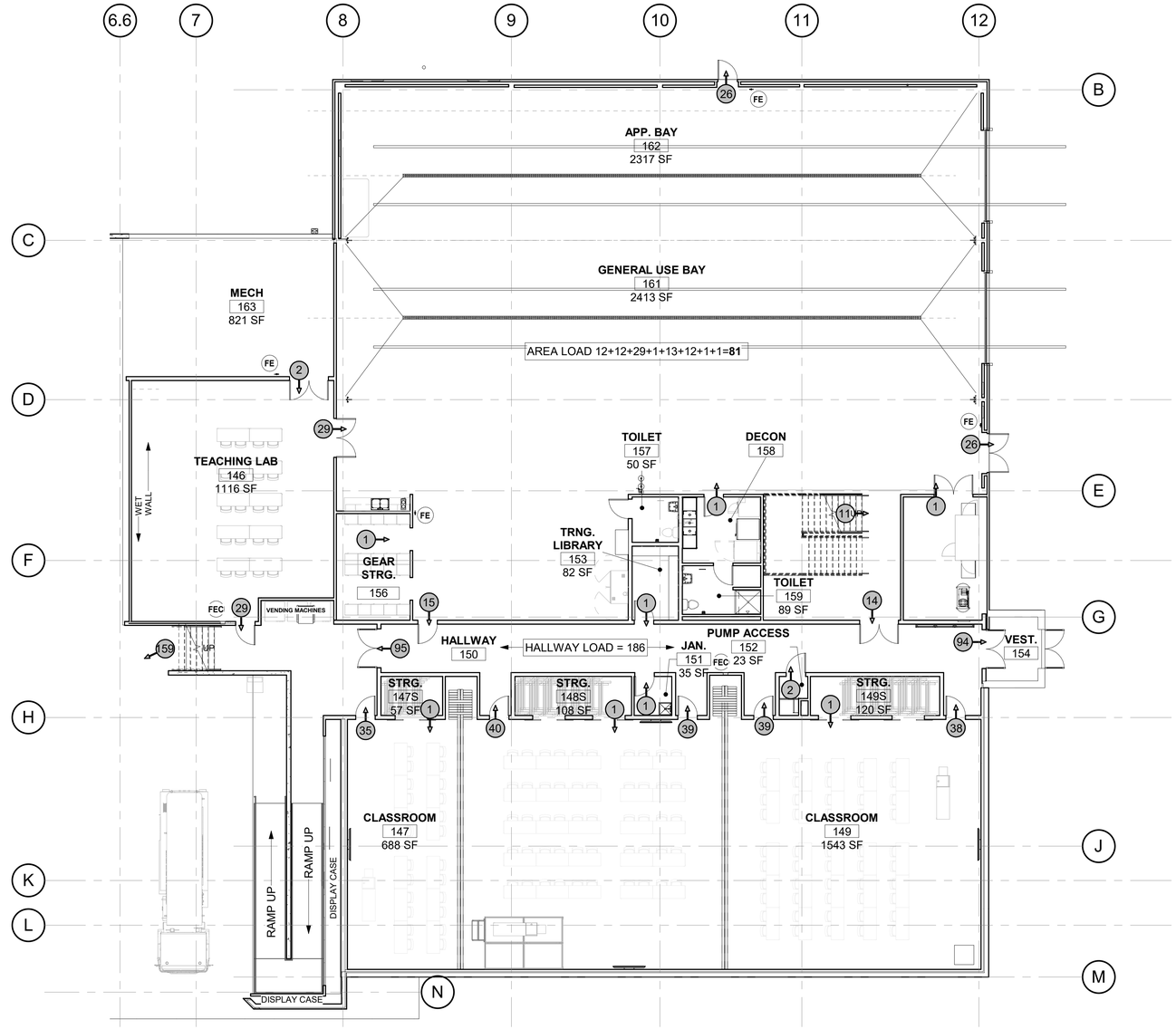

1 OCCUPANT LOAD PLAN - EAST
1" = 12'-0"

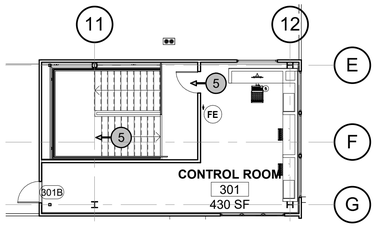

3 OCCUPANT LOAD ROOF ACCESS PLAN
1" = 10'-0"

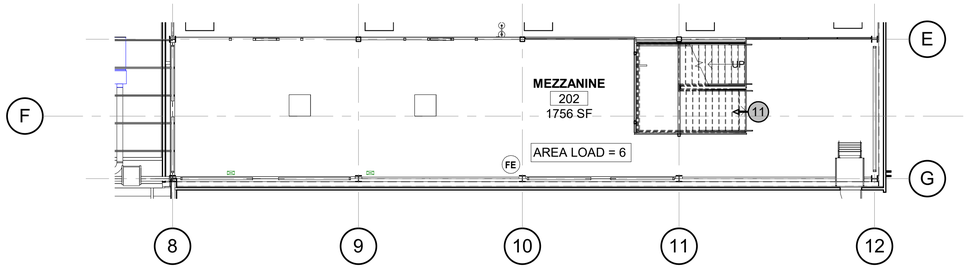

2 OCCUPANT LOAD MEZZANINE PLAN
1" = 10'-0"

STATE OF ALASKA 49TH DAVE JAMES DREHER A-14794 Registered Professional Architect
5/9/18

Burkhart Croft ARCHITECTS LLC
880 N Street Suite 302 | Anchorage Alaska 99501
T: 907.929.9334 | www.burkhart-croft.com

MATANUSKA-SUSITNA BOROUGH

MSB FIRE STATION 6-2

WASILLA, ALASKA

DATE: 5/9/2018

DRAWN: JKJ

CHECKED: JBC

PROJECT: 1725

DRAWING TITLE: OCCUPANT LOAD PLAN

REVISIONS:

SHEET NO:

G1.6

ROOF TYPES

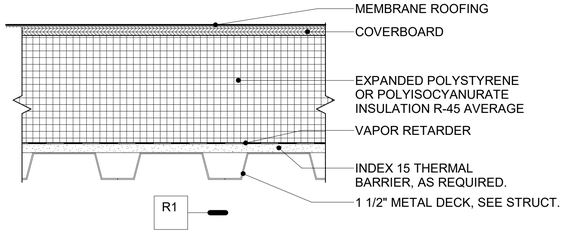

WALL TYPES

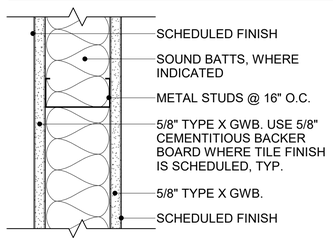

A XS — QUALIFIES AS 1 HOUR ASSEMBLY PER IBC TABLE 720.1(2), ITEM 13-1.1

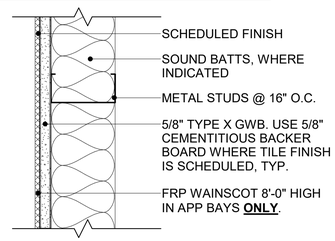

B XS

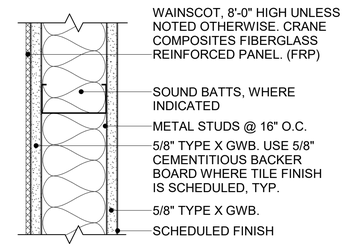

C S

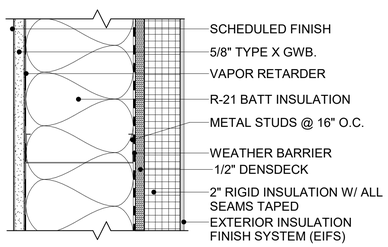

E XS — **EXTERIOR**

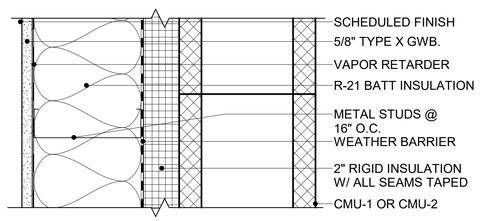

F XS — **EXTERIOR**

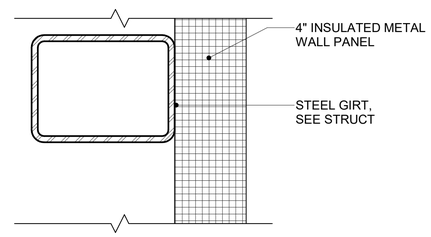

G — **EXTERIOR**

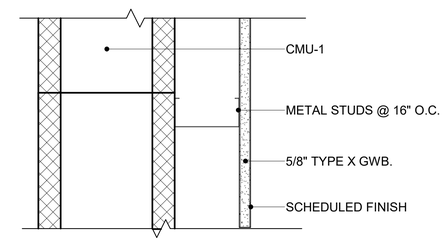

H X

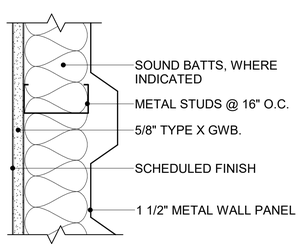

J XS

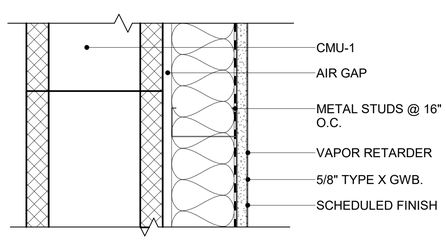

K XS — **EXTERIOR**

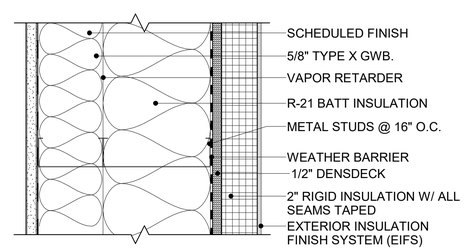

L XS — **EXTERIOR**

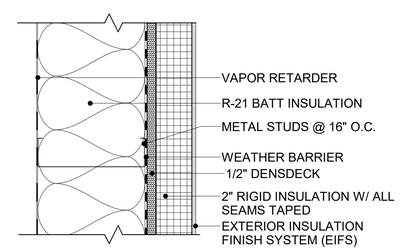

M XS — **EXTERIOR**

FLOOR TYPES

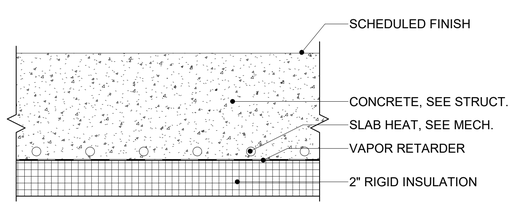

F1 X

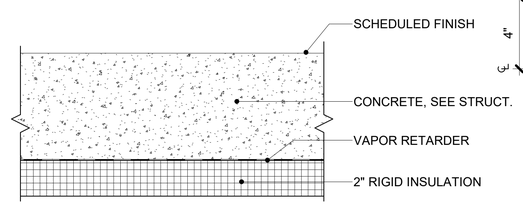

F2 X

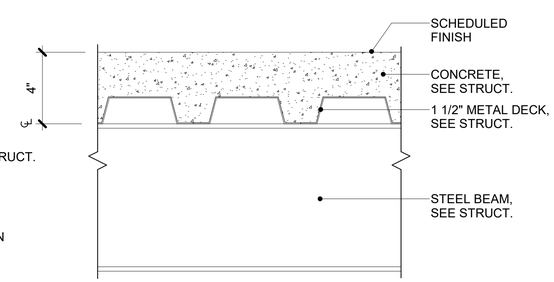

F3 X

LEGEND

ROOF — R1 — INDICATES ROOF TYPE DESIGNATION

WALL — A / 3.5 S
- INDICATES WALL TYPE DESIGNATION
- INDICATES SOUND WALL REQUIREMENTS. PROVIDE SOUND BATTS FULL HT OF WALL, & PERIMETER ACOUSTIC SEALANT AT ALL GWB EDGE TERMINATIONS & WALL PENETRATIONS.
- INDICATES NOMINAL METAL STUD DEPTH

FLOOR — F1 / X
- INDICATES FLOOR TYPE DESIGNATION
- INDICATES NOMINAL CONCRETE THICKNESS

3.5 METAL STUD DEPTH CALLOUT DENOTES 3 5/8" METAL STUD

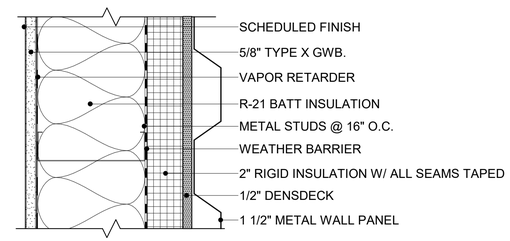

D XS — **EXTERIOR**

STATE OF ALASKA 49TH DAVE JAMES DREHER A-14794 Registered Professional Architect 5/9/18

Burkhart Croft ARCHITECTS LLC
880 N Street Suite 302 | Anchorage Alaska 99501
T: 907.929.9334 | www.burkhart-croft.com

MATANUSKA-SUSITNA BOROUGH

MSB FIRE STATION 6-2

WASILLA, ALASKA

DATE:	5/9/2018
DRAWN:	TOS
CHECKED:	DJD
PROJECT:	1725
DRAWING TITLE:	WALL ROOF AND FLOOR ASSEMBLIES
REVISIONS:	
SHEET NO:	G1.7

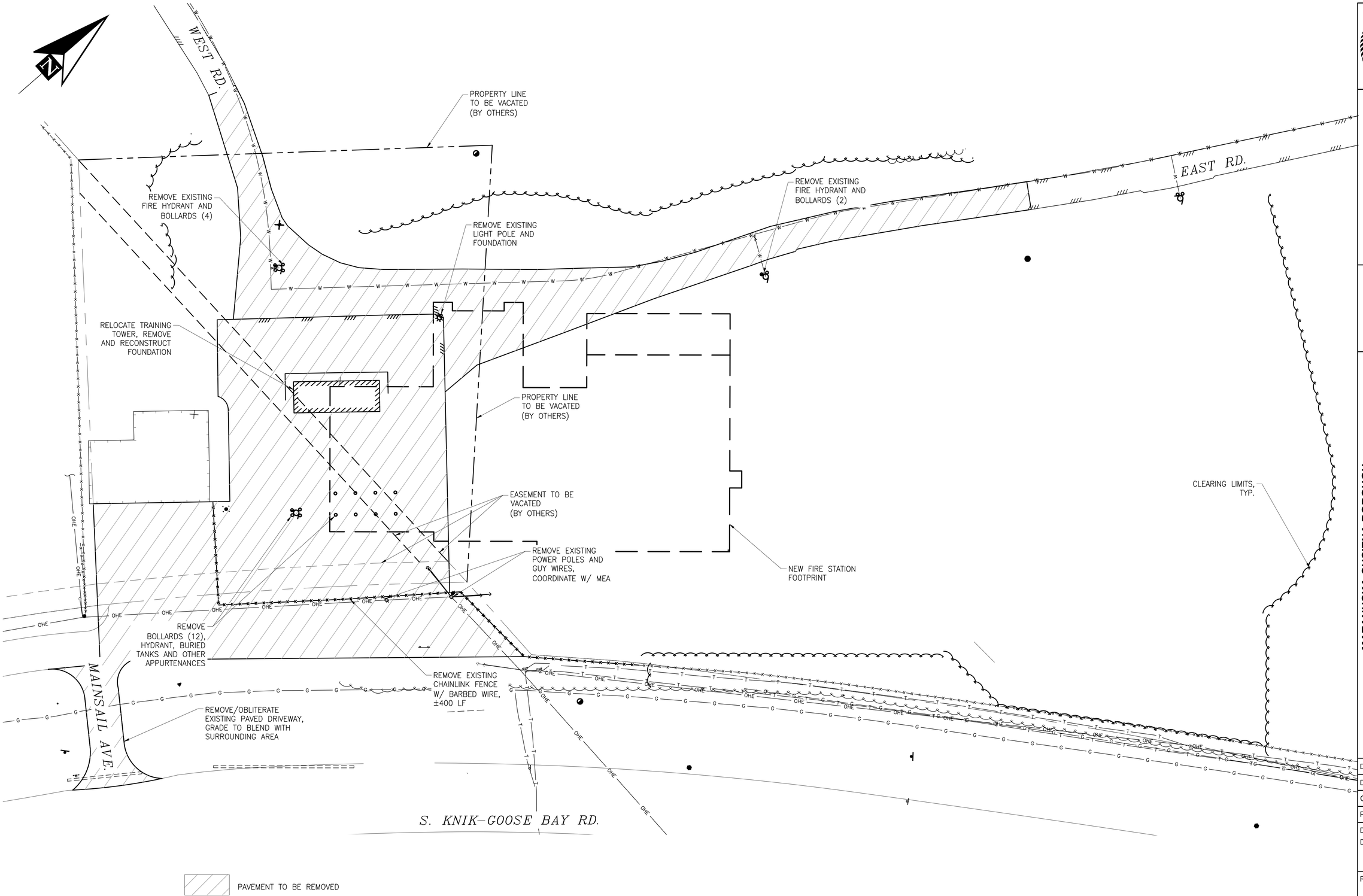

STATE OF ALASKA 49TH
Douglas T. Kenley
CE-8176
5/9/18
REGISTERED PROFESSIONAL ENGINEER

Burkhart Croft ARCHITECTS LLC
880 N Street Suite 302 | Anchorage Alaska 99501
T: 907.929.9334 | www.burkhart-croft.com

PND ENGINEERS, INC.
1506 WEST 36th AVENUE
ANCHORAGE, AK, 99503
PH 907.561.1011
WWW.PNDENGINEERS.COM

MATANUSKA-SUSITNA BOROUGH

MSB FIRE STATION 6-2

WASILLA, ALASKA

DATE: 5/9/18
DRAWN: BA
CHECKED: DTK
PROJECT: 1725
DRAWING TITLE: Demolition
REVISIONS:
SHEET NO: C0.1

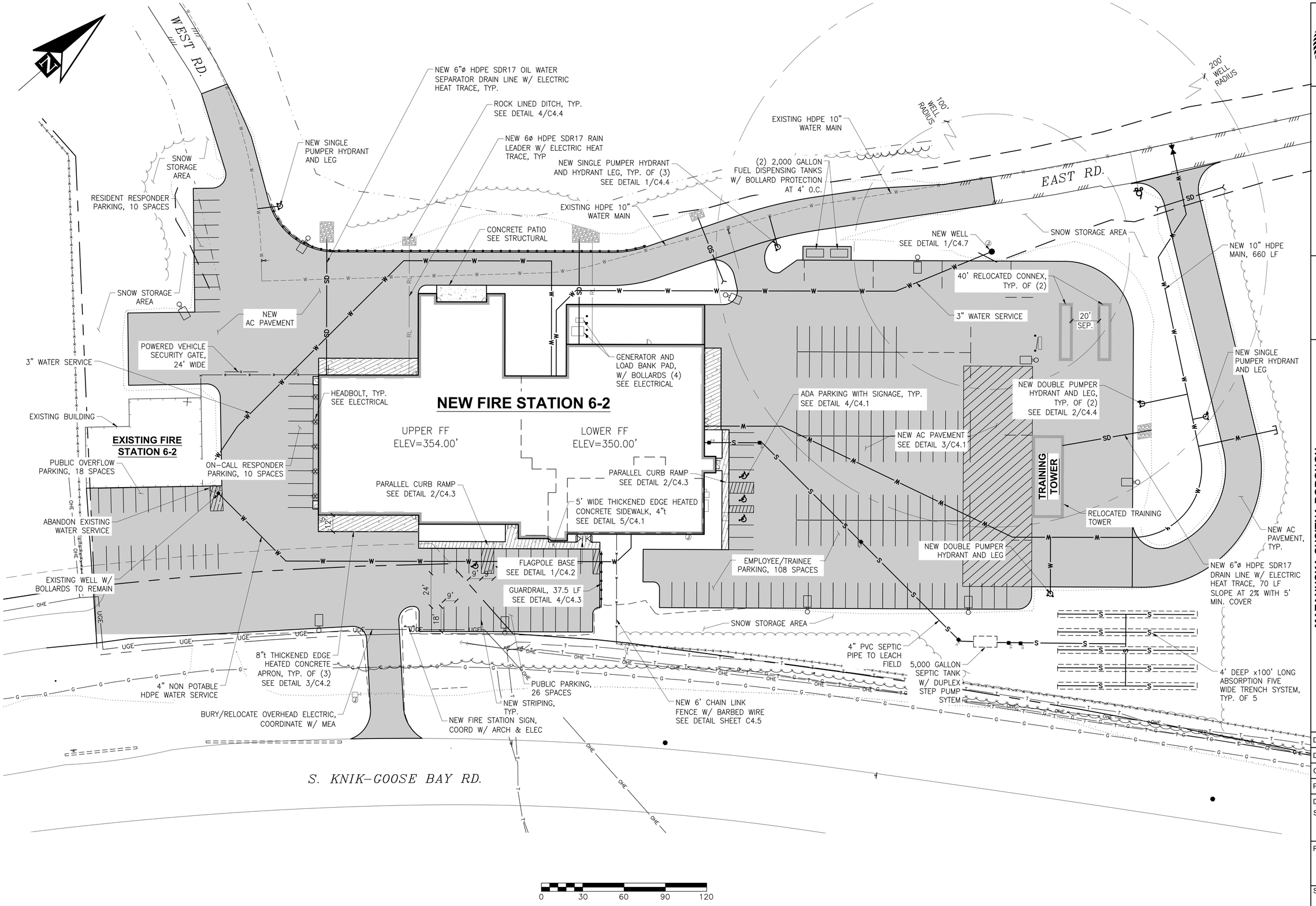

STATE OF ALASKA 49TH Douglas T. Kenley CE-8176 5/9/18 REGISTERED PROFESSIONAL ENGINEER

Burkhart Croft ARCHITECTS LLC
880 N Street Suite 302 | Anchorage Alaska 99501
T: 907.929.9334 | www.burkhart-croft.com

PND ENGINEERS, INC.
1506 WEST 36th AVENUE
ANCHORAGE, AK, 99503
PH 907.561.1011
WWW.PNDENGINEERS.COM

MATANUSKA-SUSITNA BOROUGH

MSB FIRE STATION 6-2

WASILLA, ALASKA

DATE: 5/9/18
DRAWN: BA
CHECKED: DTK
PROJECT: 1725
DRAWING TITLE: Site Plan
REVISIONS:
SHEET NO: C1.1

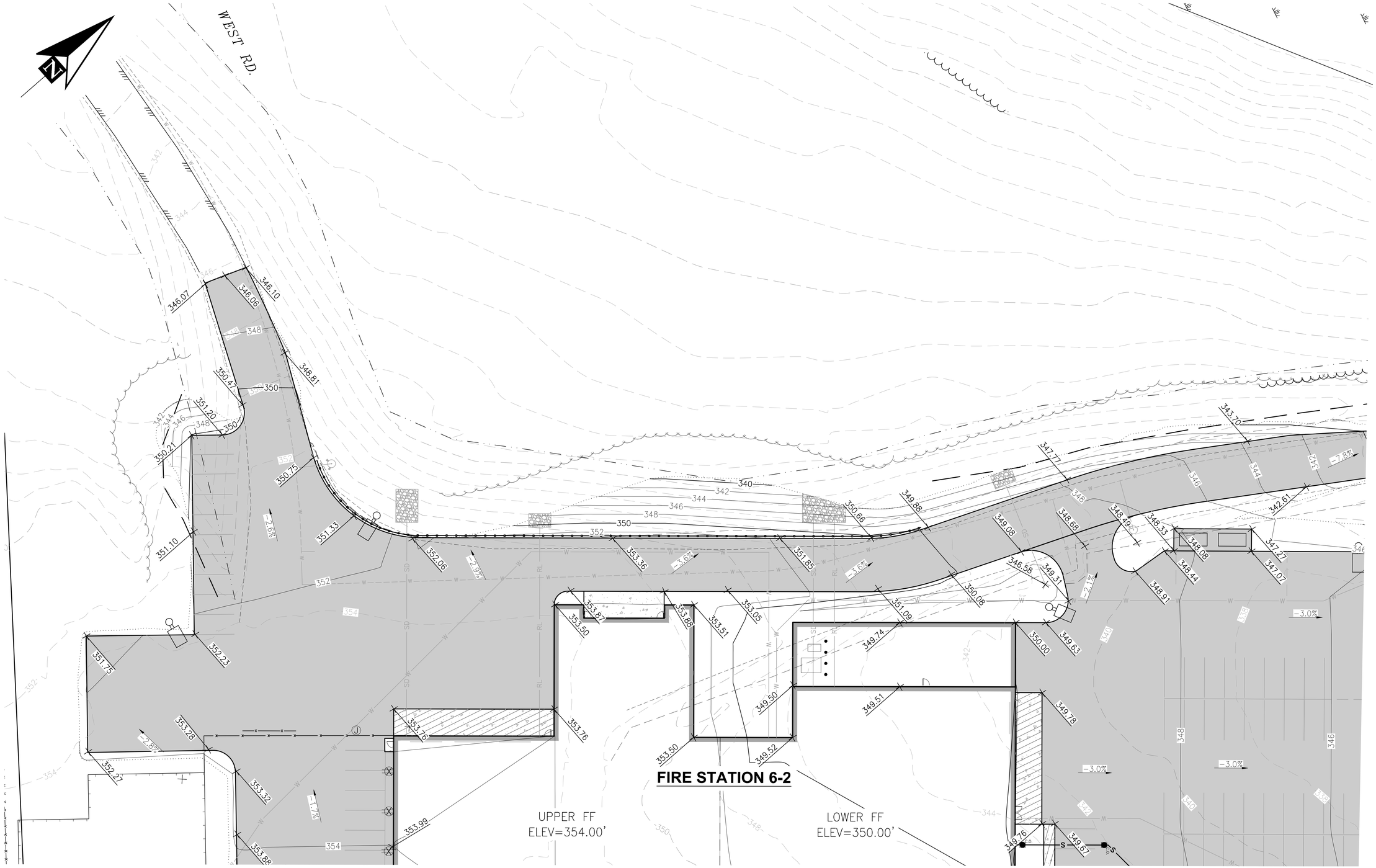

STATE OF ALASKA
49 TH
Douglas T. Kenley
CE-8176
5/9/18
REGISTERED PROFESSIONAL ENGINEER

Burkhart Croft
ARCHITECTS LLC
880 N Street Suite 302 | Anchorage Alaska 99501
T: 907.929.9334 | www.burkhart-croft.com

PND
ENGINEERS, INC.
1506 WEST 36th AVENUE
ANCHORAGE, AK, 99503
PH 907.561.1011
WWW.PNDENGINEERS.COM

MATANUSKA-SUSITNA BOROUGH

MSB FIRE STATION 6-2

WASILLA, ALASKA

DATE:	5/9/18
DRAWN:	BA
CHECKED:	DTK
PROJECT:	1725
DRAWING TITLE:	Grading Plan
REVISIONS:	
SHEET NO:	C1.2

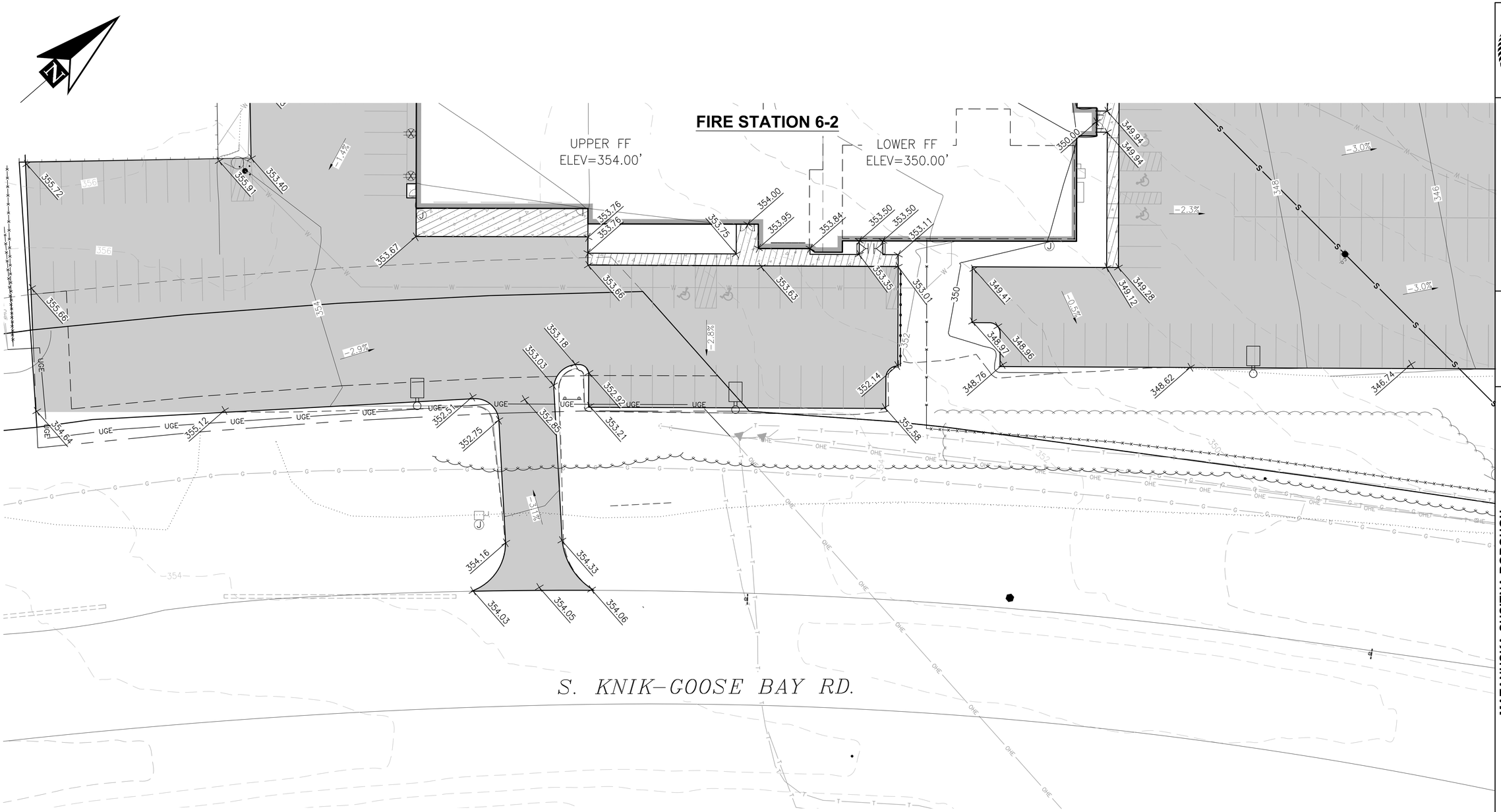

0 20 40 60 80

STATE OF ALASKA
49 TH
Douglas T. Kenley
CE-8176
5/9/19
REGISTERED PROFESSIONAL ENGINEER

Burkhart Croft
ARCHITECTS LLC
880 N Street Suite 302 | Anchorage Alaska 99501
T: 907.929.9334 | www.burkhart-croft.com

PND
ENGINEERS, INC.
1506 WEST 36th AVENUE
ANCHORAGE, AK, 99503
PH 907.561.1011
WWW.PNDENGINEERS.COM

MATANUSKA-SUSITNA BOROUGH

MSB FIRE STATION 6-2

WASILLA, ALASKA

DATE:	5/9/18
DRAWN:	BA
CHECKED:	DTK
PROJECT:	1725
DRAWING TITLE:	Grading Plan
REVISIONS:	
SHEET NO:	**C1.3**

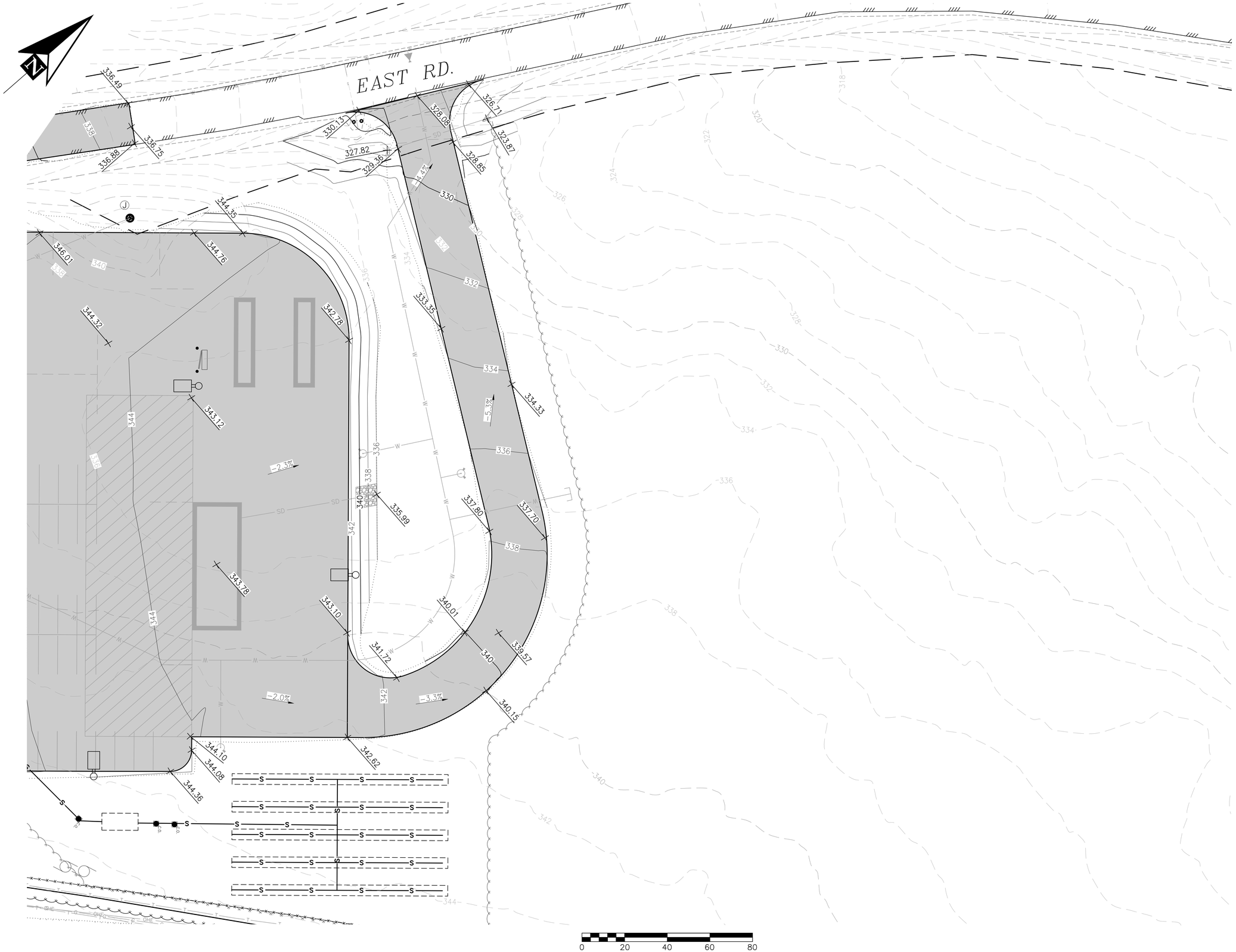

STATE OF ALASKA
49TH
Douglas T. Kenley
CE-8176
5/9/18
REGISTERED PROFESSIONAL ENGINEER

Burkhart Croft
ARCHITECTS LLC
880 N Street Suite 302 | Anchorage Alaska 99501
T: 907.929.9334 | www.burkhart-croft.com

P | N | D
ENGINEERS, INC.
1506 WEST 36th AVENUE
ANCHORAGE, AK, 99503
PH 907.561.1011
WWW.PNDENGINEERS.COM

MATANUSKA-SUSITNA BOROUGH

MSB FIRE STATION 6-2

WASILLA, ALASKA

DATE:	5/9/18
DRAWN:	BA
CHECKED:	DTK
PROJECT:	1725
DRAWING TITLE:	Grading Plan
REVISIONS:	
SHEET NO:	C1.4

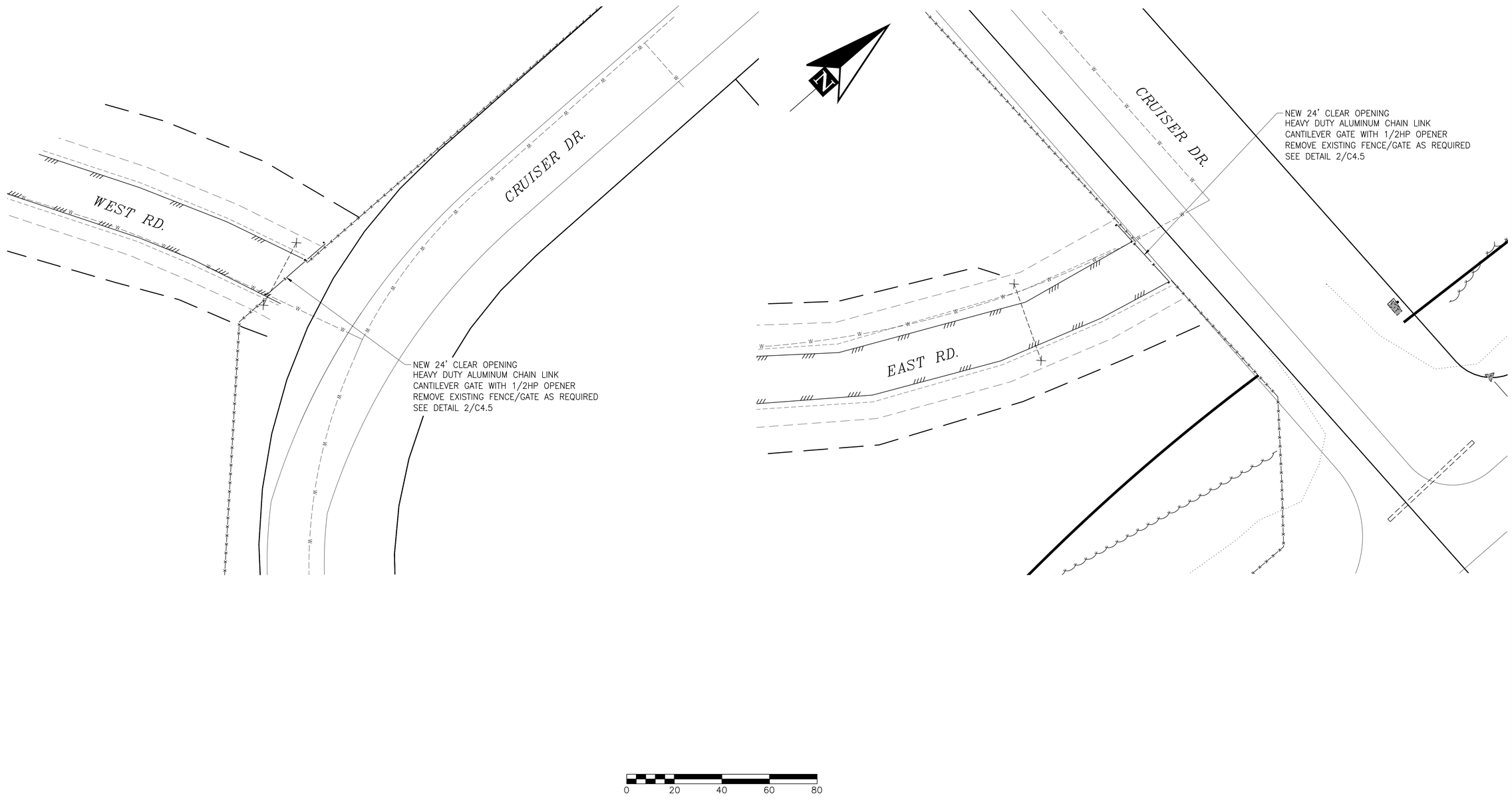

STATE OF ALASKA
49 TH
Douglas T. Kenley
CE-8176
5/9/19
REGISTERED PROFESSIONAL ENGINEER

Burkhart Croft
ARCHITECTS LLC
880 N Street Suite 302 | Anchorage Alaska 99501
T: 907.929.9334 | www.burkhart-croft.com

PND
ENGINEERS, INC.
1506 WEST 36th AVENUE
ANCHORAGE, AK, 99503
PH 907.561.1011
WWW.PNDENGINEERS.COM

MATANUSKA-SUSITNA BOROUGH

MSB FIRE STATION 6-2

WASILLA, ALASKA

DATE: 5/9/18

DRAWN: BA

CHECKED: DTK

PROJECT: 1725

DRAWING TITLE:
FENCE GATE PLAN

REVISIONS:

SHEET NO:

C1.5

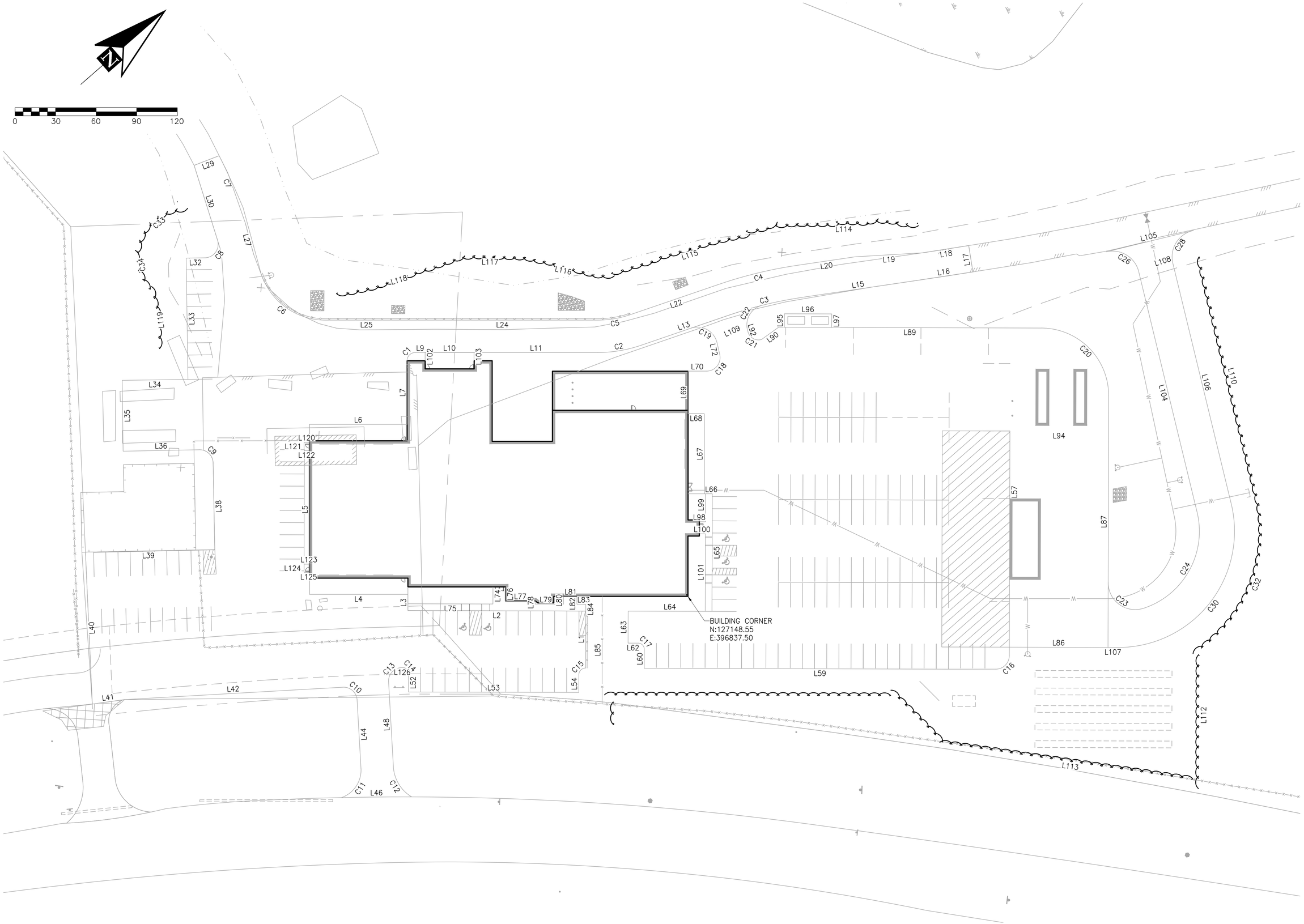

STATE OF ALASKA
49 TH
Douglas T. Kenley
CE-8176
5/9/18
REGISTERED PROFESSIONAL ENGINEER

Burkhart Croft
ARCHITECTS LLC
880 N Street Suite 302 | Anchorage Alaska 99501
T: 907.929.9334 | www.burkhart-croft.com

PND
ENGINEERS, INC.
1506 WEST 36th AVENUE
ANCHORAGE, AK, 99503
PH 907.561.1011
WWW.PNDENGINEERS.COM

MATANUSKA-SUSITNA BOROUGH

MSB FIRE STATION 6-2

WASILLA, ALASKA

DATE:	5/9/18
DRAWN:	BA
CHECKED:	DTK
PROJECT:	1725
DRAWING TITLE:	SITE LAYOUT PLAN
REVISIONS:	
SHEET NO:	C1.6

LINE TABLE

LINE	LENGTH	DIRECTION	START NORTHING	START EASTING	END NORTHING	END EASTING	DESCRIPTION
L1	42.20'	N48° 36' 34"W	127056.65	396827.49	127084.5	396795.83	
L2	131.58'	S41° 24' 51"W	127084.55	396795.83	126985.9	396708.80	
L3	11.96'	N48° 44' 01"W	126985.87	396708.80	126993.8	396699.80	
L4	72.83'	S41° 14' 28"W	126993.76	396699.80	126939.0	396651.79	
L5	125.83'	N48° 45' 32"W	126939.00	396651.79	127022.0	396557.17	
L6	72.25'	N41° 14' 28"E	127021.95	396557.17	127076.3	396604.80	
L7	47.16'	N48° 45' 32"W	127076.28	396604.80	127107.4	396569.34	
L9	7.33'	N41° 14' 28"E	127115.83	396568.78	127121.3	396573.62	
L10	36.17'	N41° 14' 28"E	127121.35	396573.62	127148.5	396597.46	
L11	91.22'	N41° 14' 28"E	127148.54	396597.46	127217.1	396657.59	
L13	69.04'	N22° 19' 17"E	127245.08	396674.91	127308.9	396701.13	
L15	85.27'	N32° 50' 43"E	127357.72	396726.61	127429.4	396772.86	
L16	42.75'	N32° 34' 17"E	127429.36	396772.86	127465.4	396795.87	
L17	19.75'	N57° 47' 32"W	127465.39	396795.87	127475.9	396779.17	
L18	34.67'	S32° 16' 57"W	127475.91	396779.17	127446.6	396760.65	
L19	50.00'	S37° 53' 00"W	127446.60	396760.65	127407.1	396729.94	
L20	43.33'	S32° 50' 43"W	127407.14	396729.94	127370.7	396706.44	
L22	69.04'	S22° 19' 17"W	127318.06	396678.93	127254.2	396652.70	
L24	140.27'	S41° 14' 28"W	127232.96	396639.55	127127.5	396547.07	
L25	60.92'	S41° 14' 28"W	127127.48	396547.07	127081.7	396506.91	
L27	48.09'	N64° 00' 00"W	127069.69	396447.40	127090.8	396404.18	
L29	19.86'	S20° 10' 26"W	127102.81	396363.62	127084.2	396356.77	
L30	58.09'	S66° 07' 52"E	127084.17	396356.77	127060.7	396409.89	
L32	13.82'	S40° 24' 51"W	127045.04	396413.46	127034.5	396404.49	
L33	89.83'	S49° 35' 09"E	127034.51	396404.49	126976.3	396472.89	
L34	48.66'	S40° 24' 51"W	126976.28	396472.89	126939.2	396441.34	
L35	52.45'	S49° 32' 09"E	126939.23	396441.34	126905.2	396481.25	
L36	56.40'	N40° 09' 06"E	126905.19	396481.25	126948.3	396517.62	
L38	64.14'	S49° 50' 54"E	126949.50	396531.71	126908.1	396580.74	
L39	98.32'	S40° 09' 06"W	126908.14	396580.74	126833.0	396517.34	
L40	112.70'	S52° 40' 44"E	126832.99	396517.34	126764.7	396606.96	
L41	23.70'	N33° 13' 06"E	126764.66	396606.96	126784.5	396619.95	
L42	162.13'	N38° 00' 00"E	126784.49	396619.95	126912.3	396719.77	
L44	50.79'	S52° 00' 00"E	126913.98	396733.81	126882.7	396773.83	
L46	51.95'	N40° 41' 41"E	126857.68	396780.54	126897.1	396814.41	
L48	62.84'	N52° 00' 00"W	126901.62	396788.61	126940.3	396739.09	
L52	14.06'	S48° 38' 32"E	126955.71	396743.89	126946.4	396754.44	
L53	126.00'	N41° 21' 28"E	126946.42	396754.44	127041.0	396837.70	
L54	13.00'	N48° 38' 32"W	127041.00	396837.70	127049.6	396827.94	
L57	242.58'	S48° 36' 34"E	127458.77	396845.24	127298.4	397027.23	
L59	260.08'	S41° 23' 09"W	127284.29	397028.14	127089.2	396856.19	
L60	14.08'	N48° 36' 34"W	127089.16	396856.19	127098.5	396845.63	
L62	7.49'	S41° 23' 26"W	127098.07	396839.28	127092.4	396834.32	
L63	23.67'	N48° 35' 08"W	127092.45	396834.32	127108.1	396816.57	
L64	62.00'	N41° 24' 11"E	127108.11	396816.57	127154.6	396857.57	
L65	87.02'	N48° 37' 56"W	127154.61	396857.57	127212.1	396792.26	
L66	5.90'	S41° 14' 28"W	127212.12	396792.26	127207.7	396788.38	
L67	59.28'	N48° 45' 32"W	127207.69	396788.38	127246.8	396743.80	
L68	12.00'	S41° 14' 28"W	127246.77	396743.80	127237.7	396735.89	
L69	31.53'	N48° 45' 32"W	127237.74	396735.89	127258.5	396712.19	
L70	13.70'	N41° 14' 28"E	127258.53	396712.19	127268.8	396721.22	
L72	8.90'	N61° 34' 15"W	127284.22	396718.46	127288.5	396710.63	
L74	12.54'	S48° 35' 08"E	127044.64	396737.23	127036.3	396746.63	
L75	62.89'	S41° 24' 05"W	127036.35	396746.63	126989.2	396705.04	
L76	10.25'	S48° 45' 32"E	127051.66	396743.36	127044.9	396751.07	
L77	21.93'	N41° 14' 28"E	127044.91	396751.07	127061.4	396765.52	
L78	2.41'	S48° 34' 21"E	127061.39	396765.52	127059.8	396767.33	
L79	20.88'	N41° 25' 39"E	127059.80	396767.33	127075.5	396781.14	
L80	5.81'	N48° 45' 32"W	127075.46	396781.14	127079.3	396776.78	
L81	10.00'	N41° 14' 28"E	127079.29	396776.78	127086.8	396783.37	

LINE TABLE

LINE	LENGTH	DIRECTION	START NORTHING	START EASTING	END NORTHING	END EASTING	DESCRIPTION
L82	5.84'	S48° 45' 32"E	127086.81	396783.37	127083.0	396787.76	
L83	6.53'	N41° 25' 39"E	127082.96	396787.76	127087.9	396792.08	
L84	5.00'	S48° 35' 08"E	127087.86	396792.08	127084.5	396795.83	
L85	80.02'	N48° 45' 32"W	127048.37	396855.49	127101.1	396795.32	
L86	73.00'	N41° 23' 26"E	127302.54	397022.50	127357.3	397070.77	
L87	186.27'	N48° 36' 34"W	127357.31	397070.77	127480.5	396931.03	
L89	194.32'	S41° 24' 51"W	127476.03	396860.47	127330.3	396731.93	
L90	15.55'	S5° 37' 44"W	127330.30	396731.93	127314.8	396730.40	
L92	0.90'	N65° 28' 49"W	127311.00	396719.65	127311.4	396718.83	
L94	73.00'	S41° 23' 26"W	127463.10	396950.74	127408.3	396902.47	
L95	10.00'	N48° 19' 47"W	127333.47	396734.72	127340.1	396727.25	
L96	35.00'	N41° 24' 51"E	127340.12	396727.25	127366.4	396750.41	
L97	10.00'	S48° 19' 47"E	127366.37	396750.41	127359.7	396757.88	
L98	4.93'	N41° 35' 24"E	127191.04	396801.25	127194.7	396804.52	
L99	20.69'	N48° 45' 32"W	127194.73	396804.52	127208.4	396788.97	
L100	4.91'	N41° 24' 52"E	127185.12	396808.00	127188.8	396811.25	
L101	57.36'	S48° 35' 08"E	127188.80	396811.25	127150.9	396854.27	
L102	6.00'	S48° 45' 32"E	127121.35	396573.62	127117.4	396578.13	
L103	6.00'	S48° 45' 32"E	127148.54	396597.46	127144.6	396601.97	
L104	183.09'	N62° 23' 22"W	127472.86	397038.93	127557.7	396876.69	
L105	66.29'	N27° 28' 15"E	127549.45	396849.80	127608.3	396880.38	
L106	183.26'	S62° 23' 22"E	127580.83	396888.59	127495.9	397050.98	
L107	7.37'	S41° 23' 26"W	127362.83	397075.64	127357.3	397070.77	
L108	49.06'	N23° 30' 10"E	127552.55	396875.71	127597.5	396895.28	
L109	45.51'	N16° 33' 22"E	127279.91	396708.06	127323.5	396721.03	
L110	183.27'	S62° 23' 22"E	127598.56	396897.86	127513.6	397060.26	
L112	96.73'	S48° 36' 34"E	127406.88	397116.45	127342.9	397189.02	
L113	190.87'	S49° 31' 29"W	127342.92	397189.02	127219.0	397043.82	
L114	109.29'	S40° 16' 35"W	127458.44	396741.90	127375.1	396671.25	
L115	125.86'	S24° 24' 31"W	127375.05	396671.25	127260.4	396619.24	
L116	64.73'	S53° 08' 04"W	127260.44	396619.24	127221.6	396567.45	
L117	46.56'	S40° 35' 00"W	127221.61	396567.45	127186.3	396537.16	
L118	93.69'	S24° 59' 05"W	127186.25	396537.16	127101.3	396497.59	
L119	40.51'	S55° 40' 28"E	126998.57	396407.75	126975.7	396441.20	
L120	4.00'	S41° 14' 28"W	127013.20	396567.15	127010.2	396564.51	
L121	6.00'	S48° 45' 32"E	127010.19	396564.51	127006.2	396569.03	
L122	4.00'	N41° 14' 28"E	127006.24	396569.03	127009.2	396571.66	
L123	4.00'	S41° 14' 28"W	126953.75	396634.97	126950.7	396632.33	
L124	6.00'	S48° 45' 32"E	126950.74	396632.33	126946.8	396636.84	
L125	4.00'	N41° 14' 28"E	126946.78	396636.84	126949.8	396639.48	
L126	0.81'	N42° 13' 55"E	126954.67	396737.62	126955.3	396738.16	

CURVE TABLE

CURVE	RADIUS	DELTA	CHORD BEARING	CHORD LENGTH	LENGTH	TANGENT	DESCRIPTION
C1	6.000	90.0000	N3°45'32"W	8.49'	9.4'	6.00'	
C2	100.000	18.9199	N31°46'52"E	32.87'	33.0'	16.66'	
C3	300.000	10.5240	N27°35'00"E	55.03'	55.1'	27.63'	
C4	324.000	10.5240	S27°35'00"W	59.43'	59.5'	29.84'	
C5	76.000	18.9199	S31°46'52"W	24.98'	25.1'	12.66'	
C6	50.000	74.7589	S78°37'14"W	60.71'	65.2'	38.20'	
C7	652.498	3.7154	N73°28'12"W	42.30'	42.3'	21.16'	
C8	10.000	106.5451	S12°51'30"E	16.03'	18.6'	13.40'	
C9	10.000	90.0000	N85°09'06"E	14.14'	15.7'	10.00'	
C10	10.000	90.0000	N83°00'00"E	14.14'	15.7'	10.00'	
C11	21.527	73.9994	S15°00'01"E	25.91'	27.8'	16.22'	
C12	27.906	56.0000	N80°00'00"W	26.20'	27.3'	14.84'	
C13	10.017	92.2420	N5°50'17"W	14.44'	16.1'	10.42'	
C14	4.016	91.3272	N85°36'03"E	5.74'	6.4'	4.11'	
C15	5.000	90.0000	N3°38'32"W	7.07'	7.9'	5.00'	
C16	10.000	89.8126	S3°42'11"E	14.12'	15.7'	9.97'	
C17	4.500	90.0000	S86°23'26"W	6.36'	7.1'	4.50'	
C18	10.000	102.8119	N10°09'53"W	15.63'	17.9'	12.53'	
C19	14.964	95.3608	S70°48'34"W	22.13'	24.9'	16.43'	
C20	50.000	89.9765	S86°24'09"W	70.70'	78.5'	49.98'	
C21	8.000	91.0081	S70°24'19"W	11.41'	12.7'	8.14'	
C22	15.051	90.0319	N20°22'58"W	21.29'	23.7'	15.06'	
C23	20.000	108.4117	N77°11'05"E	32.44'	37.8'	27.74'	
C24	60.000	85.3683	N19°42'19"W	81.35'	89.4'	55.34'	
C26	20.000	89.4099	S72°54'20"W	28.14'	31.2'	19.80'	
C28	20.000	91.4144	S16°40'56"E	28.63'	31.9'	20.50'	
C30	86.000	103.7800	S10°29'58"E	135.33'	155.8'	109.64'	
C32	106.315	69.1244	S27°45'50"E	120.63'	128.3'	73.24'	
C33	39.003	43.0037	S3°28'59"W	28.59'	29.3'	15.37'	
C34	34.924	79.1685	S57°36'11"E	44.51'	48.3'	28.88'	

STATE OF ALASKA
49TH
Douglas T. Kenley
CE-8176
5/9/18
REGISTERED PROFESSIONAL ENGINEER

Burkhart Croft ARCHITECTS LLC
880 N Street Suite 302 | Anchorage Alaska 99501
T: 907.929.9334 | www.burkhart-croft.com

PND ENGINEERS, INC.
1506 WEST 36th AVENUE
ANCHORAGE, AK, 99503
PH 907.561.1011
WWW.PNDENGINEERS.COM

MATANUSKA-SUSITNA BOROUGH

MSB FIRE STATION 6-2

WASILLA, ALASKA

DATE: 5/9/18

DRAWN: BA

CHECKED: DTK

PROJECT: 1725

DRAWING TITLE:
SITE LAYOUT TABLES

REVISIONS:

SHEET NO:

C1.7

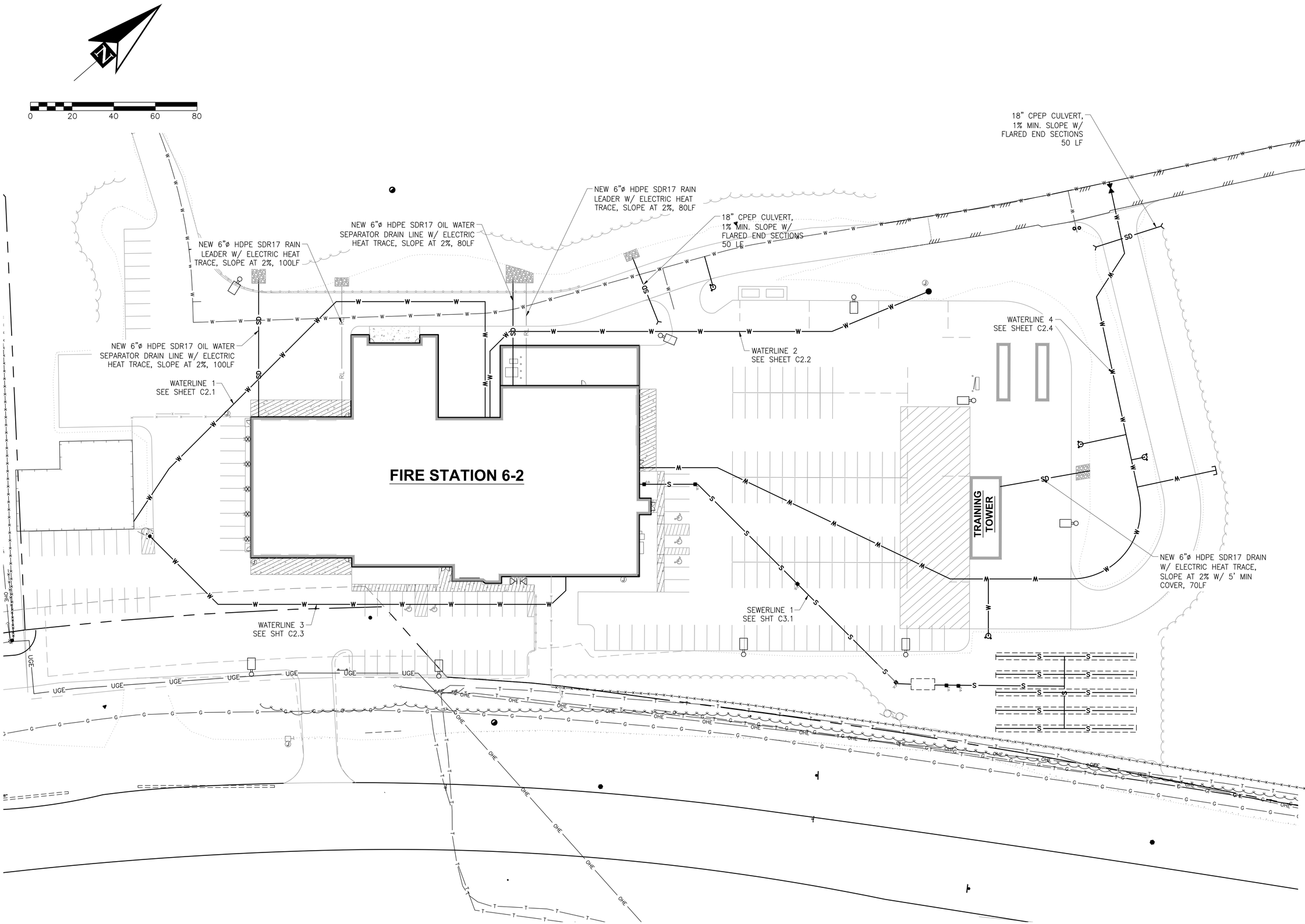

STATE OF ALASKA 49TH
Douglas T. Kenley
CE-8176
5/9/18
REGISTERED PROFESSIONAL ENGINEER

Burkhart Croft ARCHITECTS LLC
880 N Street Suite 302 | Anchorage Alaska 99501
T: 907.929.9334 | www.burkhart-croft.com

PND ENGINEERS, INC.
1506 WEST 36th AVENUE
ANCHORAGE, AK, 99503
PH 907.561.1011
WWW.PNDENGINEERS.COM

MATANUSKA-SUSITNA BOROUGH

MSB FIRE STATION 6-2

WASILLA, ALASKA

DATE:	5/9/18
DRAWN:	BA
CHECKED:	DTK
PROJECT:	1725
DRAWING TITLE:	Utility Overview
REVISIONS:	
SHEET NO:	C2.0

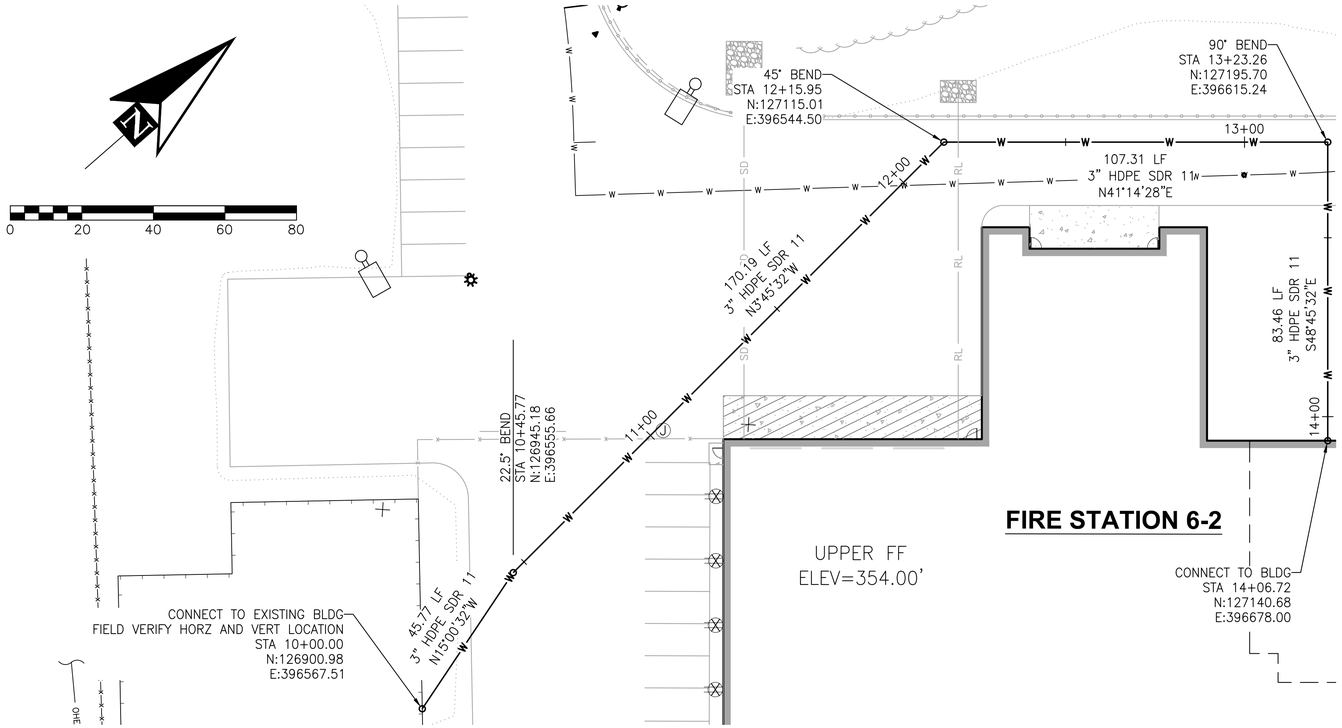

WATERLINE 1 PLAN

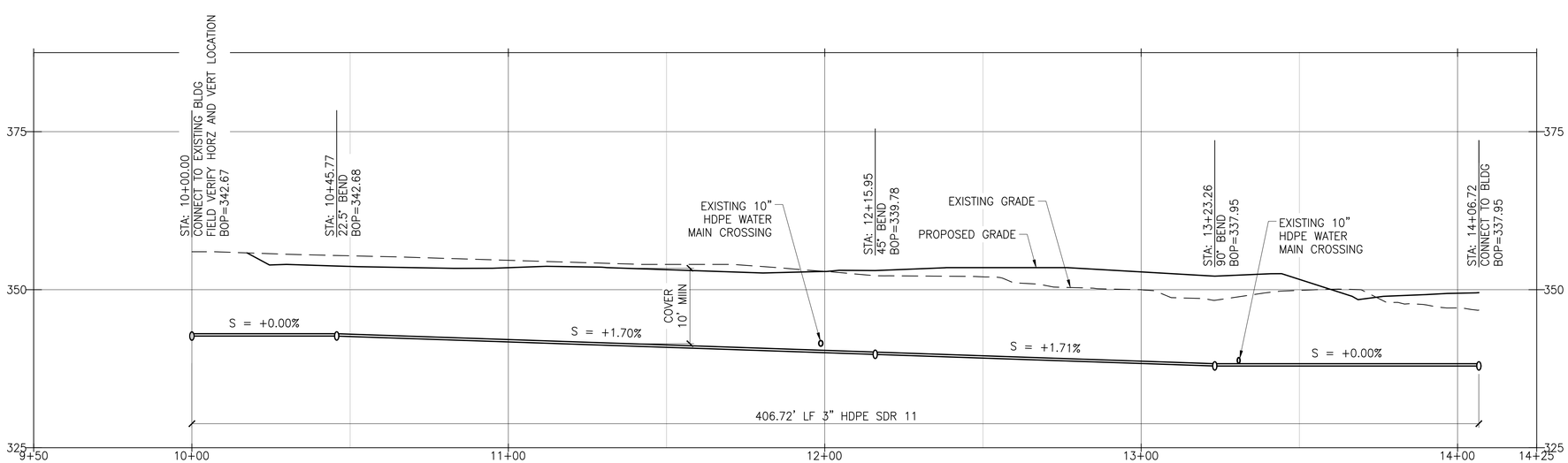

WATERLINE 1 PROFILE

SCALE: 1H:2V

STATE OF ALASKA
49TH
Douglas T. Kenley
CE-8176
5/9/18
REGISTERED PROFESSIONAL ENGINEER

Burkhart Croft ARCHITECTS LLC
880 N Street Suite 302 | Anchorage Alaska 99501
T: 907.929.9334 | www.burkhart-croft.com

PND ENGINEERS, INC.
1506 WEST 36th AVENUE
ANCHORAGE, AK, 99503
PH 907.561.1011
WWW.PNDENGINEERS.COM

MATANUSKA-SUSITNA BOROUGH

MSB FIRE STATION 6-2

WASILLA, ALASKA

DATE:	5/9/18
DRAWN:	BA
CHECKED:	DTK
PROJECT:	1725
DRAWING TITLE:	Waterline 1 Plan & Profile
REVISIONS:	
SHEET NO:	C2.1

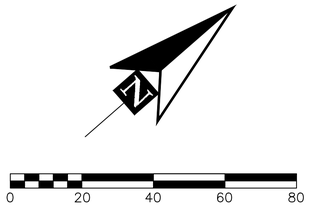

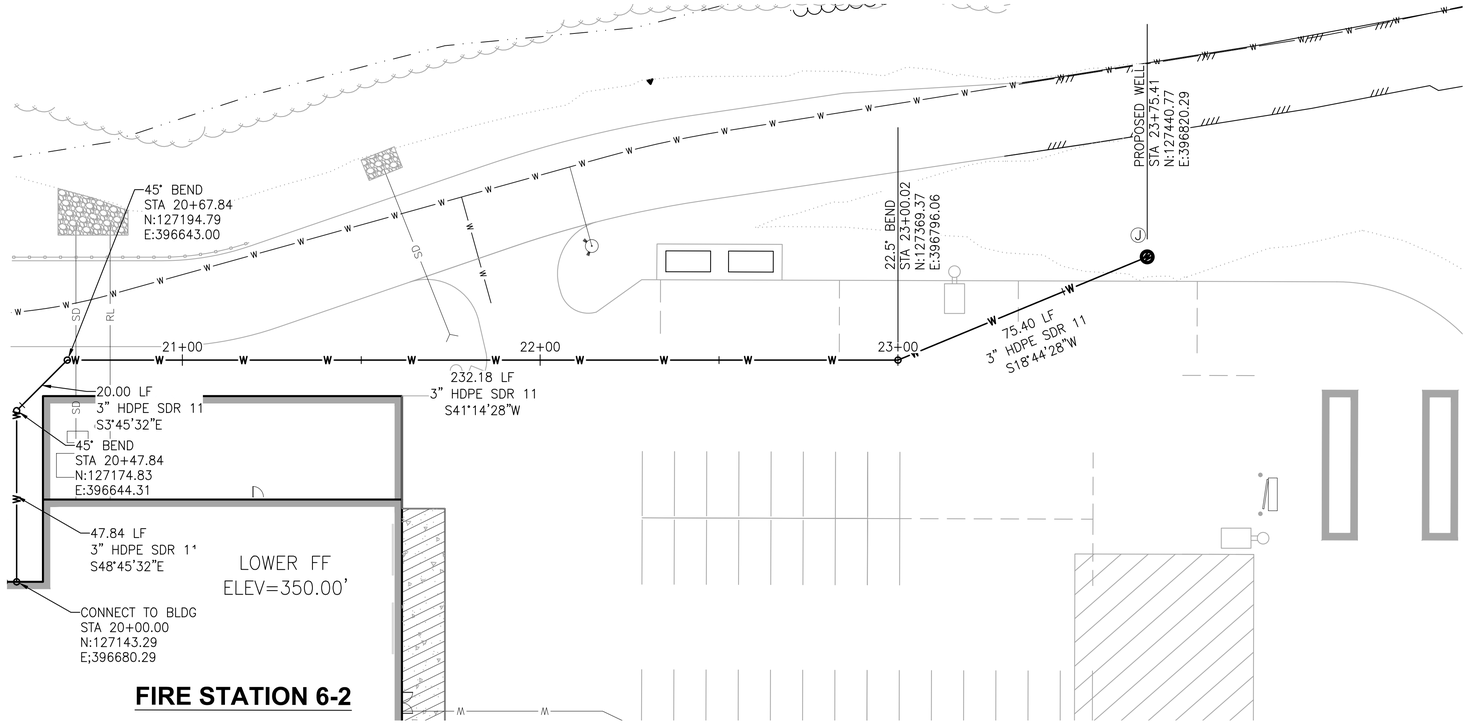

WATERLINE 2 PLAN

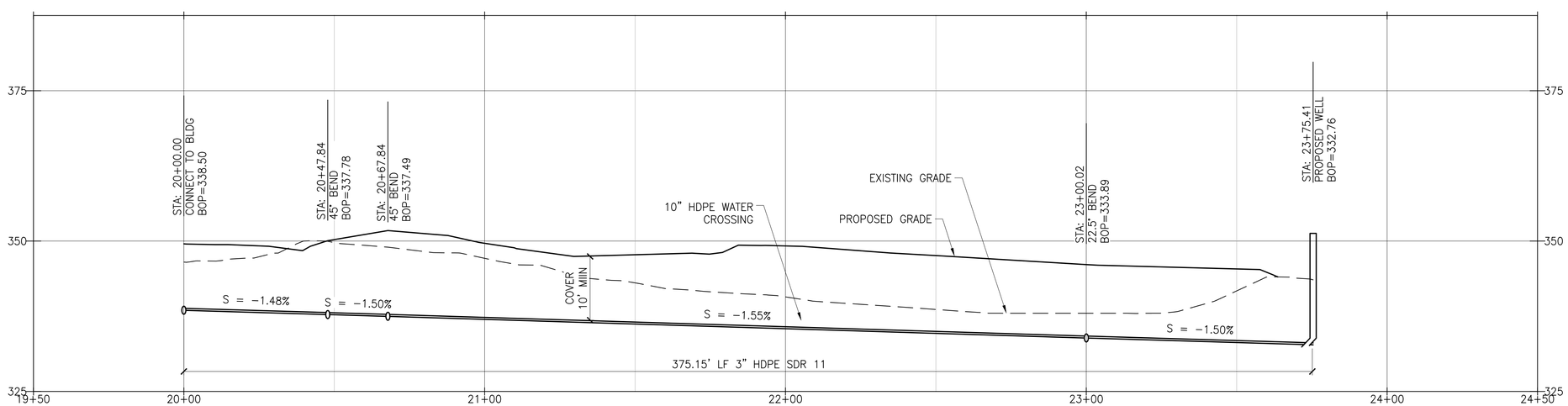

WATERLINE 2 PROFILE

SCALE: 1H:2V

STATE OF ALASKA
49 TH
Douglas T. Kenley
CE-8176
5/9/18
REGISTERED PROFESSIONAL ENGINEER

Burkhart Croft
ARCHITECTS LLC
880 N Street Suite 302 | Anchorage Alaska 99501
T: 907.929.9334 | www.burkhart-croft.com

PND
ENGINEERS, INC.
1506 WEST 36th AVENUE
ANCHORAGE, AK, 99503
PH 907.561.1011
WWW.PNDENGINEERS.COM

MATANUSKA-SUSITNA BOROUGH

MSB FIRE STATION 6-2

WASILLA, ALASKA

DATE:	5/9/18
DRAWN:	BA
CHECKED:	DTK
PROJECT:	1725
DRAWING TITLE:	Waterline 2 Plan & Profile
REVISIONS:	
SHEET NO:	C2.2

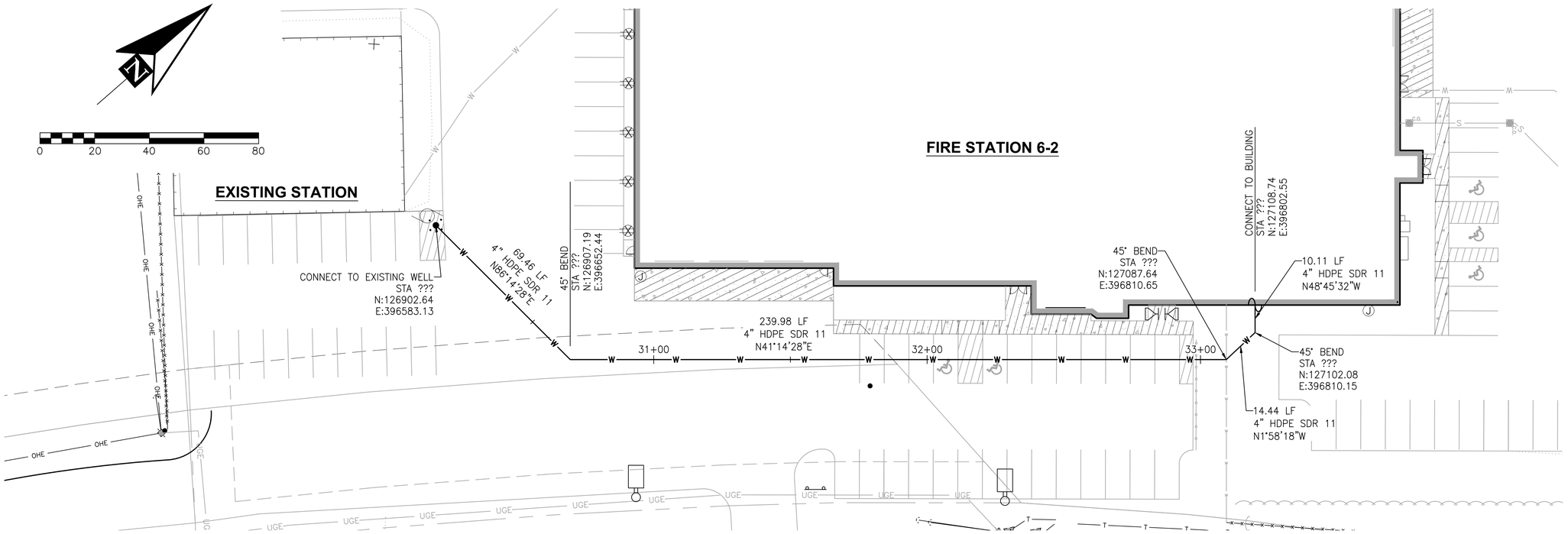

WATERLINE 3 PLAN

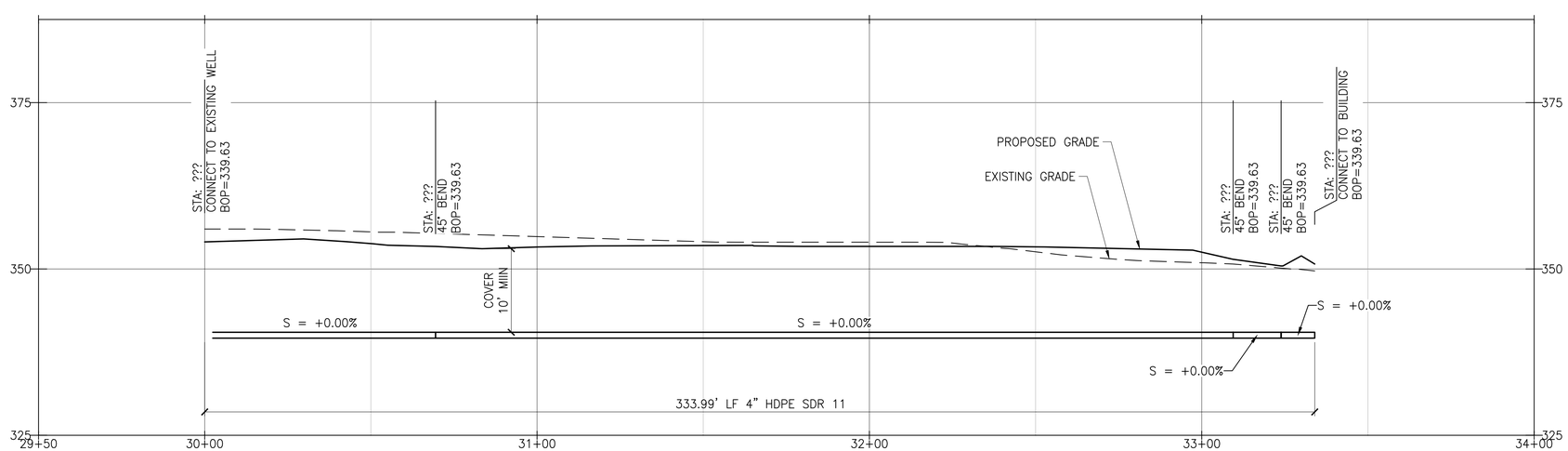

WATERLINE 3 PROFILE

SCALE: 1H:2V

STATE OF ALASKA
49 TH
Douglas T. Kenley
CE-8176
5/9/18
REGISTERED PROFESSIONAL ENGINEER

Burkhart Croft
ARCHITECTS LLC
880 N Street Suite 302 | Anchorage Alaska 99501
T: 907.929.9334 | www.burkhart-croft.com

PND ENGINEERS, INC.
1506 WEST 36th AVENUE
ANCHORAGE, AK, 99503
PH 907.561.1011
WWW.PNDENGINEERS.COM

MATANUSKA-SUSITNA BOROUGH

MSB FIRE STATION 6-2

WASILLA, ALASKA

DATE:	5/9/18
DRAWN:	BA
CHECKED:	DTK
PROJECT:	1725
DRAWING TITLE:	Waterline 3 Plan & Profile
REVISIONS:	
SHEET NO:	C2.3

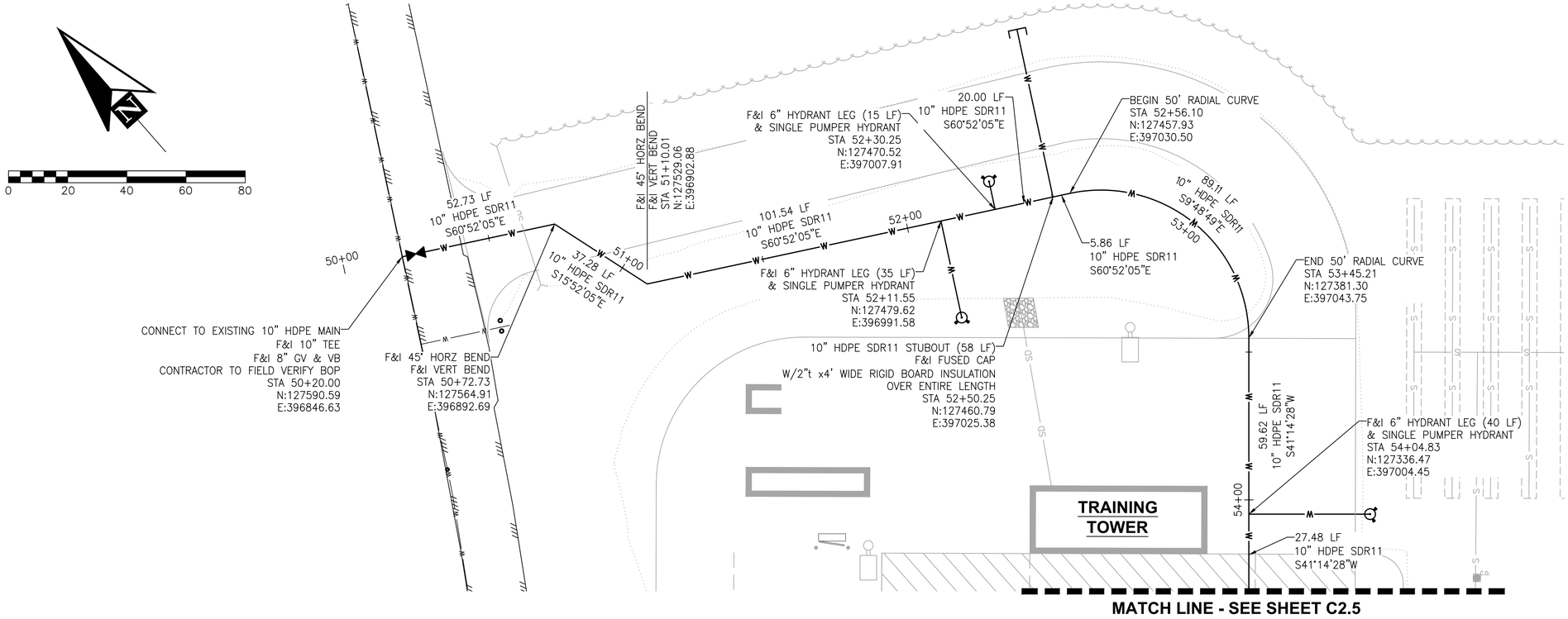

WATERLINE 4 PLAN

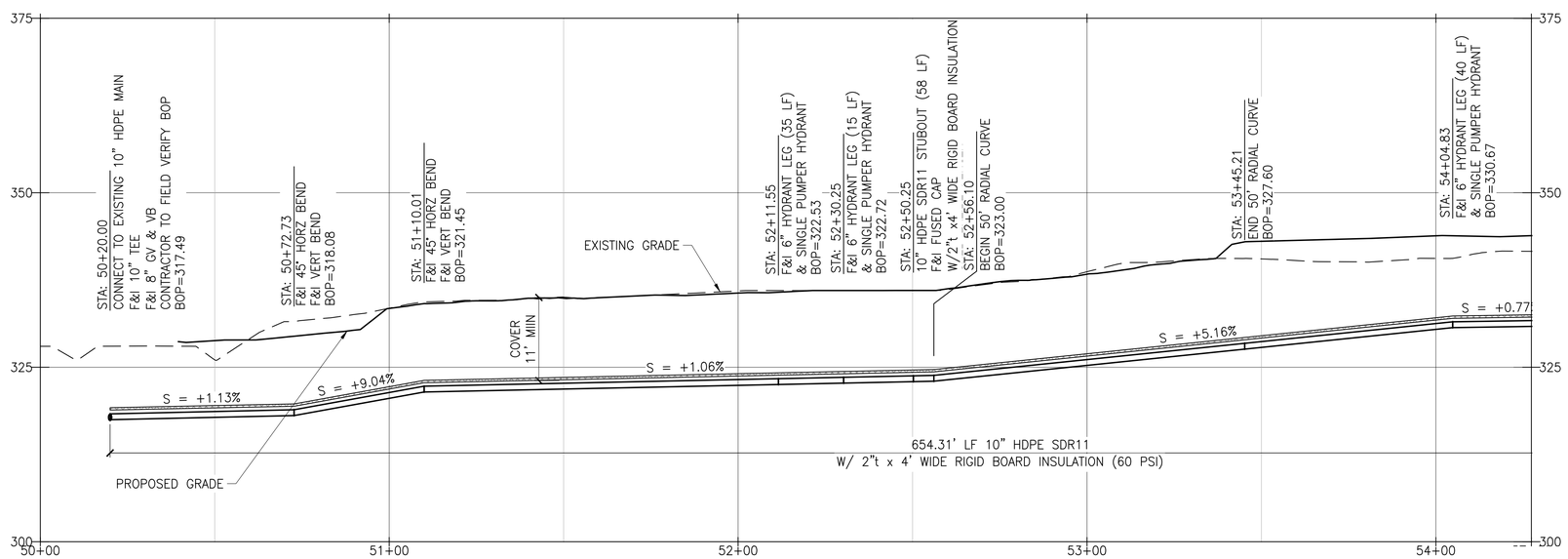

WATERLINE 4 PROFILE

SCALE: 1H:2V

STATE OF ALASKA
49TH
Douglas T. Kenley
CE-8176
5/9/18
REGISTERED PROFESSIONAL ENGINEER

Burkhart Croft
ARCHITECTS LLC
880 N Street Suite 302 | Anchorage Alaska 99501
T: 907.929.9334 | www.burkhart-croft.com

PND ENGINEERS, INC.
1506 WEST 36th AVENUE
ANCHORAGE, AK, 99503
PH 907.561.1011
WWW.PNDENGINEERS.COM

MATANUSKA-SUSITNA BOROUGH

MSB FIRE STATION 6-2

WASILLA, ALASKA

DATE:	5/9/18
DRAWN:	BA
CHECKED:	DTK
PROJECT:	1725
DRAWING TITLE:	Waterline 4 Plan & Profile
REVISIONS:	
SHEET NO:	C2.4

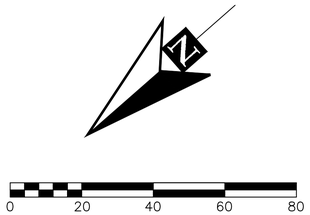

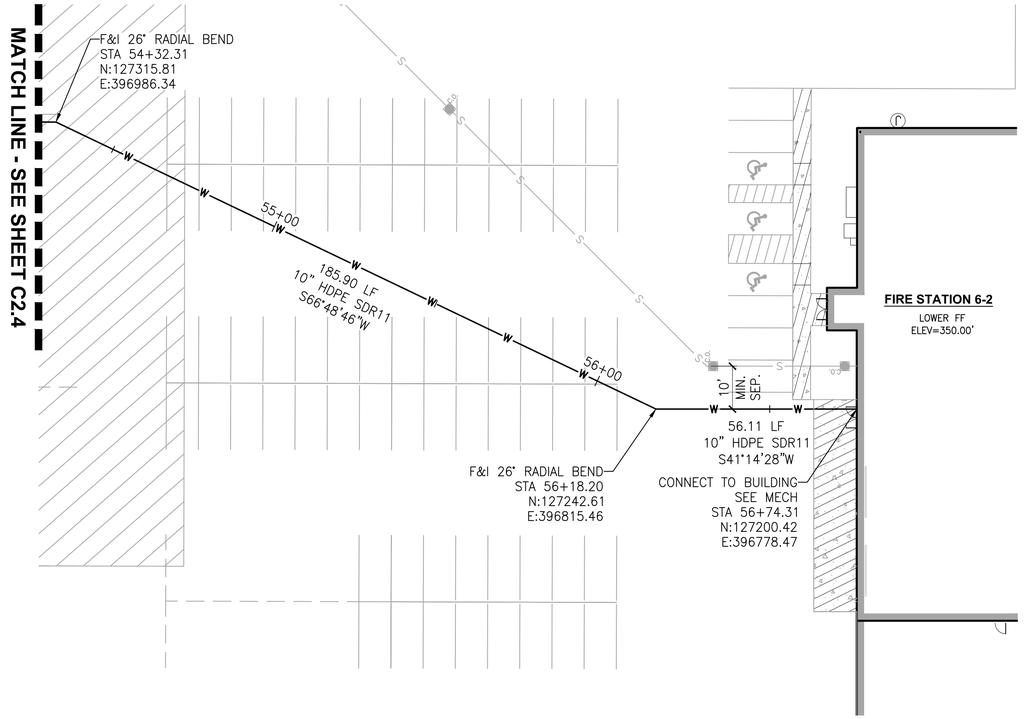

WATERLINE 4 PLAN

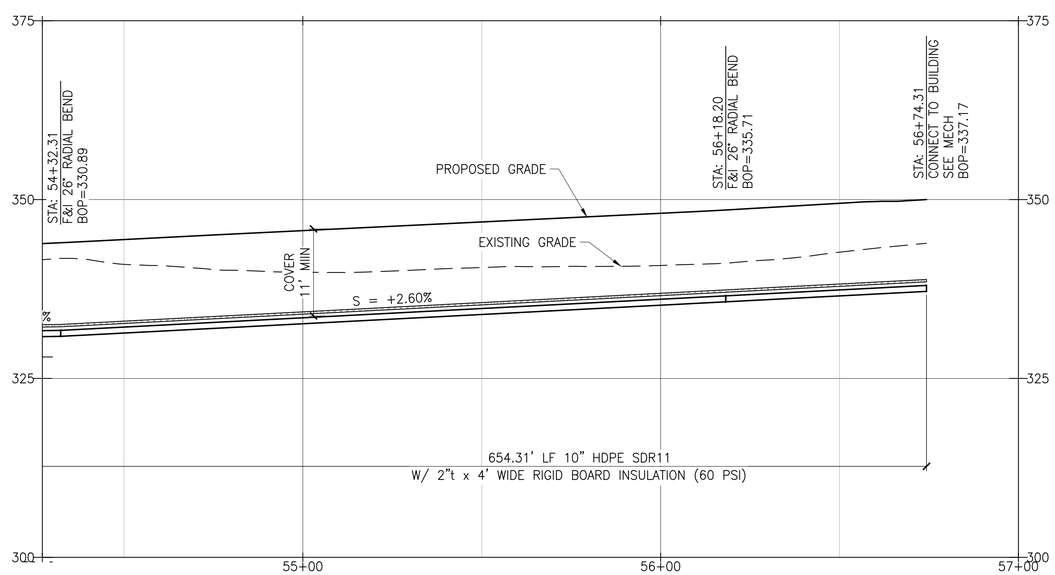

WATERLINE 4 PROFILE

SCALE: 1H:2V

STATE OF ALASKA
49 TH
Douglas T. Kenley
CE-8176
5/9/18
REGISTERED PROFESSIONAL ENGINEER

Burkhart Croft
ARCHITECTS LLC
880 N Street Suite 302 | Anchorage Alaska 99501
T: 907.929.9334 | www.burkhart-croft.com

PND
ENGINEERS, INC.
1506 WEST 36th AVENUE
ANCHORAGE, AK, 99503
PH 907.561.1011
WWW.PNDENGINEERS.COM

MATANUSKA-SUSITNA BOROUGH

MSB FIRE STATION 6-2

WASILLA, ALASKA

DATE:	5/9/18
DRAWN:	BA
CHECKED:	DTK
PROJECT:	1725
DRAWING TITLE:	Waterline 4 Plan & Profile
REVISIONS:	
SHEET NO:	C2.5

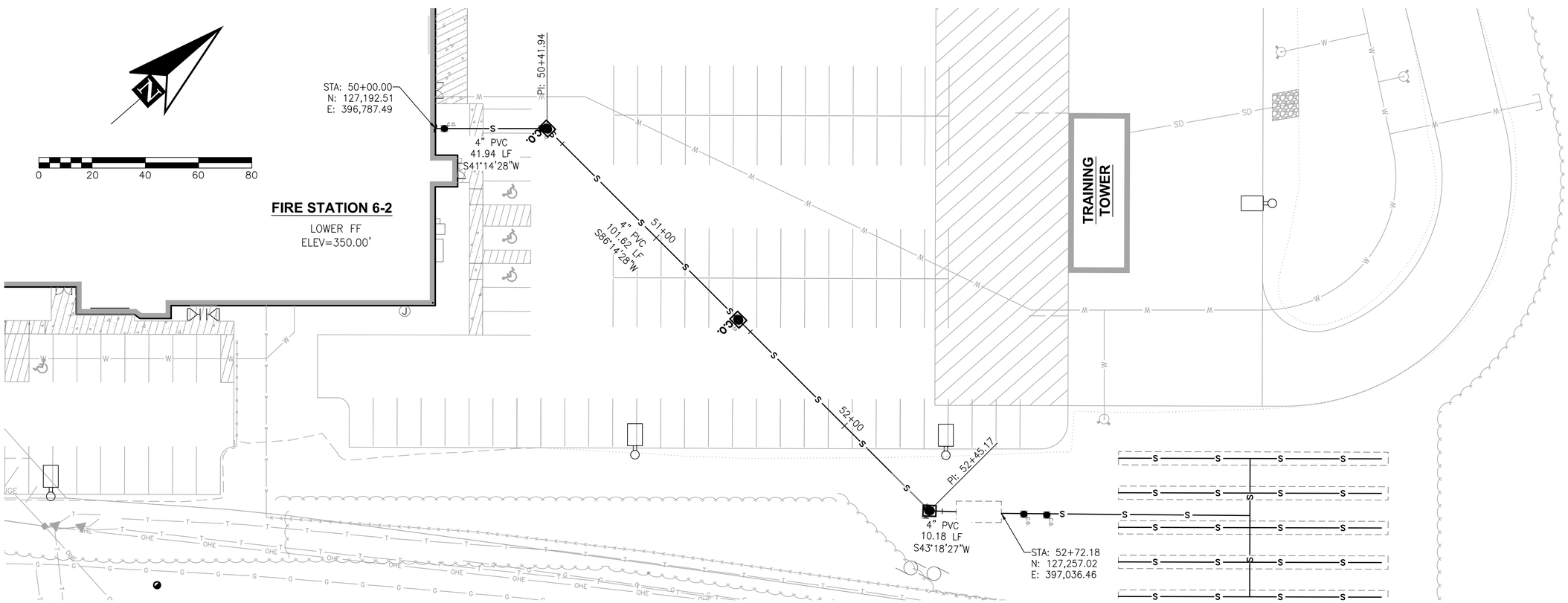

SEWER PLAN

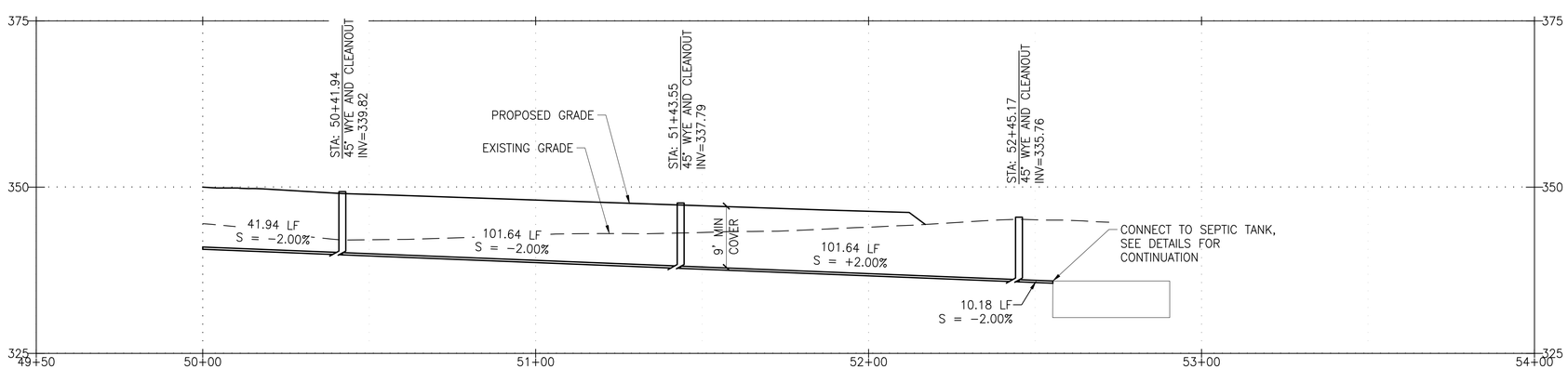

SEWER PROFILE

SCALE: 1H:2V

STATE OF ALASKA 49TH
Douglas T. Kenley
CE-8176
5/9/18
REGISTERED PROFESSIONAL ENGINEER

Burkhart Croft ARCHITECTS LLC
880 N Street Suite 302 | Anchorage Alaska 99501
T: 907.929.9334 | www.burkhart-croft.com

PND ENGINEERS, INC.
1506 WEST 36th AVENUE
ANCHORAGE, AK, 99503
PH 907.561.1011
WWW.PNDENGINEERS.COM

MATANUSKA-SUSITNA BOROUGH

MSB FIRE STATION 6-2

WASILLA, ALASKA

DATE: 5/9/18
DRAWN: BA
CHECKED: DTK
PROJECT: 1725
DRAWING TITLE: Sewer Plan and Profile
REVISIONS:
SHEET NO: C3.1

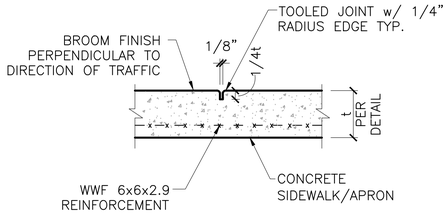

NOTES:
1. SPACE AT 5' O.C. OR AS SHOWN ON SITE/GRADING PLANS.

1 / C4.1 CONTROL JOINT DETAIL (CJ)

NTS

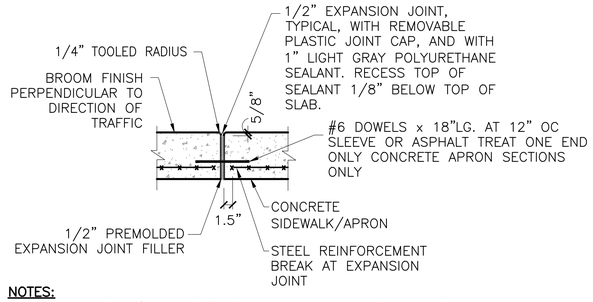

NOTES:
1. SPACING AT 20' O.C., BETWEEN CHANGE IN CONTROL JOINT GRIDS, AND AS SHOWN ON SITE/GRADING PLANS.
2. NEW SEALANT SHALL BE PROTECTED FROM VEHICLE AND PEDESTRIAN TRAFFIC UNTIL FULLY CURED PER SEALANT MANUFACTURES RECOMMENDATIONS.

2 / C4.1 EXPANSION JOINT DETAIL (EJ)

NTS

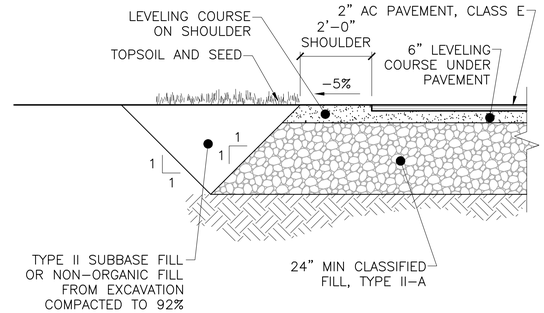

NOTES:
1. PRIOR TO PAVING APPLY TACK COAT TO ALL CONCRETE AND ASPHALT SURFACES THAT WILL BE IN CONTACT WITH NEW ASPHALT PAVEMENT.
2. REMOVE ALL ORGANICS AND PROOF ROLL SUBGRADE PRIOR TO FILL PLACEMENT.
3. COMPACT FILL TO 95% OF MAXIMUM DENSITY, ASTM D 1557.
4. SEE LANDSCAPE FOR TOPSOIL AND SEED REQUIREMENTS.

3 / C4.1 TYPICAL PAVEMENT SECTION (FILL)

NTS

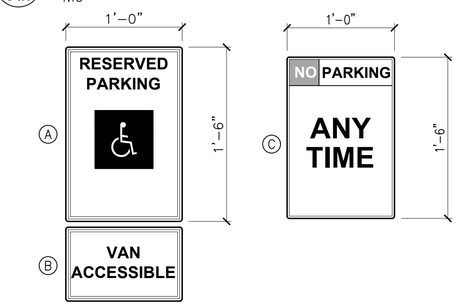

SIGN SCHEDULE			
SIGN#	DESCRIPTION	REFERENCE	QTY
A	RESERVED PARKING	R7-8	5
B	VAN ACCESSIBLE	R7-8a	3
C	NO PARKING ANY TIME	R7P-101	2
F	STOP SIGN	R1-1	1

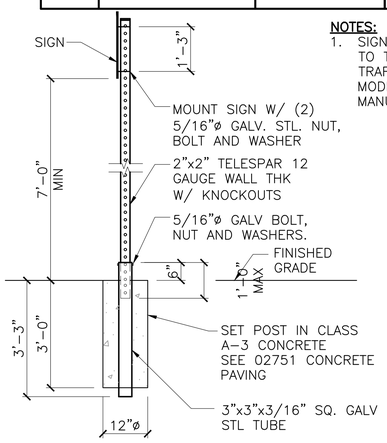

NOTES:
1. SIGN REFERENCES ARE ACCORDING TO THE MANUAL ON UNIFORM TRAFFIC CONTROL DEVICES AS MODIFIED BY THE ALASKA TRAFFIC MANUAL.

4 / C4.1 SIGN DETAILS AND SCHEDULE

NTS

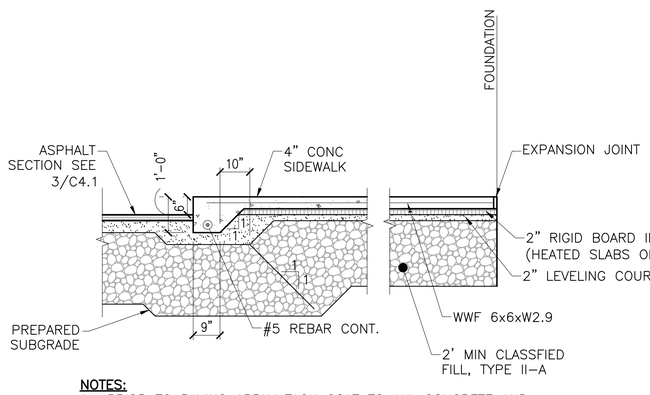

NOTES:
1. PRIOR TO PAVING APPLY TACK COAT TO ALL CONCRETE AND ASPHALT SURFACES THAT WILL BE IN CONTACT WITH NEW ASPHALT PAVEMENT.
2. SEE MECHANICAL FOR SLAB HEATING REQUIREMENTS

5 / C4.1 THICKENED EDGE CONCRETE SIDEWALK SECTION

NTS

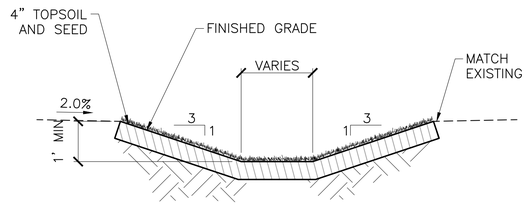

6 / C4.1 SWALE SECTION

NTS

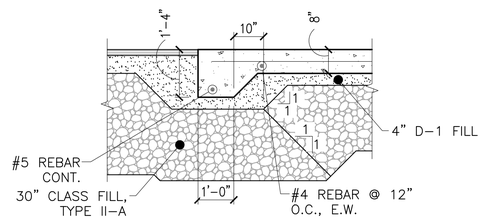

7 / C4.1 APPARATUS PARKING SLAB

NTS

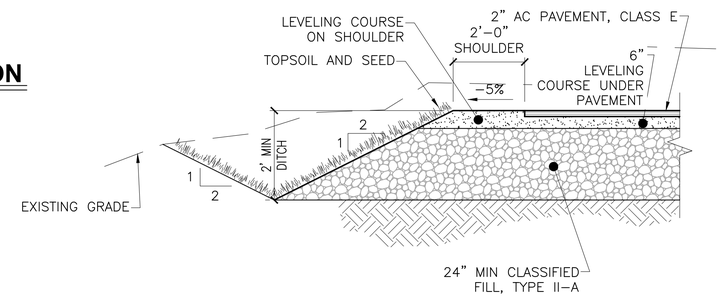

NOTES:
1. PRIOR TO PAVING APPLY TACK COAT TO ALL CONCRETE AND ASPHALT SURFACES THAT WILL BE IN CONTACT WITH NEW ASPHALT PAVEMENT.
2. REMOVE ALL ORGANICS AND PROOF ROLL SUBGRADE PRIOR TO FILL PLACEMENT.
3. COMPACT FILL TO 95% OF MAXIMUM DENSITY, ASTM D 1557.
4. SEE LANDSCAPE FOR TOPSOIL AND SEED REQUIREMENTS.

8 / C4.1 TYPICAL PAVEMENT SECTION (CUT)

NTS

STATE OF ALASKA 49TH Douglas T. Kenley CE-8176 5/9/18 REGISTERED PROFESSIONAL ENGINEER

Burkhart Croft ARCHITECTS LLC
880 N Street Suite 302 | Anchorage Alaska 99501
T: 907.929.9334 | www.burkhart-croft.com

PND ENGINEERS, INC.
1506 WEST 36th AVENUE
ANCHORAGE, AK, 99503
PH 907.561.1011
WWW.PNDENGINEERS.COM

MATANUSKA-SUSITNA BOROUGH

MSB FIRE STATION 6-2

WASILLA, ALASKA

DATE: 5/9/18
DRAWN: BA
CHECKED: DTK
PROJECT: 1725
DRAWING TITLE: **DETAILS**
REVISIONS:
SHEET NO: **C4.1**

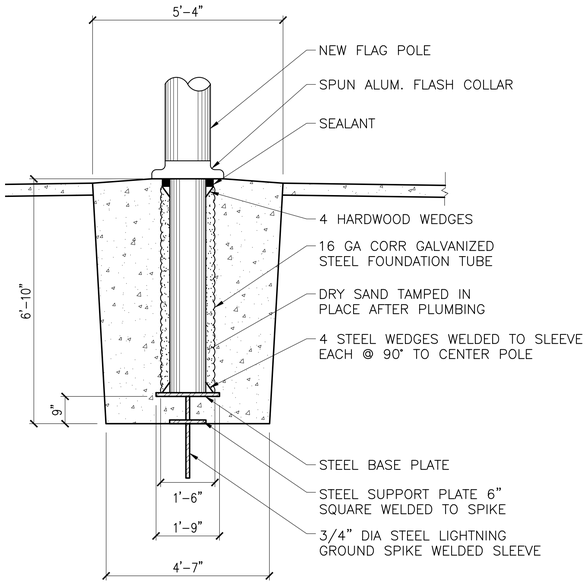

1 / C4.2 FLAGPOLE BASE DETAIL

NTS

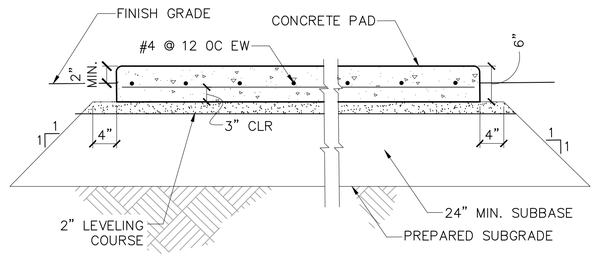

PAD USE	SIZE	CONTROL JOINT SPACING
GENERATOR	PER ELECTRICAL	5' MAX, E.W.
LOAD BANK	PER ELECTRICAL	5' MAX, E.W.

NOTES:
1. COORDINATE ALL SIZES AND LOCATIONS WITH ELECTRICAL AND MECHANICAL.

2 / C4.2 CONCRETE PAD DETAIL

NTS

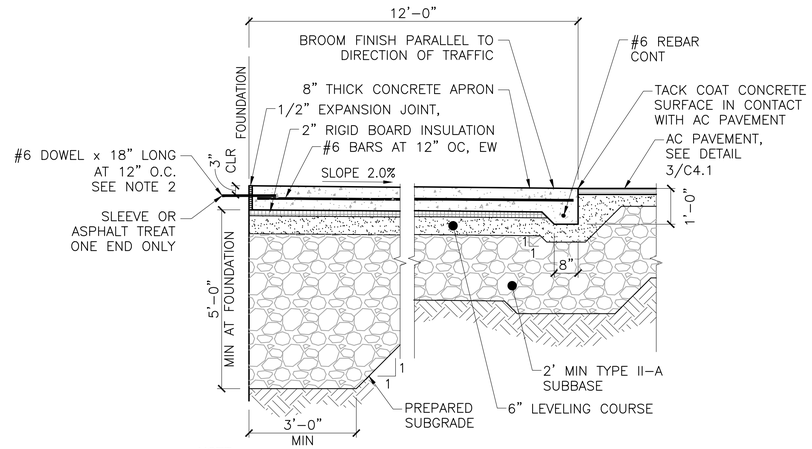

NOTE:
1. INSTALL CONCRETE CONTROL JOINTS AT 12' MAXIMUM O.C. AND EXPANSION JOINTS AT 24' O.C. MAXIMUM SIMILAR TO DETAILS 1 AND 2/C4.1
2. COORDINATE DOWEL PLACEMENT WITH FOUNDATION REINFORCEMENT, SEE STRUCTURAL.
3. SEE MECHANICAL DRAWINGS FOR SLAB HEAT REQUIREMENTS.

3 / C4.2 TYP 8" CONCRETE APRON SECTION

NTS

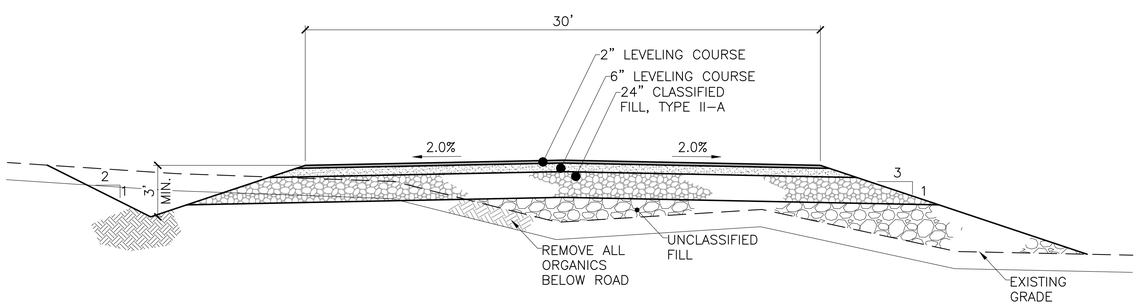

4 / C4.2 TYP DRIVEWAY SECTION

NTS

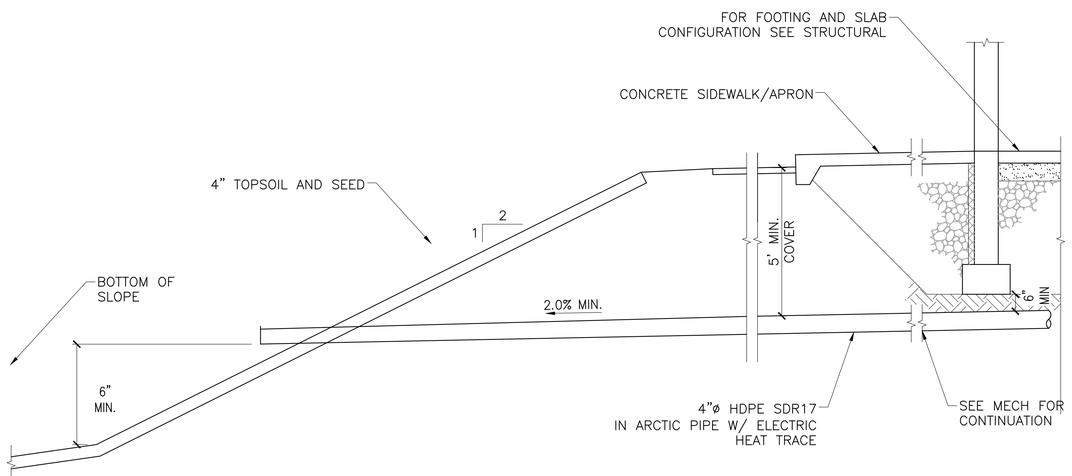

5 / C4.2 O/W SEPARATOR DRAIN/RAIN LEADER DETAIL

NTS

STATE OF ALASKA 49TH Douglas T. Kenley CE-8176 5/9/18 REGISTERED PROFESSIONAL ENGINEER

Burkhart Croft ARCHITECTS LLC
880 N Street Suite 302 | Anchorage Alaska 99501
T: 907.929.9334 | www.burkhart-croft.com

PND ENGINEERS, INC.
1506 WEST 36th AVENUE
ANCHORAGE, AK, 99503
PH 907.561.1011
WWW.PNDENGINEERS.COM

MATANUSKA-SUSITNA BOROUGH

MSB FIRE STATION 6-2

WASILLA, ALASKA

DATE: 5/9/18
DRAWN: BA
CHECKED: DTK
PROJECT: 1725
DRAWING TITLE: **DETAILS**
REVISIONS:
SHEET NO: **C4.2**

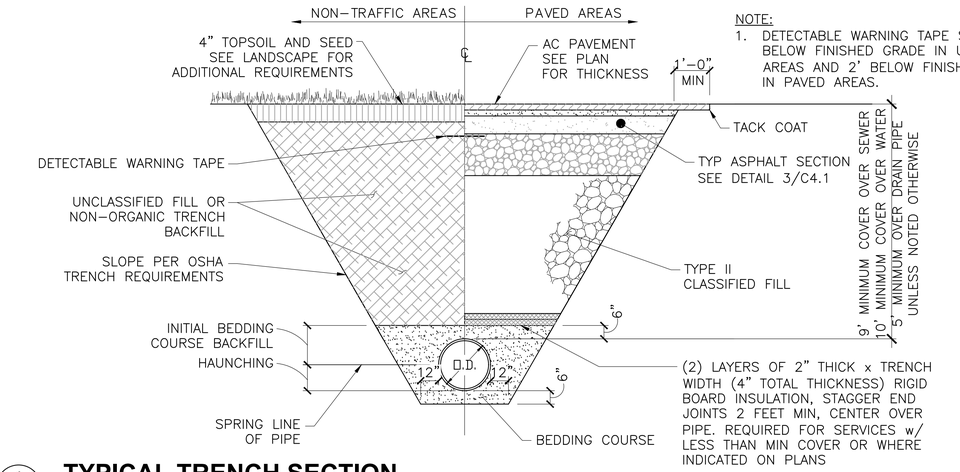

NOTE:
1. DETECTABLE WARNING TAPE SHALL BE 3' BELOW FINISHED GRADE IN UNPAVED AREAS AND 2' BELOW FINISHED GRADE IN PAVED AREAS.

1 / C4.3 TYPICAL TRENCH SECTION

NTS

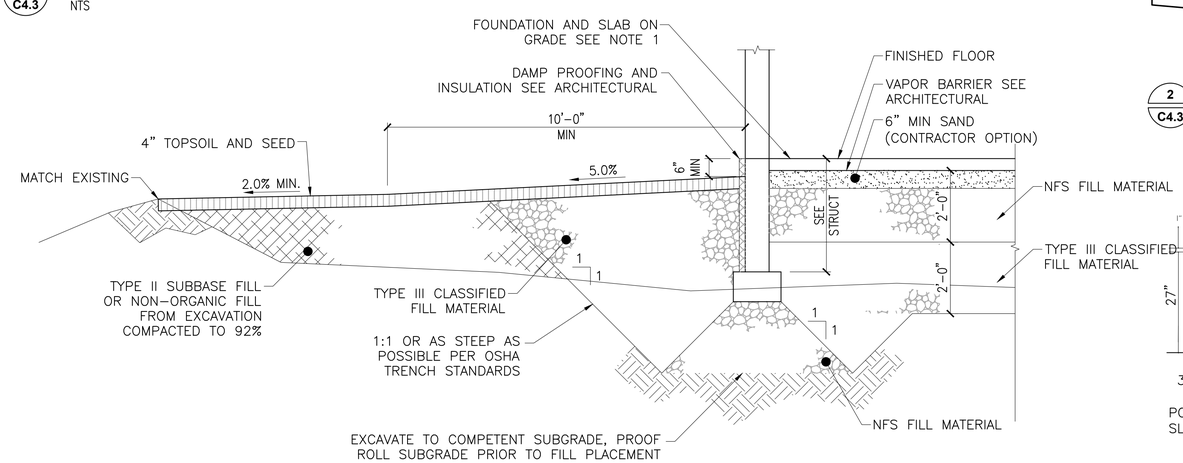

NOTES:
1. SEE STRUCTURAL PLANS FOR ACTUAL SIZE OF FOUNDATIONS AND WALL HEIGHTS.
2. ENGINEER TO INSPECT SUBGRADE PRIOR TO PLACEMENT OF FILL.

3 / C4.3 TYP FOOTING SECTION

NTS

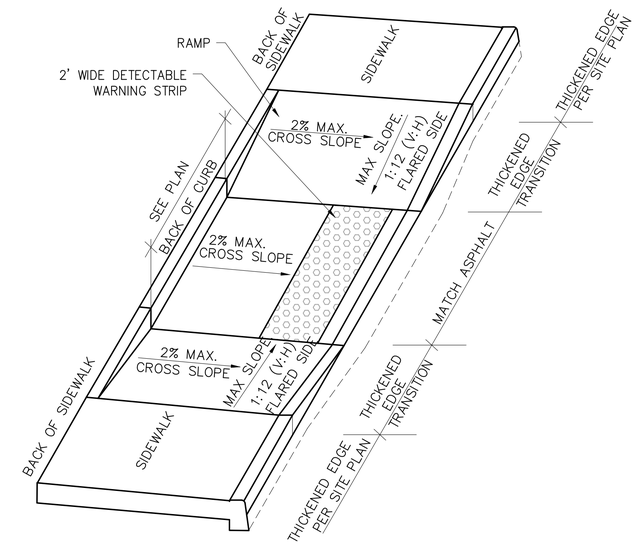

2 / C4.3 PARALLEL CURB RAMP

NTS

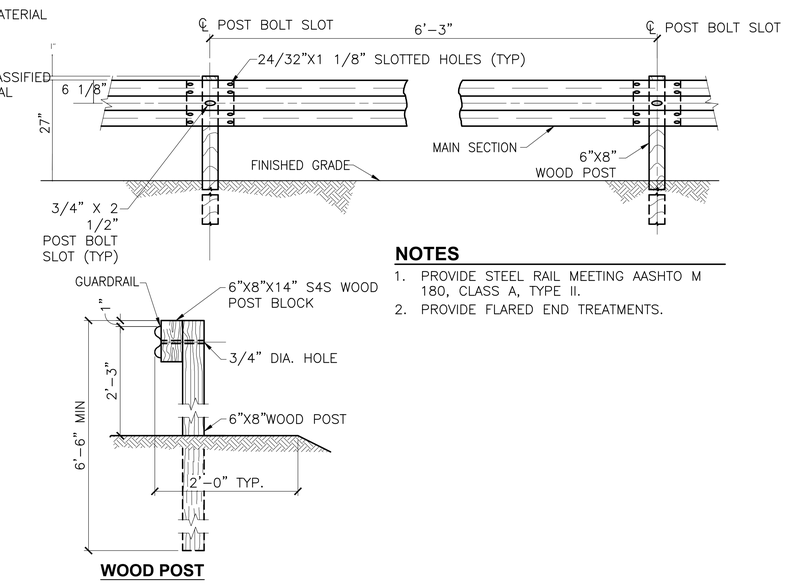

NOTES
1. PROVIDE STEEL RAIL MEETING AASHTO M 180, CLASS A, TYPE II.
2. PROVIDE FLARED END TREATMENTS.

4 / C4.3 POST AND RAILING DETAILS

NTS

STATE OF ALASKA 49TH Douglas T. Kenley CE-8176 5/9/19 REGISTERED PROFESSIONAL ENGINEER

Burkhart Croft ARCHITECTS LLC
880 N Street Suite 302 | Anchorage Alaska 99501
T: 907.929.9334 | www.burkhart-croft.com

PND ENGINEERS, INC.
1506 WEST 36th AVENUE
ANCHORAGE, AK, 99503
PH 907.561.1011
WWW.PNDENGINEERS.COM

MATANUSKA-SUSITNA BOROUGH

MSB FIRE STATION 6-2

WASILLA, ALASKA

DATE: 5/9/18
DRAWN: BA
CHECKED: DTK
PROJECT: 1725
DRAWING TITLE: **DETAILS**
REVISIONS:
SHEET NO: **C4.3**

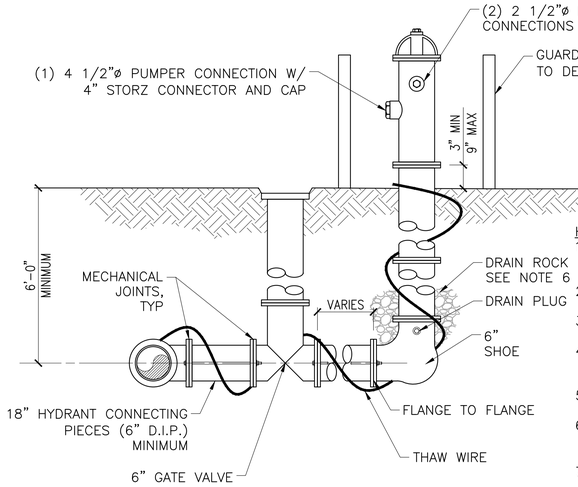

HYDRANT INSTALLATION NOTES:

1. HYDRANT BARREL MUST BE INSTALLED PLUMB AND THE LEG MUST BE INSTALLED LEVEL
2. DRAIN PLUG TO BE REMOVED BY CONTRACTOR
3. ALL HYDRANTS SHALL BE PAINTED FIRE RED.
4. AUXILIARY GATE VALVE BOX TO BE INSTALLED ACCORDING TO TYPICAL VALVE BOX DETAIL.
5. ALL JOINTS SHALL BE RESTRAINED.
6. PROVIDE A MINIMUM OF 1 CUBIC YARD OF DRAIN ROCK TO 6" ABOVE DRAIN PLUG.
7. HYDRANT SHALL BE LEFT HAND OPENING (COUNTERCLOCKWISE).

1 / C4.4 SINGLE PUMPER "L" BASE HYDRANT ASSEMBLY

NTS

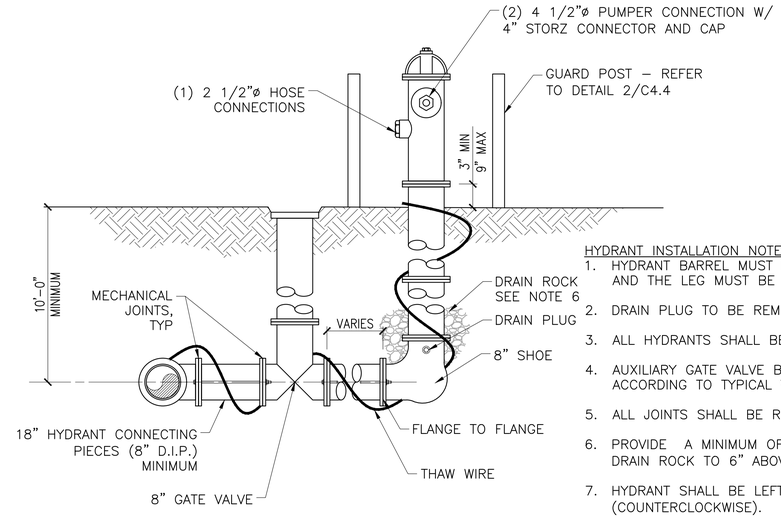

HYDRANT INSTALLATION NOTES:

1. HYDRANT BARREL MUST BE INSTALLED PLUMB AND THE LEG MUST BE INSTALLED LEVEL
2. DRAIN PLUG TO BE REMOVED BY CONTRACTOR
3. ALL HYDRANTS SHALL BE PAINTED FIRE RED.
4. AUXILIARY GATE VALVE BOX TO BE INSTALLED ACCORDING TO TYPICAL VALVE BOX DETAIL.
5. ALL JOINTS SHALL BE RESTRAINED.
6. PROVIDE A MINIMUM OF 1 CUBIC YARD OF DRAIN ROCK TO 6" ABOVE DRAIN PLUG.
7. HYDRANT SHALL BE LEFT HAND OPENING (COUNTERCLOCKWISE).

2 / C4.4 DOUBLE PUMPER "L" BASE HYDRANT ASSEMBLY

NTS

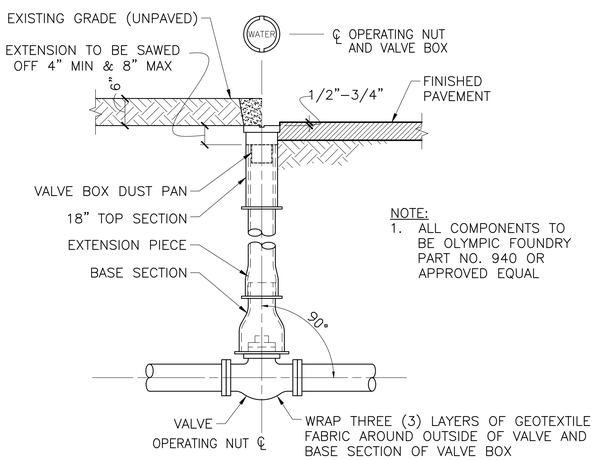

NOTE:

1. ALL COMPONENTS TO BE OLYMPIC FOUNDRY PART NO. 940 OR APPROVED EQUAL

3 / C4.4 TYPICAL VALVE BOX

NTS

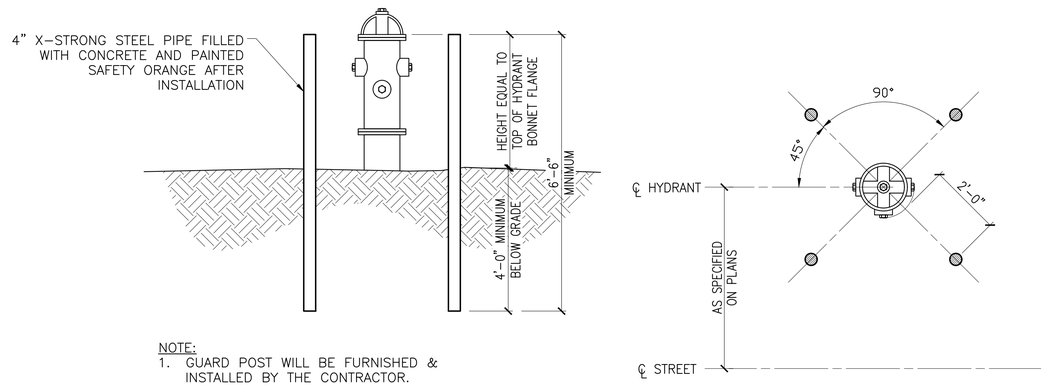

NOTE:

1. GUARD POST WILL BE FURNISHED & INSTALLED BY THE CONTRACTOR.
2. POSTS SHALL BE LOCATED TO ALLOW UNRESTRICTED ACCESS TO PUMPER AND HOSE CONNECTIONS.

4 / C4.4 HYDRANT GUARD POSTS

NTS

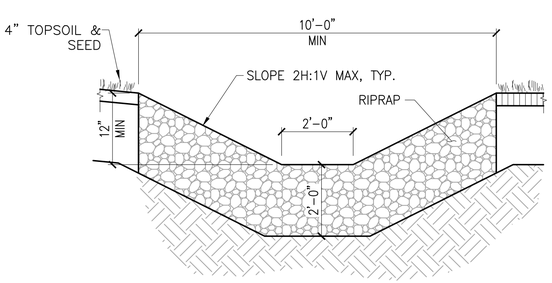

WEIGHT	% LIGHTER
50	90–100
25	0–50

RIPRAP GRADATION

5 / C4.4 ROCK LINED DITCH

NTS

STATE OF ALASKA 49TH Douglas T. Kenley CE-8176 5/9/18 REGISTERED PROFESSIONAL ENGINEER

Burkhart Croft ARCHITECTS LLC
880 N Street Suite 302 | Anchorage Alaska 99501
T: 907.929.9334 | www.burkhart-croft.com

PND ENGINEERS, INC.
1506 WEST 36th AVENUE
ANCHORAGE, AK, 99503
PH 907.561.1011
WWW.PNDENGINEERS.COM

MATANUSKA-SUSITNA BOROUGH

MSB FIRE STATION 6-2

WASILLA, ALASKA

DATE: 5/9/18

DRAWN: BA

CHECKED: DTK

PROJECT: 1725

DRAWING TITLE: **DETAILS**

REVISIONS:

SHEET NO: **C4.4**

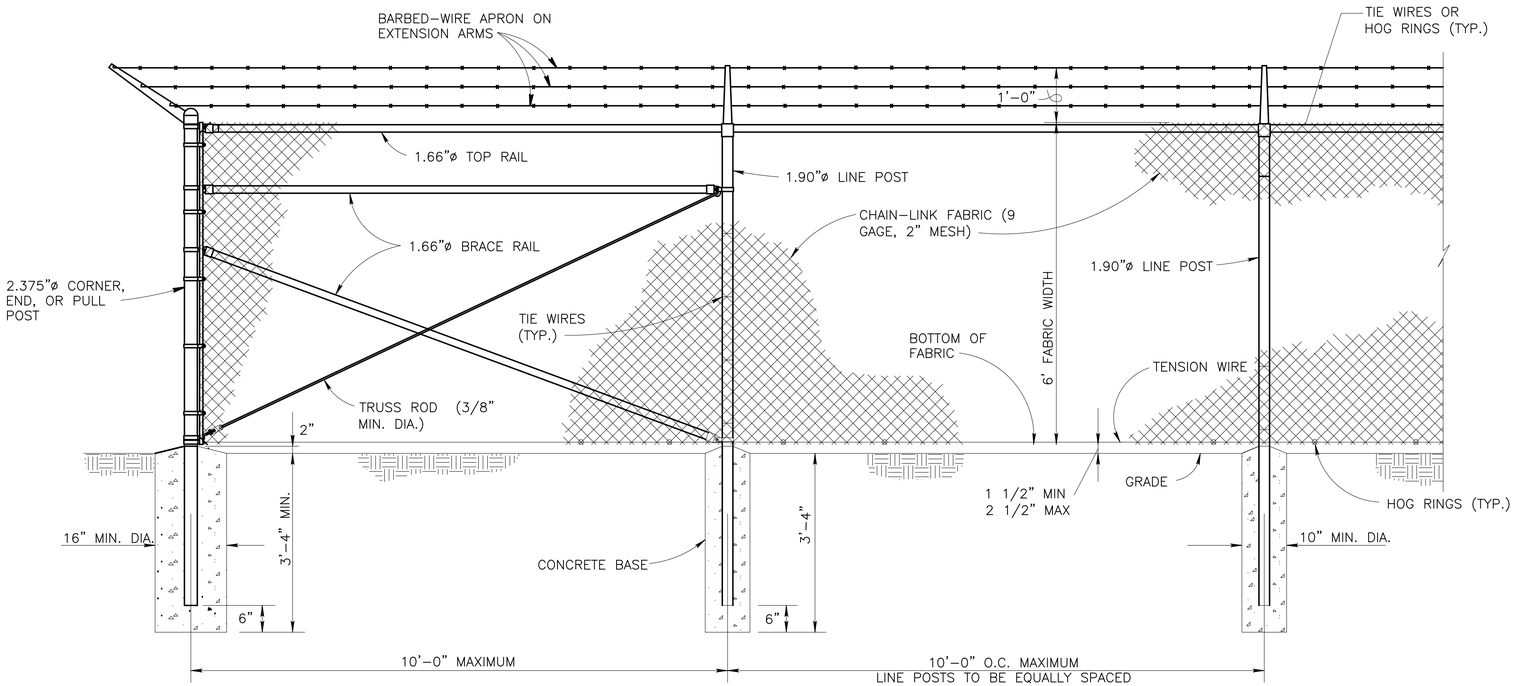

1 / C4.5 CHAIN LINK SECURITY FENCE DETAIL

NTS

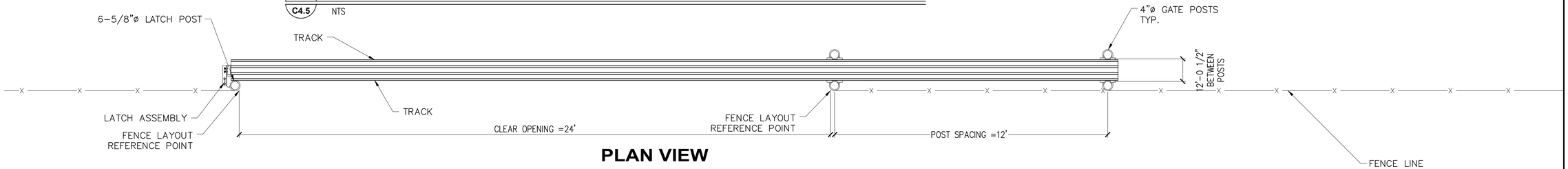

PLAN VIEW

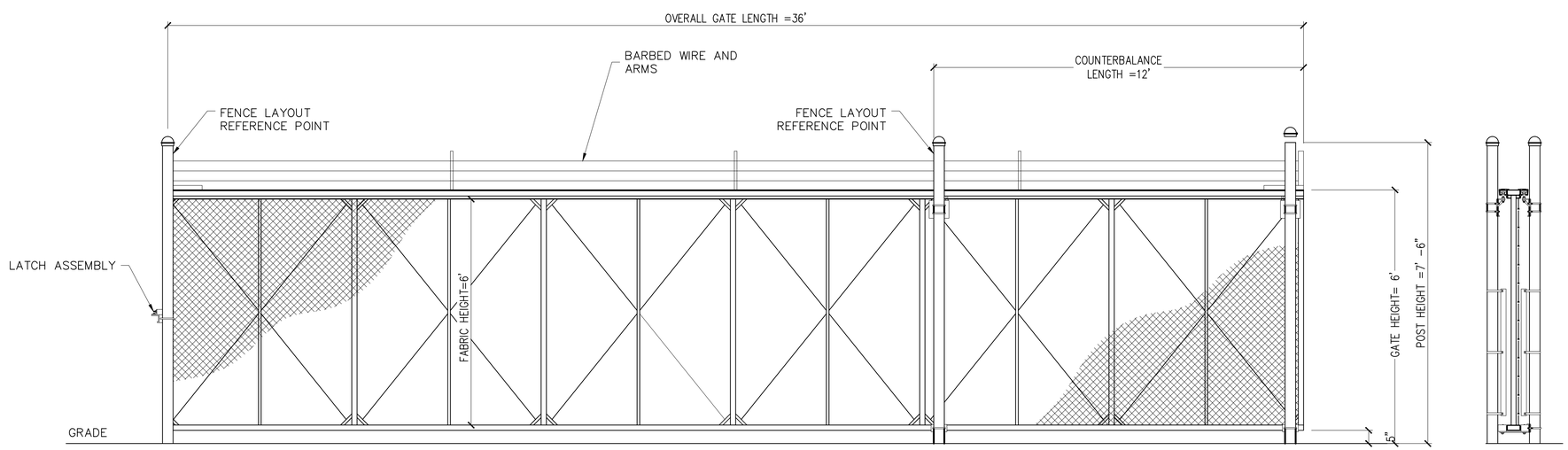

ELEVATION

SECTION

NOTES:
1. FOOTINGS SHALL BE PER MANUFACTURER'S RECOMMENDATIONS.
2. GATES SHALL BE PROVIDED WITH AN ELECTRIC GATE OPENER.

2 / C4.5 CANTILEVER FENCE GATE

NTS

STATE OF ALASKA 49TH Douglas T. Kenley CE-8176 5/9/18 REGISTERED PROFESSIONAL ENGINEER

Burkhart Croft ARCHITECTS LLC
880 N Street Suite 302 | Anchorage Alaska 99501
T: 907.929.9334 | www.burkhart-croft.com

PND ENGINEERS, INC.
1506 WEST 36th AVENUE
ANCHORAGE, AK, 99503
PH 907.561.1011
WWW.PNDENGINEERS.COM

MATANUSKA-SUSITNA BOROUGH

MSB FIRE STATION 6-2

WASILLA, ALASKA

DATE: 5/9/18
DRAWN: BA
CHECKED: DTK
PROJECT: 1725
DRAWING TITLE: **DETAILS**
REVISIONS:
SHEET NO: **C4.5**

SHEET NOTES:

1. CONTRACTOR SHALL PROVIDE ASBUILT DRAWINGS SHOWING DETAILED LAYOUT OF ALL SEPTIC SYSTEM COMPONENTS INCLUDING SEPTIC TANK AND ABSORPTION SYSTEM.
2. PROVIDE 2 CHAMBER SEPTIC TANK WITH ORENCO PF5005 DUPLEX LIFT STATION OR ENGINEER APPROVED EQUAL. PROVIDE 24" MANHOLE ACCESS RISER TO SURFACE. TANK SHALL BE COATED INSIDE AND OUT WITH COAL TAR PITCH.
3. INSTALL ONE MONITORING TUBE AT EACH CORNER OF ABSORPTION FIELD.
4. INSTALL SEPTIC SYSTEM SUCH THAT ALL SEPTIC SYSTEM COMPONENTS ARE OUTSIDE THE 200' WELL PROTECTIVE RADIUS. SHOWN ON THE PLANS.
5. PROVIDE ANCHORS ON TANK TO RESIST GROUNDWATER BUOYANCY. ANCHORS ARE (4) 2'x6'x2' BLOCKS STRAPPED TO TANK

ABSORPTION FIELD:

PURPOSE:	ON-SITE WASTEWATER DISPOSAL SYSTEM
USAGE:	SYSTEM IS DESIGNED TO SERVE A NEW FIRE STATION (ASSUME 70 CADETS, 10 OFFICE STAFF AND 12 FIREMEN AND 200 VISITORS.) TOTAL 292 PEOPLE.
SIZING CRITERIA:	(292) PERSONS TOTAL ASSUME 75 GAL/DAY/FIREMEN, 15 GAL/DAY/STAFF AND 4 GAL/DAY/VISITOR FOR A TOTAL OF 2900 GALLONS/DAY
SOIL TYPE:	SAND WITH GRAVEL -- 60% MIN. SAND
PERCOLATION RATE:	GREATER THAN 1 MIN./INCH
APPLICATION RATE:	0.83 SF/GAL/DAY
AREA REQUIRED:	2900 GAL. / 0.6 SF/GAL./DAY x .5 REDUCTION FACTOR =2400 S.F. TOTAL REQUIRED (USE 2500 S.F.)

DESIGN:

- CALCULATION METHOD OBTAINED FROM ALASKA DEPARTMENT OF ENVIRONMENTAL CONSERVATION, RESIDENTIAL ONSITE SEWER INSTALLATION REFERENCE FOR CERTIFIED INSTALLERS AND HOMEOWNERS, MOST CURRENT EDITION
- NOTE: FOR APPLICABLE EXCAVATION, TRENCHING, AND SHORING SAFETY STANDARDS, CONTACT THE STATE OF ALASKA. DEPARTMENT OF LABOR, OCCUPATIONAL SAFETY AND HEALTH COMPLIANCE, CONSULTATION, AND TRAINING DIVISION OF LABOR STANDARDS AND SAFETY AT 264-2599 OR 264-2597.

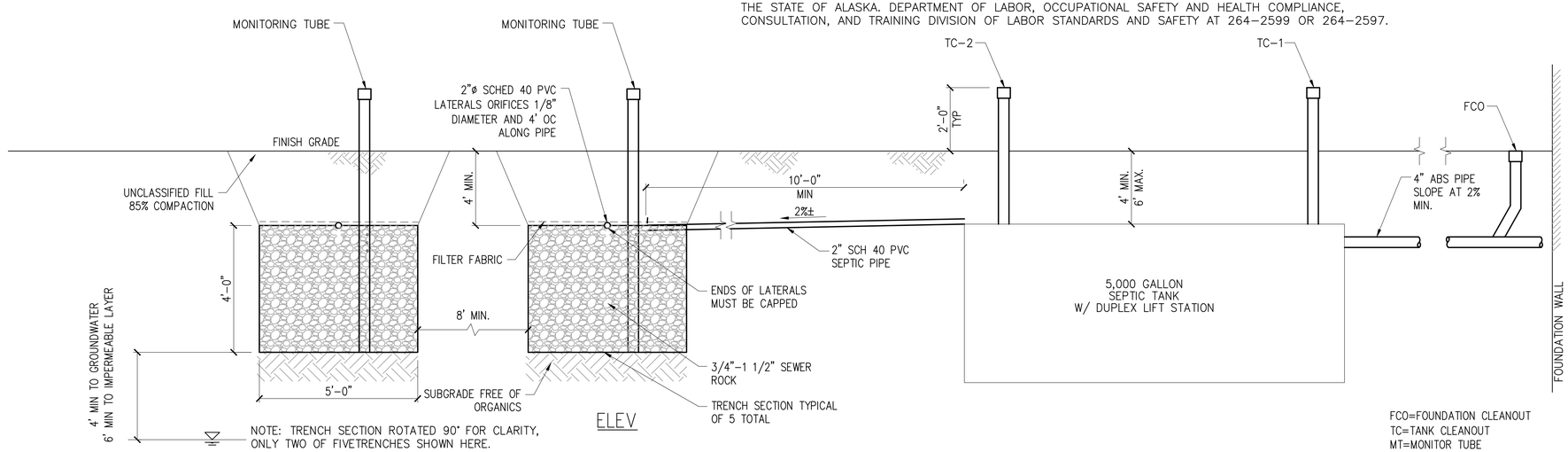

1 C4.6 **ABSORPTION SYSTEM SECTION**

NTS

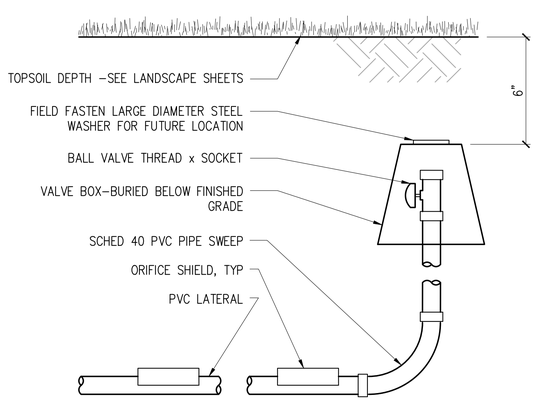

2 C4.6 **DRAIN FIELD LATERAL TYPICAL TERMINATION**

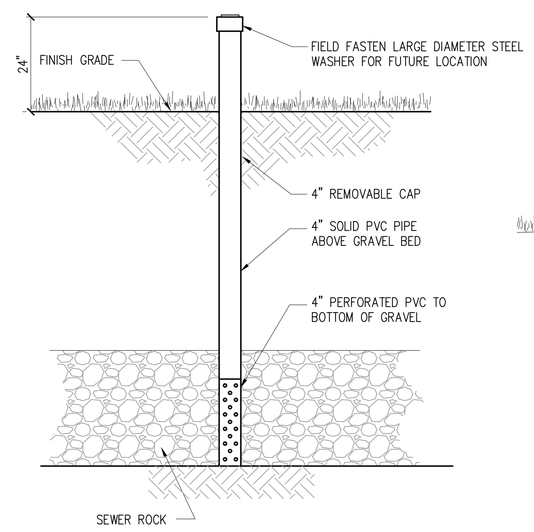

3 C4.6 **MONITOR TUBE**

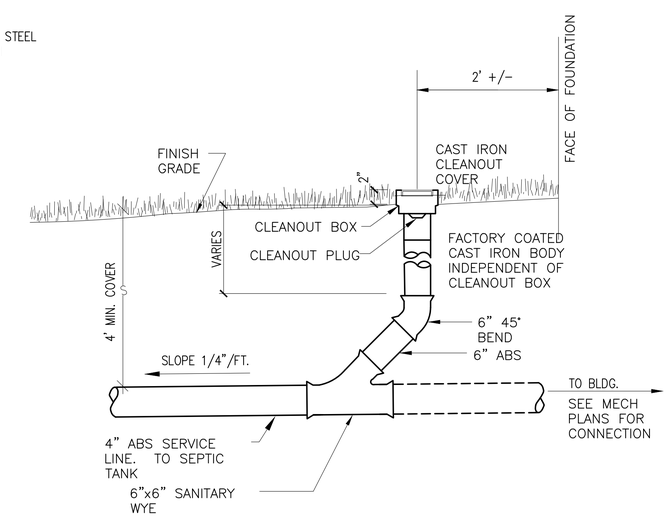

4 C4.6 **SEWER CLEANOUT & CONN**

STATE OF ALASKA 49TH Douglas T. Kenley CE-8176 5/9/18 REGISTERED PROFESSIONAL ENGINEER

Burkhart Croft ARCHITECTS LLC
880 N Street Suite 302 | Anchorage Alaska 99501
T: 907.929.9334 | www.burkhart-croft.com

PND ENGINEERS, INC.
1506 WEST 36th AVENUE
ANCHORAGE, AK. 99503
PH 907.561.1011
WWW.PNDENGINEERS.COM

MATANUSKA-SUSITNA BOROUGH

MSB FIRE STATION 6-2

WASILLA, ALASKA

DATE:	5/9/18
DRAWN:	BA
CHECKED:	DTK
PROJECT:	1725
DRAWING TITLE:	**SEPTIC DETAILS**
REVISIONS:	
SHEET NO:	**C4.6**

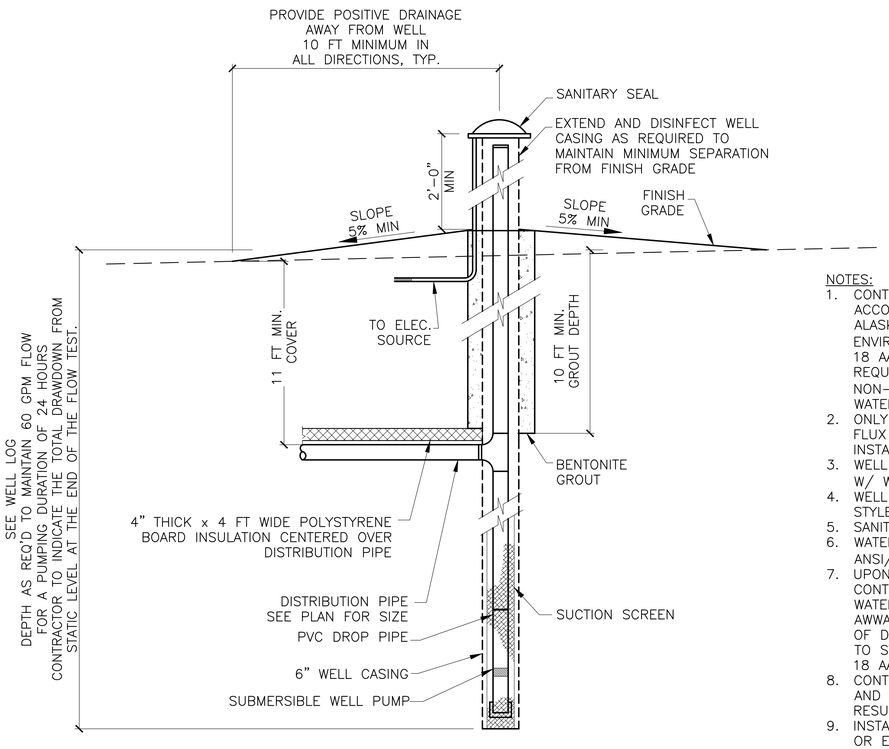

NOTES:

1. CONTRACTOR SHALL INSTALL WELL IN ACCORDANCE WITH THE STATE OF ALASKA DEPARTMENT OF ENVIRONMENTAL CONSERVATION (ADEC) 18 AAC 80 DRINKING WATER REQUIREMENTS FOR A TRANSIENT NON-COMMUNITY (TNCWS) PUBLIC WATER SYSTEM.
2. ONLY LEAD-FREE PIPE, SOLDER, OR FLUX SHALL BE USED IN THE INSTALLATION OF THE WATER SYSTEM.
3. WELL CASING: SCH 40 GRADE B STEEL W/ WELDED JOINTS.
4. WELL CAP: MAASS-MIDWEST-DICKEN STYLE WTCC OR EQUAL.
5. SANITARY SEAL: BENTONITE GROUT.
6. WATER SYSTEM SHALL CONFORM TO ANSI/NSF STANDARD 61 REQUIREMENTS.
7. UPON COMPLETION OF CONSTRUCTION, CONTRACTOR SHALL DISINFECT THE WATER LINES IN ACCORDANCE WITH AWWA STANDARD C651, WITH DISCHARGE OF DISINFECTANT WATER CONFORMING TO STATE WATER QUALITY STANDARDS 18 AAC 70.
8. CONTRACTOR SHALL PROVIDE TESTING AND SUBMIT ALL WATER QUALITY TEST RESULTS TO THE ENGINEER.
9. INSTALL 30HP-12HB RED JACKET PUMP OR ENGINEER APPROVED EQUAL IN EXISTING WELL.
10. INSTALL 5HP-13FC RED JACKET PUMP OR ENGINEER APPROVED EQUAL IN NEW WELL.

1 / C4.7 **WELL DETAIL**

STATE OF ALASKA 49TH Douglas T. Kenley CE-8176 5/9/18 REGISTERED PROFESSIONAL ENGINEER

Burkhart Croft ARCHITECTS LLC
880 N Street Suite 302 | Anchorage Alaska 99501
T: 907.929.9334 | www.burkhart-croft.com

PND ENGINEERS, INC.
1506 WEST 36th AVENUE
ANCHORAGE, AK, 99503
PH 907.561.1011
WWW.PNDENGINEERS.COM

MATANUSKA-SUSITNA BOROUGH

MSB FIRE STATION 6-2

WASILLA, ALASKA

DATE: 5/9/18
DRAWN: BA
CHECKED: DTK
PROJECT: 1725
DRAWING TITLE: **WATER DETAILS**
REVISIONS:
SHEET NO: **C4.7**

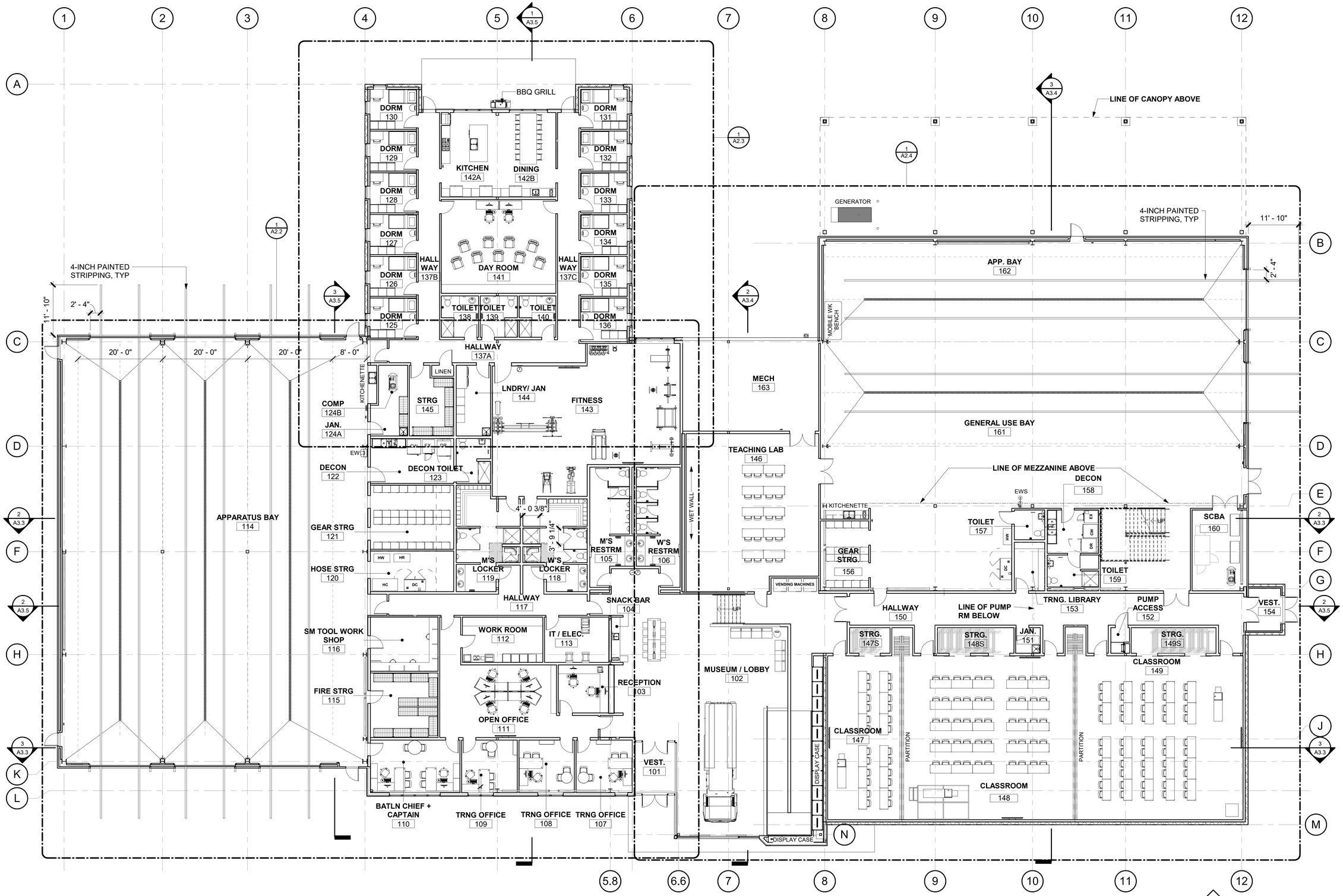

1 FIRST FLOOR REFERENCE PLAN
1" = 12'-0"

STATE OF ALASKA 49TH
DAVE JAMES DREHER
A-14794
Registered Professional Architect
5/9/18

Burkhart Croft ARCHITECTS LLC
880 N Street Suite 302 | Anchorage Alaska 99501
T: 907.929.9334 | www.burkhart-croft.com

MATANUSKA-SUSITNA BOROUGH

MSB FIRE STATION 6-2

WASILLA, ALASKA

DATE:	5/9/2018
DRAWN:	JKJ
CHECKED:	JBC
PROJECT:	1725
DRAWING TITLE:	REFERENCE FLOOR PLAN
REVISIONS:	
SHEET NO:	A2.1

FLOOR PLAN NOTES

1. ALL FF&E ITEMS SHOWN ON DRAWINGS ARE CFCI UNLESS NOTED OTHERWISE.

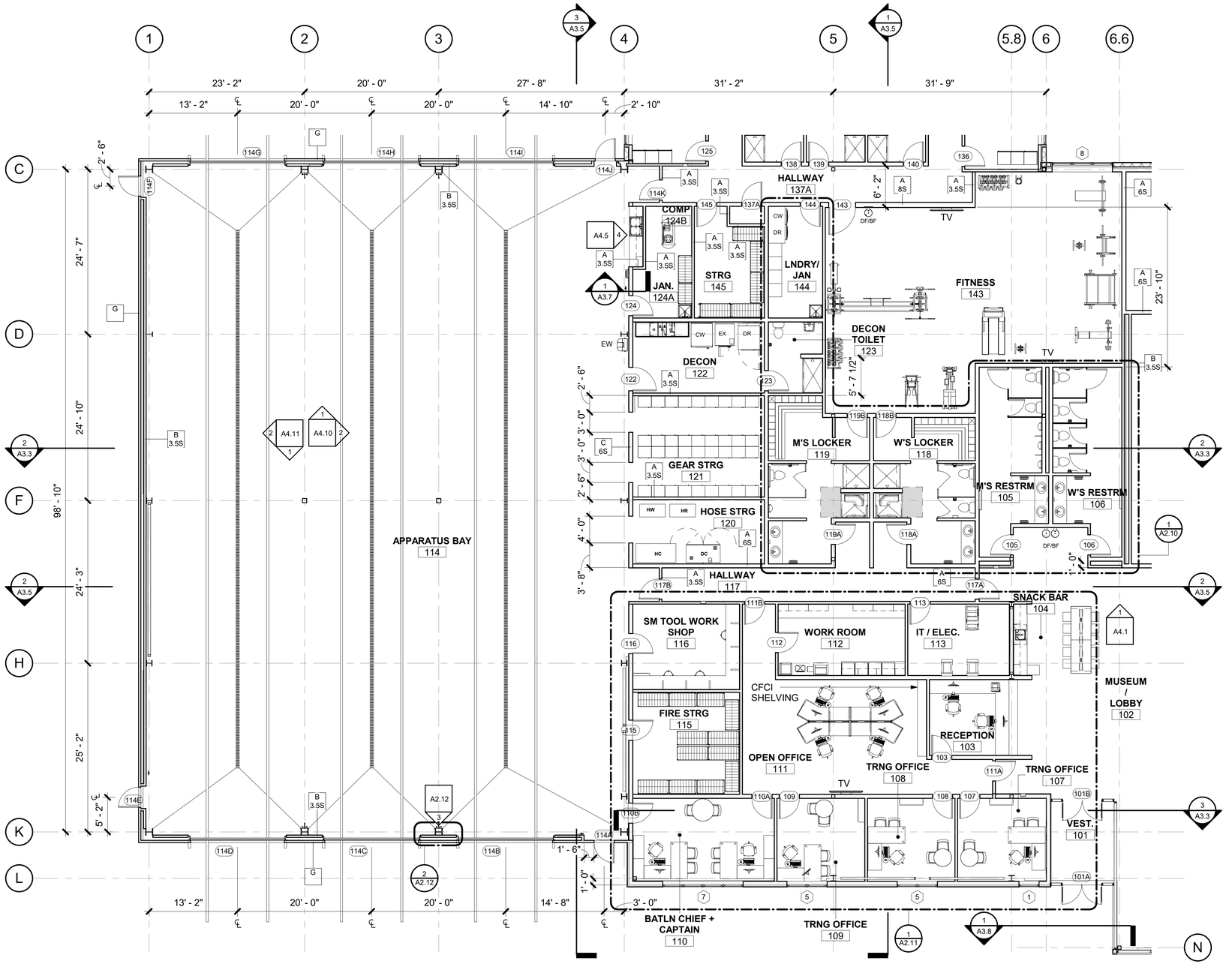

1 AREA A FIRST FLOOR PLAN
1/8" = 1'-0"

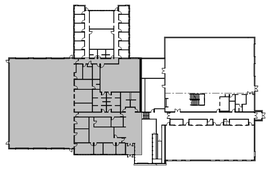

KEY PLAN

STATE OF ALASKA 49TH DAVE JAMES DREHER A-14794 Registered Professional Architect 5/9/18

Burkhart Croft ARCHITECTS LLC
880 N Street Suite 302 | Anchorage Alaska 99501
T: 907.929.9334 | www.burkhart-croft.com

MATANUSKA-SUSITNA BOROUGH

MSB FIRE STATION 6-2

WASILLA, ALASKA

DATE:	5/9/2018
DRAWN:	JKJ
CHECKED:	JBC
PROJECT:	1725
DRAWING TITLE:	AREA A FLOOR PLAN
REVISIONS:	
SHEET NO:	**A2.2**

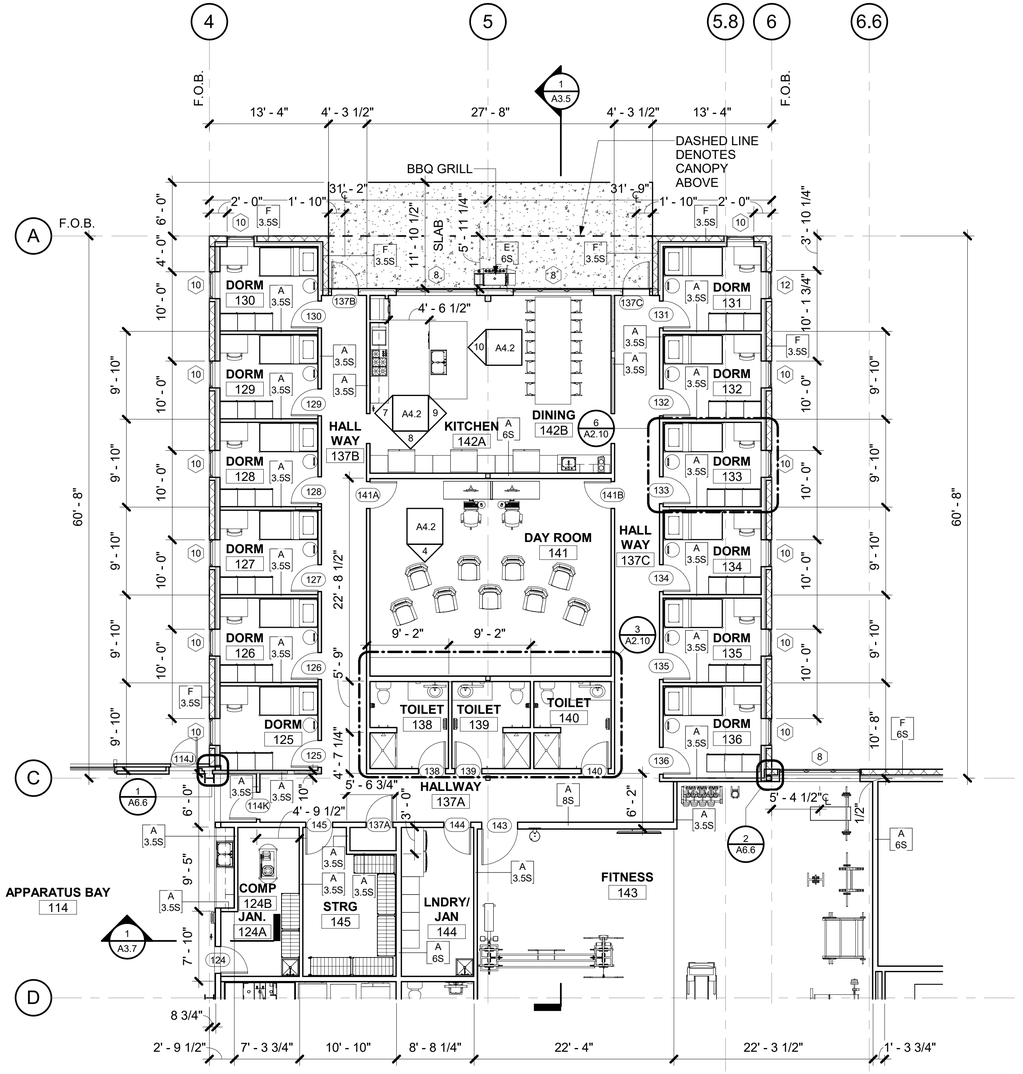

1 AREA B FIRST FLOOR PLAN
1/8" = 1'-0"

FLOOR PLAN NOTES

1. ALL FF&E ITEMS SHOWN ON DRAWINGS ARE CFCI UNLESS NOTED OTHERWISE.

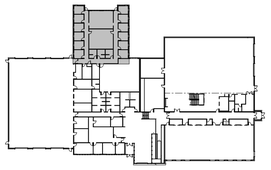

KEY PLAN

STATE OF ALASKA 49TH DAVE JAMES DREHER A-14794 Registered Professional Architect 5/9/18

Burkhart Croft ARCHITECTS LLC
880 N Street Suite 302 | Anchorage Alaska 99501
T: 907.929.9334 | www.burkhart-croft.com

MATANUSKA-SUSITNA BOROUGH

MSB FIRE STATION 6-2

WASILLA, ALASKA

DATE: 5/9/2018
DRAWN: JKJ
CHECKED: JBC
PROJECT: 1725
DRAWING TITLE: AREA B FLOOR PLAN
REVISIONS:
SHEET NO: **A2.3**

FLOOR PLAN NOTES

1. ALL FF&E ITEMS SHOWN ON DRAWINGS ARE CFCI UNLESS NOTED OTHERWISE.

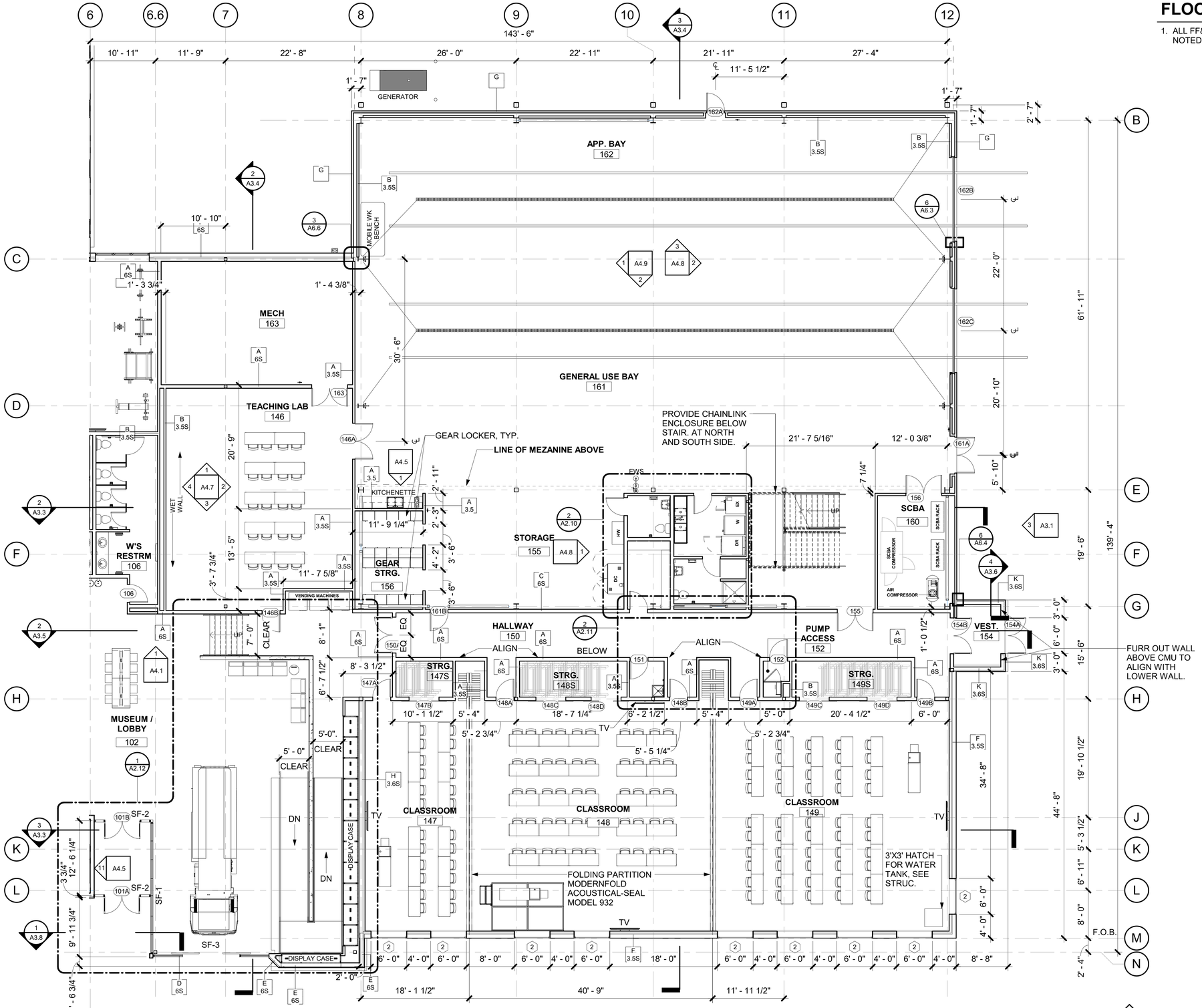

1 AREA C FIRST FLOOR PLAN
1/8" = 1'-0"

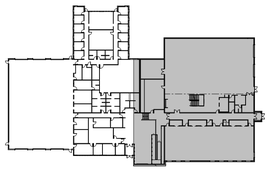

KEY PLAN

STATE OF ALASKA 49TH DAVE JAMES DREHER A-14794 Registered Professional Architect 5/9/18

Burkhart Croft ARCHITECTS LLC
880 N Street Suite 302 | Anchorage Alaska 99501
T: 907.929.9334 | www.burkhart-croft.com

MATANUSKA-SUSITNA BOROUGH

MSB FIRE STATION 6-2

WASILLA, ALASKA

DATE:	5/9/2018
DRAWN:	JKJ
CHECKED:	JBC
PROJECT:	1725
DRAWING TITLE:	AREA C FLOOR PLAN
REVISIONS:	
SHEET NO:	A2.4

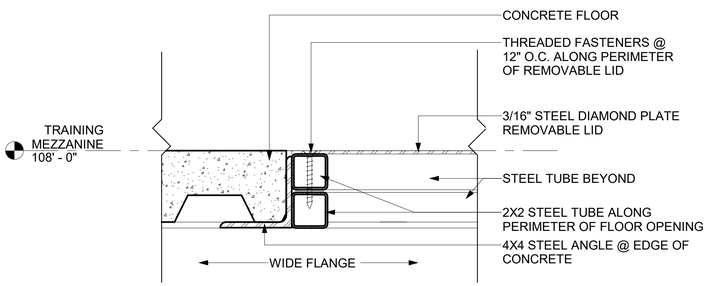

4 DETAIL @ REMOVABLE FLOOR OPENINGS
3" = 1'-0"

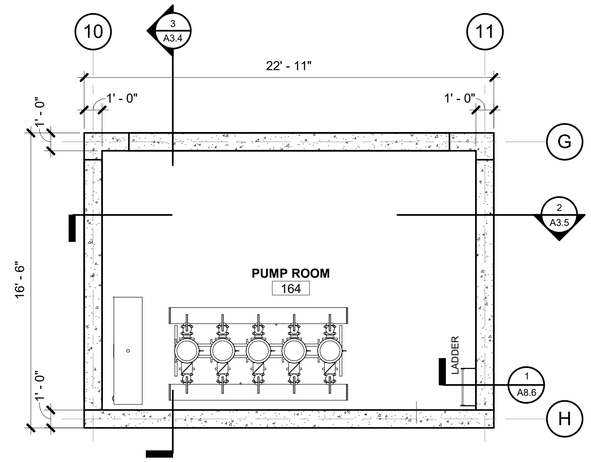

3 PUMP ROOM PLAN
1/4" = 1'-0"

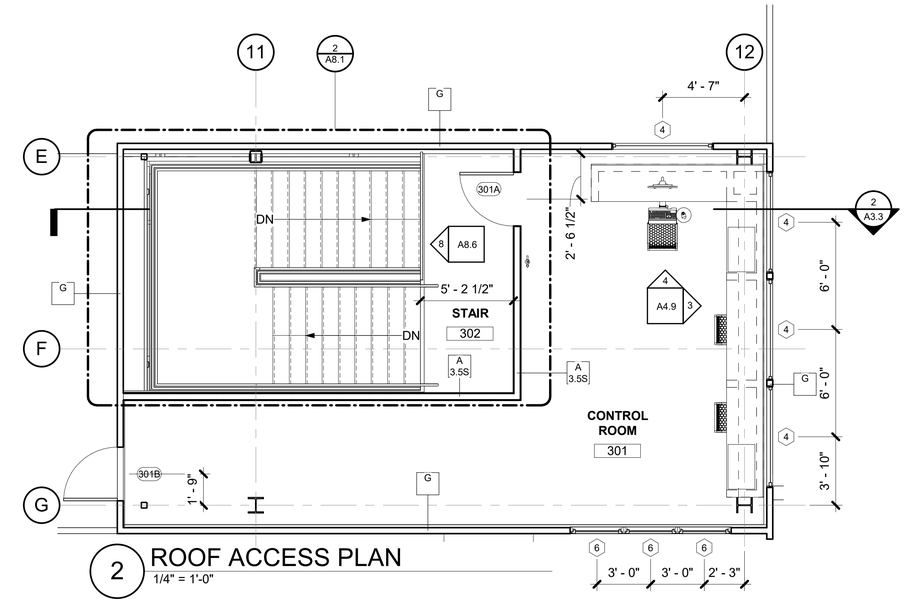

2 ROOF ACCESS PLAN
1/4" = 1'-0"

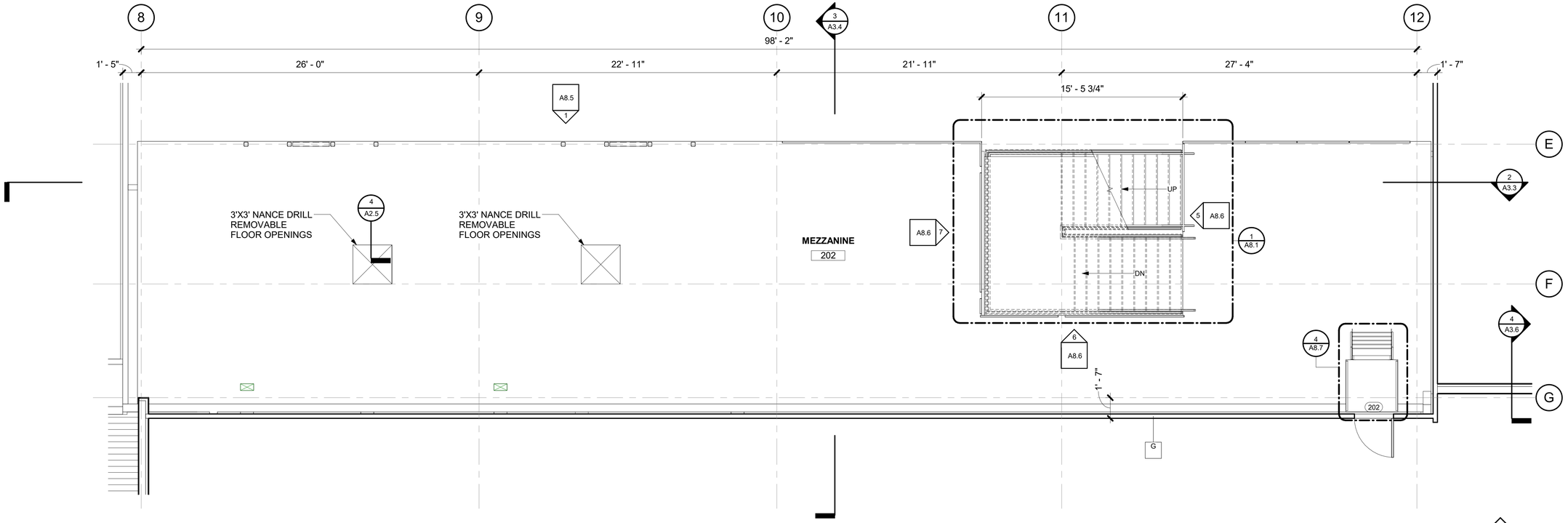

1 MEZZANINE PLAN
1/4" = 1'-0"

STATE OF ALASKA 49TH
DAVE JAMES DREHER
A-14794
Registered Professional Architect
5/9/18

Burkhart Croft
ARCHITECTS LLC
880 N Street Suite 302 | Anchorage Alaska 99501
T: 907.929.9334 | www.burkhart-croft.com

MATANUSKA-SUSITNA BOROUGH

MSB FIRE STATION 6-2

WASILLA, ALASKA

DATE:	5/9/2018
DRAWN:	JKJ
CHECKED:	JBC
PROJECT:	1725
DRAWING TITLE:	MEZZANINE, ROOF ACCESS AND PUMP ROOM
REVISIONS:	
SHEET NO:	A2.5

1 FIRST FLOOR REFERENCE REFLECTED CIELING PLAN

1" = 10'-0"

STATE OF ALASKA 49TH DAVE JAMES DREHER A-14794 Registered Professional Architect 5/9/18

Burkhart Croft ARCHITECTS LLC
880 N Street Suite 302 | Anchorage Alaska 99501
T: 907.929.9334 | www.burkhart-croft.com

MATANUSKA-SUSITNA BOROUGH

MSB FIRE STATION 6-2

WASILLA, ALASKA

DATE: 5/9/2018

DRAWN: JKJ

CHECKED: JBC

PROJECT: 1725

DRAWING TITLE:
FIRST FLOOR REFERENCE REFLECTED CEILING PLAN

REVISIONS:

SHEET NO:

A2.6

1 FIRST FLOOR REFLECTED CIELING PLAN - AREA A
1/8" = 1'-0"

LEGEND

- 2' x 4' ACOUSTIC CEILING PANELS
- GYPSUM WALL BOARD
- RECESSED FIXTURE
- SURFACE MOUNT FIXTURE
- PENDANT FIXTURE
- HIGH BAY EMERGENCY FIXTURE
- HIGH BAY FIXTURE
- WALL MOUNTED FIXTURE
- RECESSED CAN FIXTURE
- WALL SCONCE
- WALL MOUNTED FIXTURE
- EMERGENCY LIGHTING UNIT
- EXTERIOR EMERGENCY FLOOR LIGHT
- OCCUPANCY SENSOR
- SELF CONTAINED EMERGENCY SIGN
- RETURN REGISTER
- SUPPLY DIFFUSER

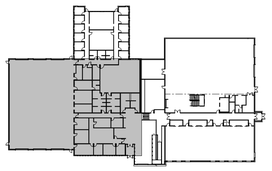

KEY PLAN

STATE OF ALASKA 49TH DAVE JAMES DREHER A-14794 Registered Professional Architect 5/9/18

Burkhart Croft ARCHITECTS LLC
880 N Street Suite 302 | Anchorage Alaska 99501
T: 907.929.9334 | www.burkhart-croft.com

MATANUSKA-SUSITNA BOROUGH

MSB FIRE STATION 6-2

WASILLA, ALASKA

DATE: 5/9/2018
DRAWN: TOS
CHECKED: DJD
PROJECT: 1725
DRAWING TITLE: AREA A REFLECTED CEILING PLAN
REVISIONS:
SHEET NO: **A2.7**

LEGEND

- 2' x 4' ACOUSTIC CEILING PANELS
- GYPSUM WALL BOARD
- RECESSED FIXTURE
- SURFACE MOUNT FIXTURE
- PENDANT FIXTURE
- HIGH BAY EMERGENCY FIXTURE
- HIGH BAY FIXTURE
- WALL MOUNTED FIXTURE
- RECESSED CAN FIXTURE
- WALL SCONCE
- WALL MOUNTED FIXTURE
- EMERGENCY LIGHTING UNIT
- EXTERIOR EMERGENCY FLOOR LIGHT
- OCCUPANCY SENSOR
- SELF CONTAINED EMERGENCY SIGN
- RETURN REGISTER
- SUPPLY DIFFUSER

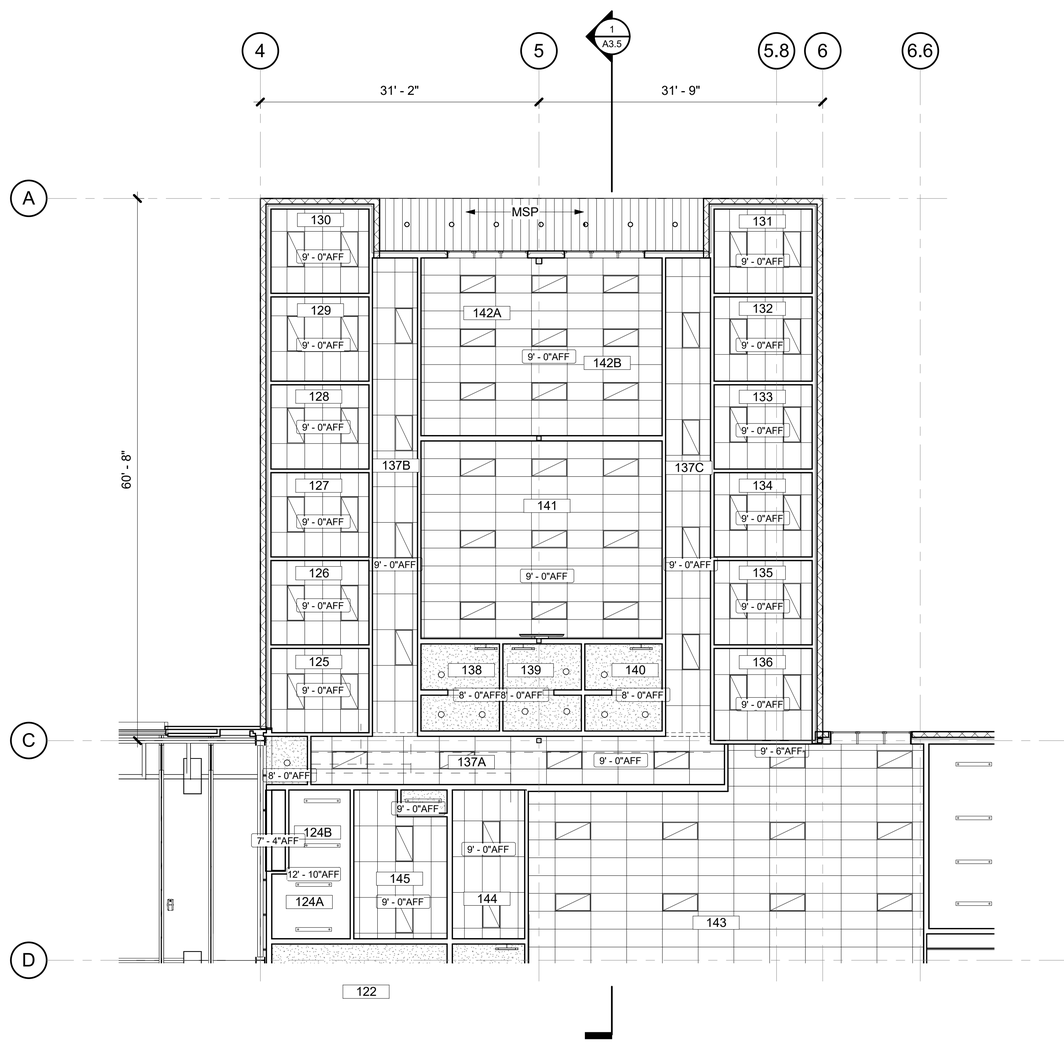

1 FIRST FLOOR REFLECTED CIELING PLAN - AREA B
1/8" = 1'-0"

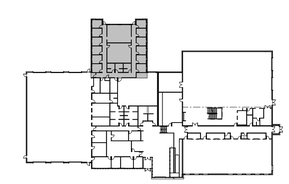

KEY PLAN

STATE OF ALASKA 49TH
DAVE JAMES DREHER
A-14794
Registered Professional Architect
5/9/18

Burkhart Croft ARCHITECTS LLC
880 N Street Suite 302 | Anchorage Alaska 99501
T: 907.929.9334 | www.burkhart-croft.com

MATANUSKA-SUSITNA BOROUGH

MSB FIRE STATION 6-2

WASILLA, ALASKA

DATE:	5/9/2018
DRAWN:	TOS
CHECKED:	DJD
PROJECT:	1725
DRAWING TITLE:	AREA B REFLECTED CEILING PLAN
REVISIONS:	
SHEET NO:	**A2.8**

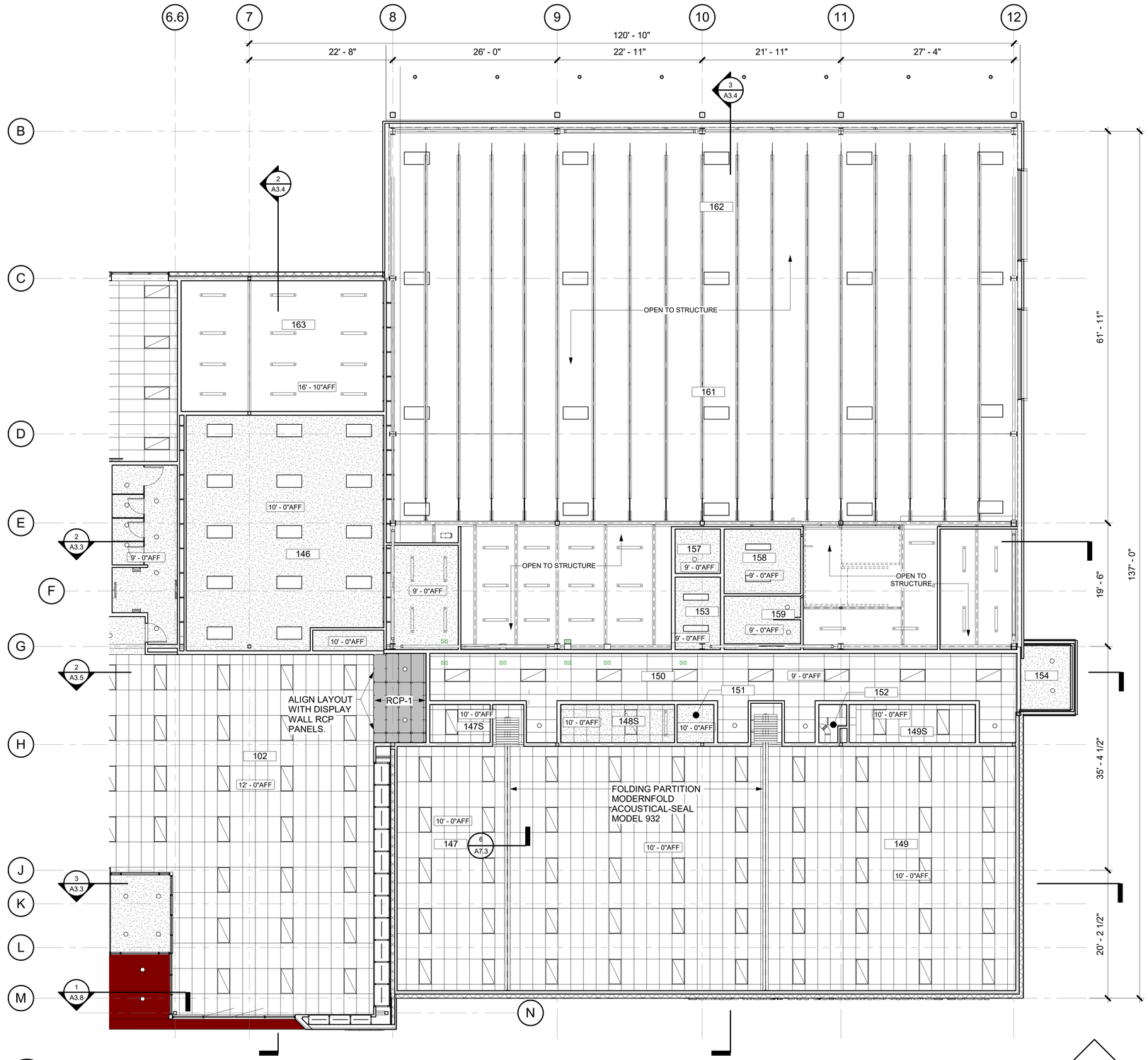

1 FIRST FLOOR REFLECTED CEILING PLAN - AREA C

1/8" = 1'-0"

LEGEND

- 2' x 4' ACOUSTIC CEILING PANELS
- GYPSUM WALL BOARD
- RECESSED FIXTURE
- SURFACE MOUNT FIXTURE
- PENDANT FIXTURE
- HIGH BAY EMERGENCY FIXTURE
- HIGH BAY FIXTURE
- WALL MOUNTED FIXTURE
- RECESSED CAN FIXTURE
- WALL SCONCE
- WALL MOUNTED FIXTURE
- EMERGENCY LIGHTING UNIT
- EXTERIOR EMERGENCY FLOOR LIGHT
- OCCUPANCY SENSOR
- SELF CONTAINED EMERGENCY SIGN
- RETURN REGISTER
- SUPPLY DIFFUSER

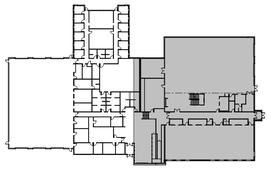

KEY PLAN

STATE OF ALASKA 49TH DAVE JAMES DREHER A-14794 Registered Professional Architect 5/9/18

Burkhart Croft ARCHITECTS LLC
880 N Street Suite 302 | Anchorage Alaska 99501
T: 907.929.9334 | www.burkhart-croft.com

MATANUSKA-SUSITNA BOROUGH

MSB FIRE STATION 6-2

WASILLA, ALASKA

DATE:	5/9/2018
DRAWN:	TOS
CHECKED:	DJD
PROJECT:	1725
DRAWING TITLE:	AREA C REFLECTED CEILING PLAN
REVISIONS:	
SHEET NO:	A2.9

FLOOR PLAN NOTES

1. ALL FF&E ITEMS SHOWN ON DRAWINGS ARE CFCI UNLESS NOTED OTHERWISE.

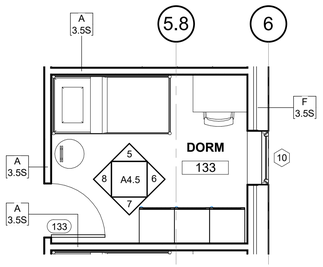

6 ENLARGED PLAN - TYPICAL DORM ROOM
1/4" = 1'-0"

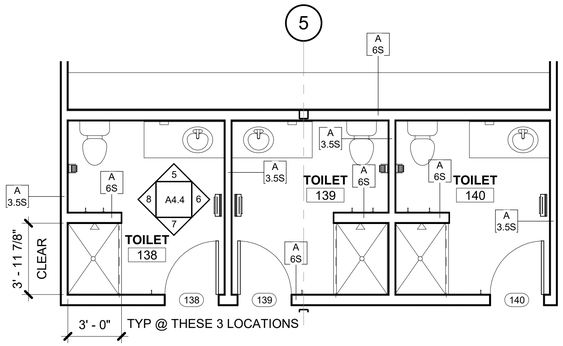

3 ENLARGED PLAN - AREA B
1/4" = 1'-0"

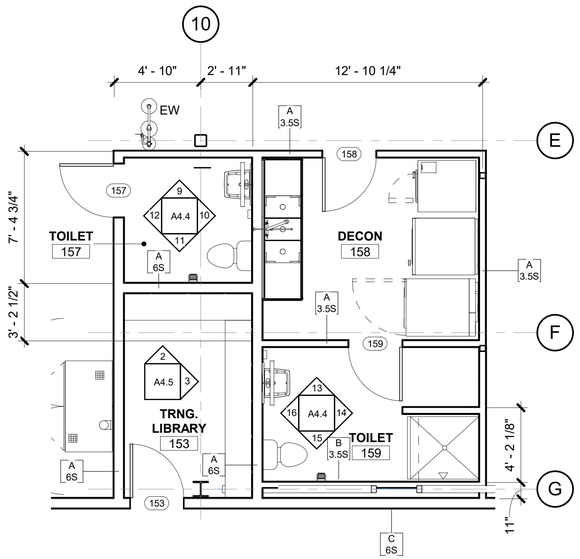

2 ENLARGED PLAN - AREA C
1/4" = 1'-0"

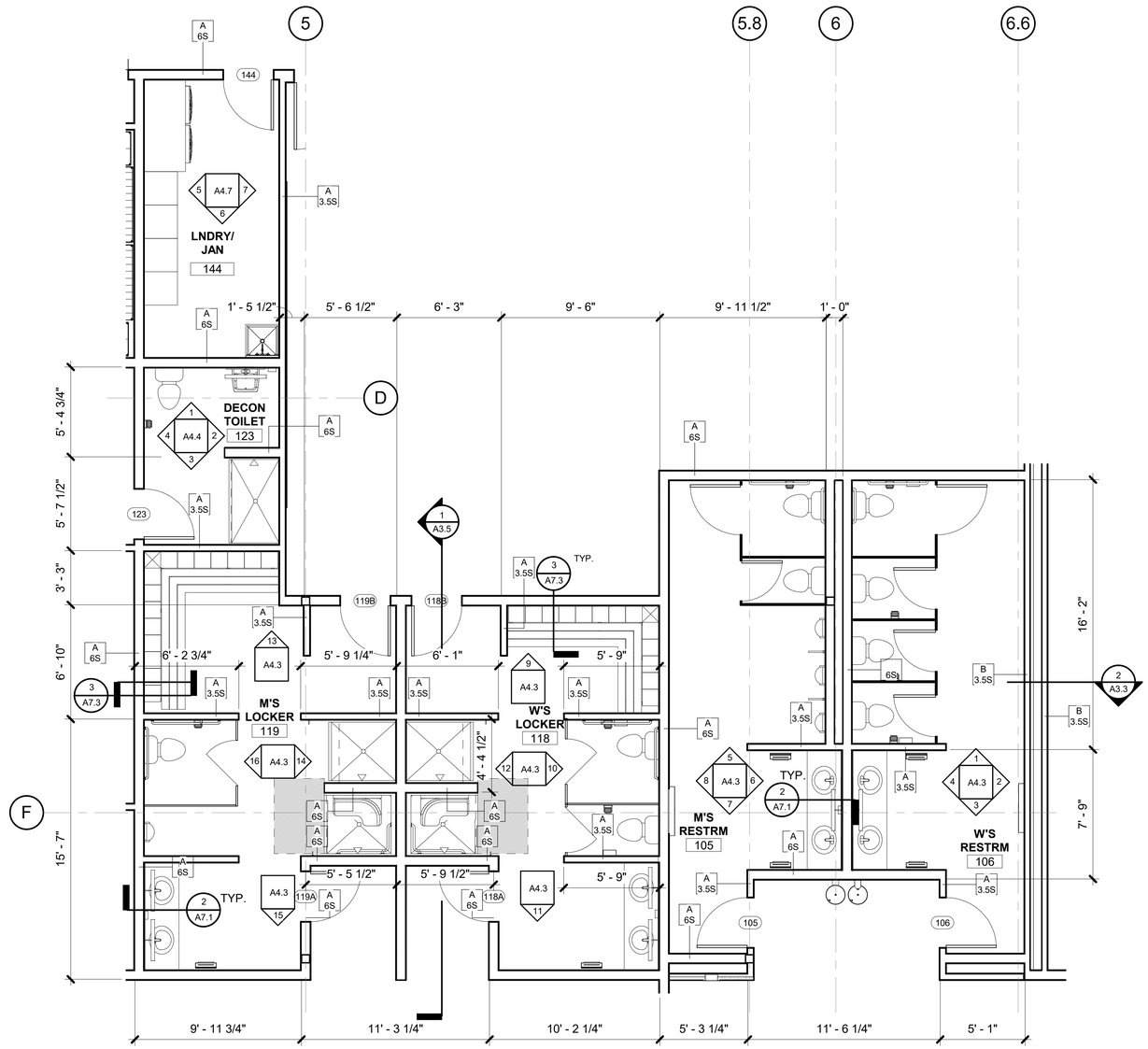

1 ENLARGED PLAN - AREA A
1/4" = 1'-0"

STATE OF ALASKA 49TH
DAVE JAMES DREHER
A-14794
Registered Professional Architect
5/9/18

Burkhart Croft ARCHITECTS LLC
880 N Street Suite 302 | Anchorage Alaska 99501
T: 907.929.9334 | www.burkhart-croft.com

MATANUSKA-SUSITNA BOROUGH

MSB FIRE STATION 6-2

WASILLA, ALASKA

DATE: 5/9/2018
DRAWN: TOS
CHECKED: DJD
PROJECT: 1725
DRAWING TITLE: ENLARGED PLANS
REVISIONS:
SHEET NO:
A2.10

FLOOR PLAN NOTES

1. ALL FF&E ITEMS SHOWN ON DRAWINGS ARE CFCI UNLESS NOTED OTHERWISE.

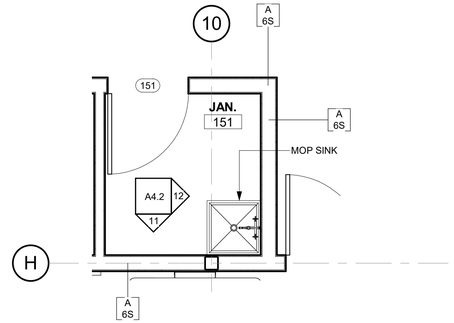

4 ENLARGED PLAN - JAN. 151
3/8" = 1'-0"

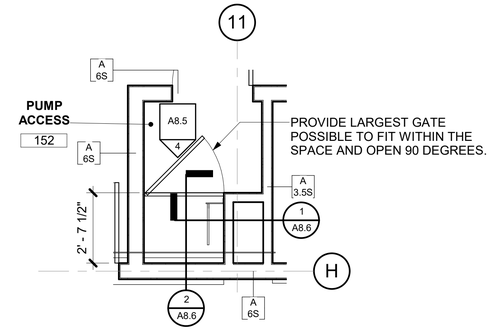

3 ENLARGED PLAN - PUMP ACCESS 152
3/8" = 1'-0"

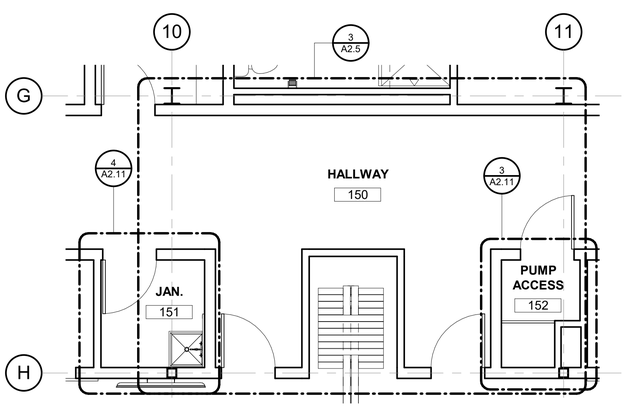

2 ENLARGED PLAN - PUMP ROOM AREA
1/4" = 1'-0"

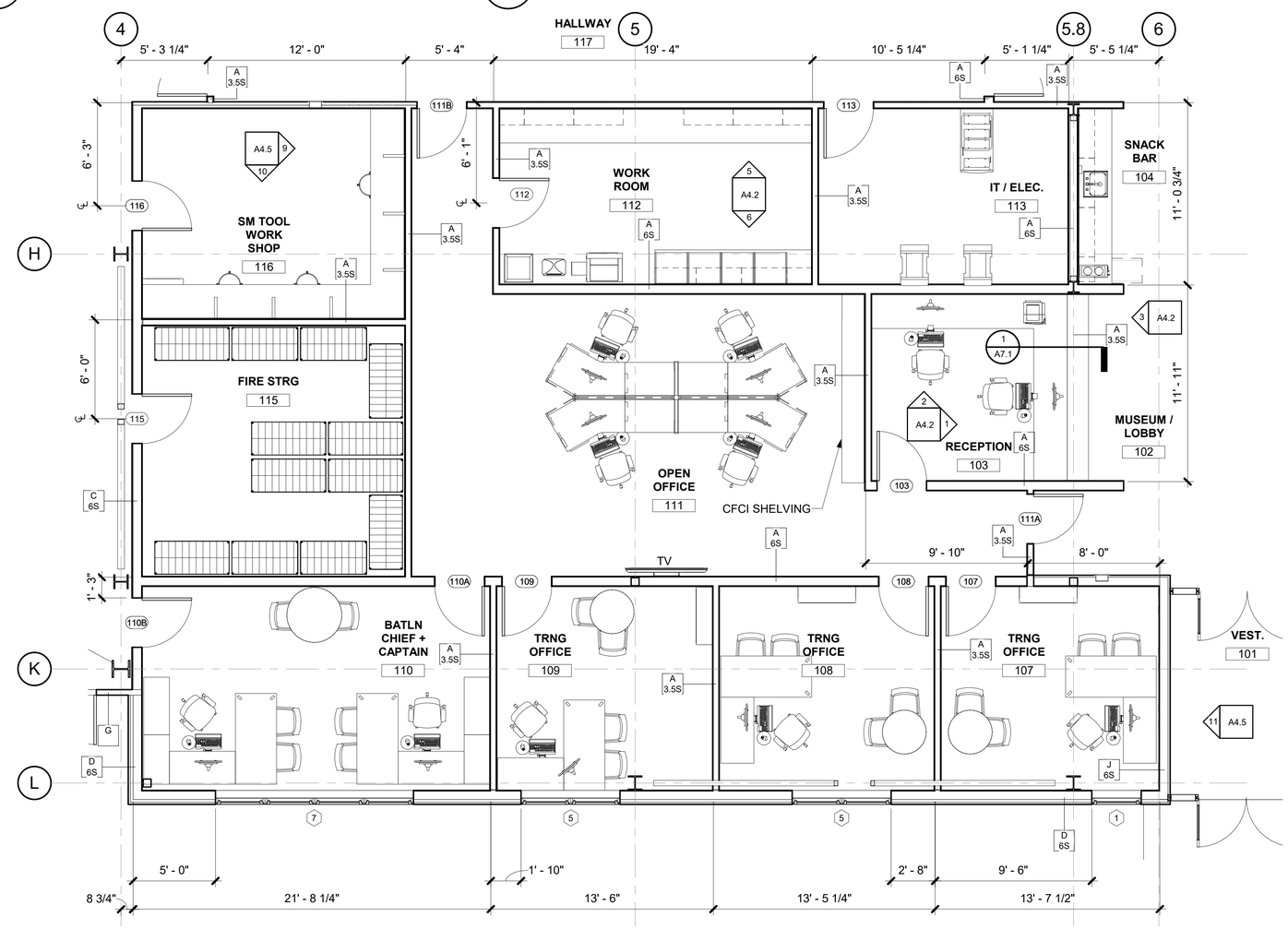

1 ENLARGED PLAN - AREA A
1/4" = 1'-0"

STATE OF ALASKA 49TH
DAVE JAMES DREHER
A-14794
Registered Professional Architect
5/9/18

Burkhart Croft
ARCHITECTS LLC
880 N Street Suite 302 | Anchorage Alaska 99501
T: 907.929.9334 | www.burkhart-croft.com

MATANUSKA-SUSITNA BOROUGH

MSB FIRE STATION 6-2

WASILLA, ALASKA

DATE:	5/9/2018
DRAWN:	BDN
CHECKED:	JBC
PROJECT:	1725
DRAWING TITLE:	ENLARGED PLANS
REVISIONS:	
SHEET NO:	**A2.11**

FLOOR PLAN NOTES

1. ALL FF&E ITEMS SHOWN ON DRAWINGS ARE CFCI UNLESS NOTED OTHERWISE.

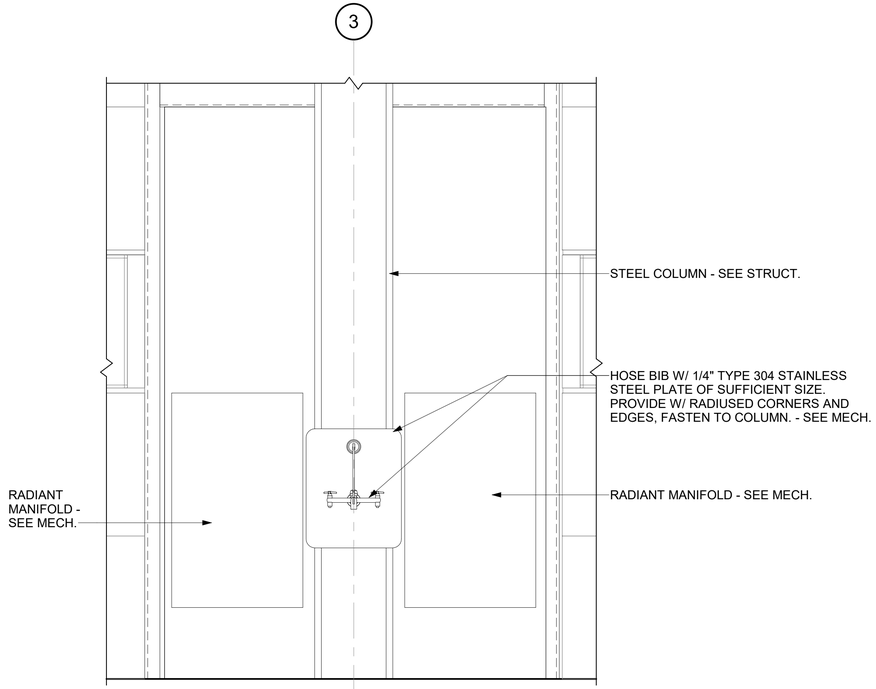

3 TYP RADIANT MANIFOLD ELEVATION SIM. @ SNOW MELT MANIFOLDS
1" = 1'-0"

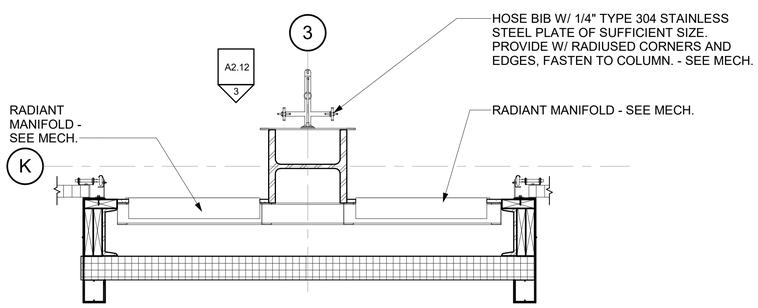

2 TYP RADIANT MANIFOLD PLAN SIM. @ SNOW MELT MANIFOLDS
1" = 1'-0"

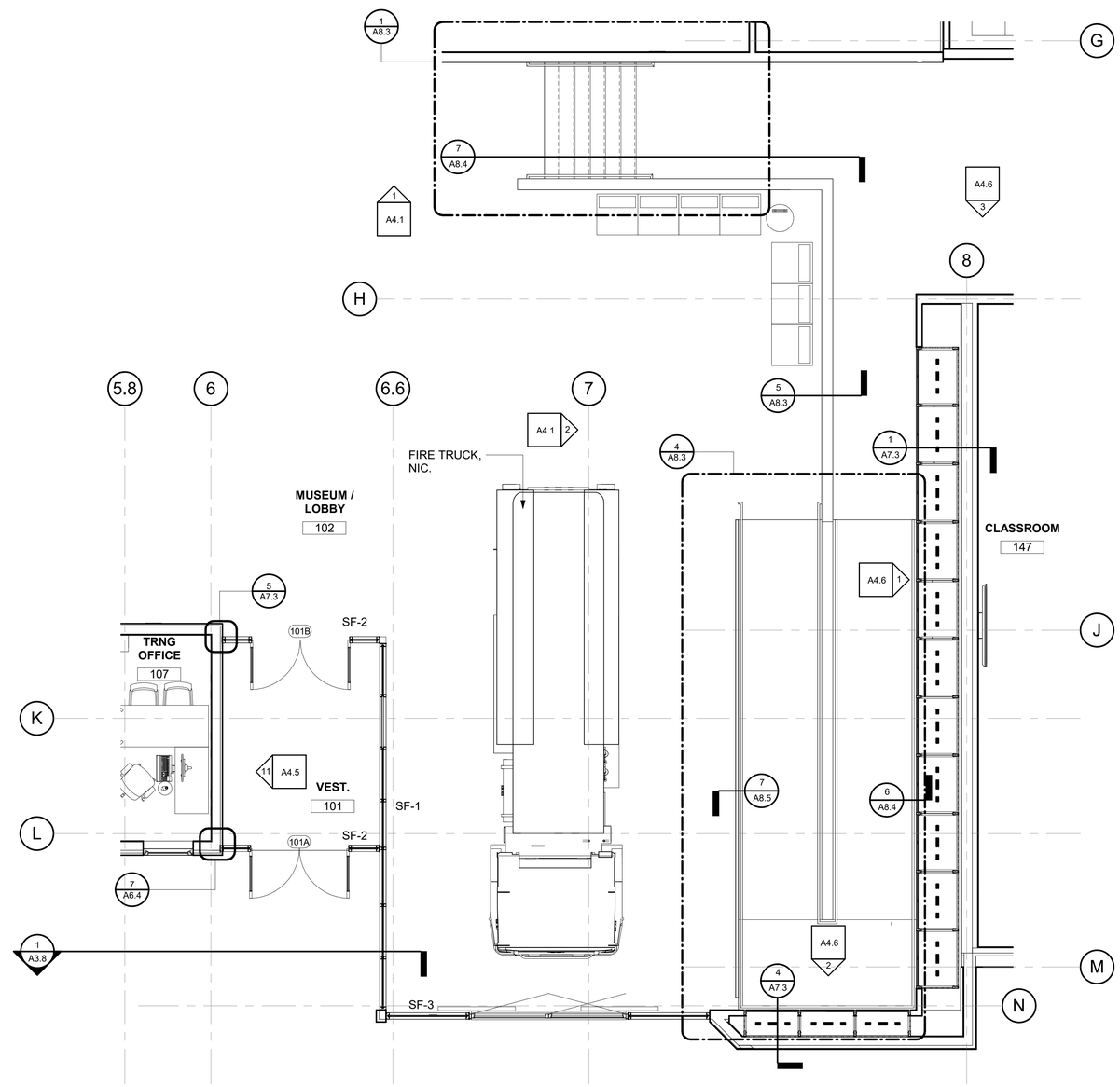

1 ENLARGED PLAN - AREA D
1/4" = 1'-0"

STATE OF ALASKA 49TH DAVE JAMES DREHER A-14794 Registered Professional Architect 5/9/18

Burkhart Croft ARCHITECTS LLC
880 N Street Suite 302 | Anchorage Alaska 99501
T: 907.929.9334 | www.burkhart-croft.com

MATANUSKA-SUSITNA BOROUGH

MSB FIRE STATION 6-2

WASILLA, ALASKA

DATE: 5/9/2018
DRAWN: TOS
CHECKED: DJD
PROJECT: 1725
DRAWING TITLE: ENLARGED PLANS
REVISIONS:
SHEET NO:
A2.12

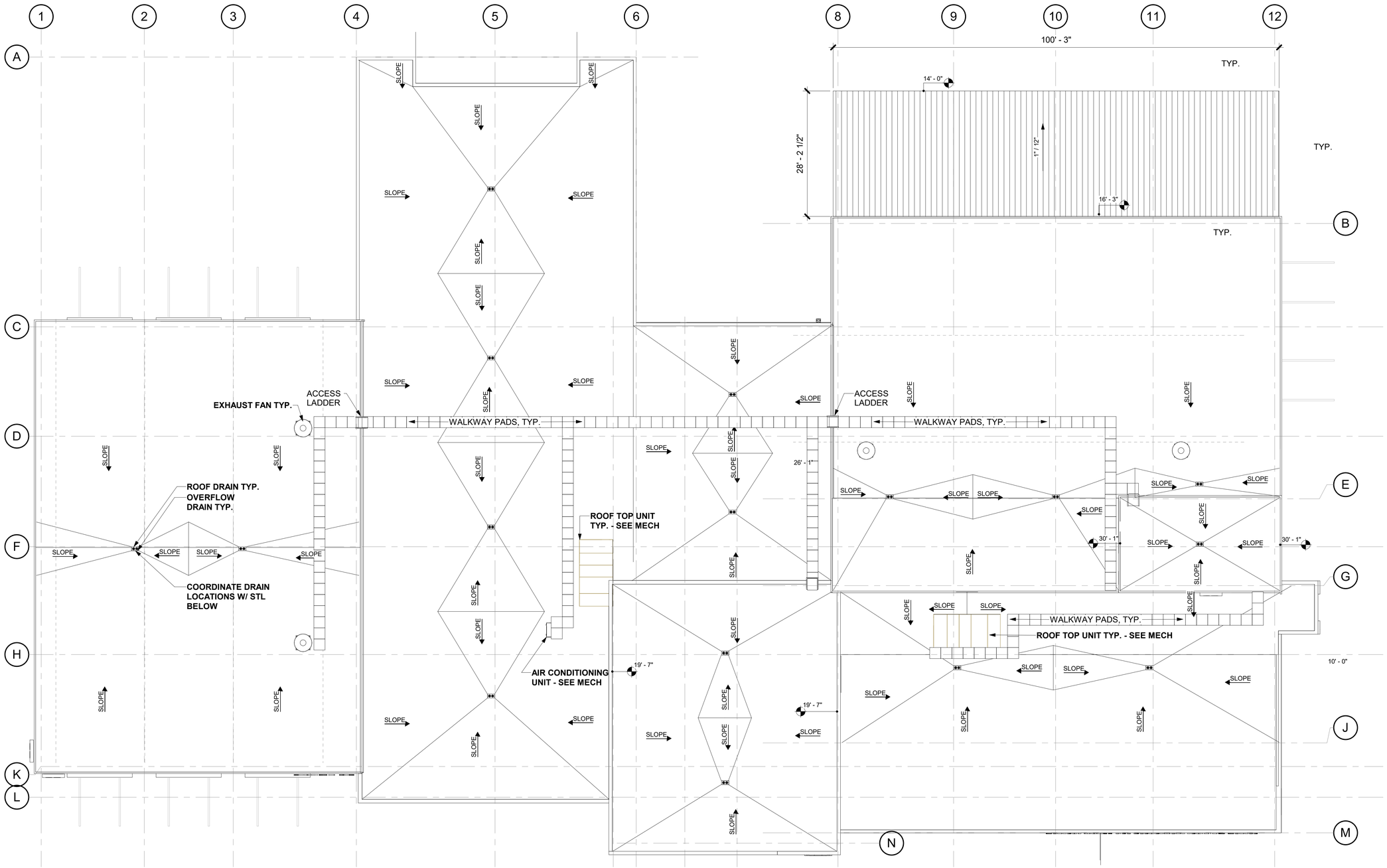

1 ROOF PLAN
3/32" = 1'-0"

STATE OF ALASKA 49TH
DAVE JAMES DREHER
A-14794
Registered Professional Architect
5/9/18

Burkhart Croft ARCHITECTS LLC
880 N Street Suite 302 | Anchorage Alaska 99501
T: 907.929.9334 | www.burkhart-croft.com

MATANUSKA-SUSITNA BOROUGH

MSB FIRE STATION 6-2

WASILLA, ALASKA

DATE: 5/9/2018
DRAWN: JKJ
CHECKED: JBC
PROJECT: 1725
DRAWING TITLE: ROOF PLAN
REVISIONS:
SHEET NO:
A2.13

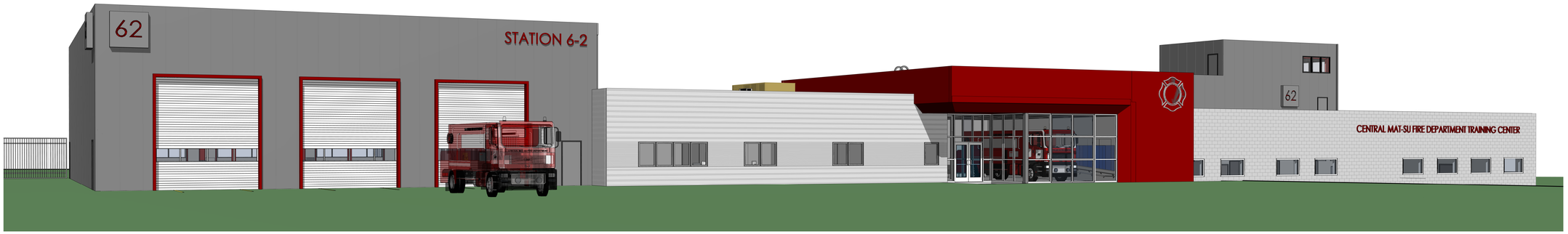

1 PERSPECTIVE SOUTHWEST

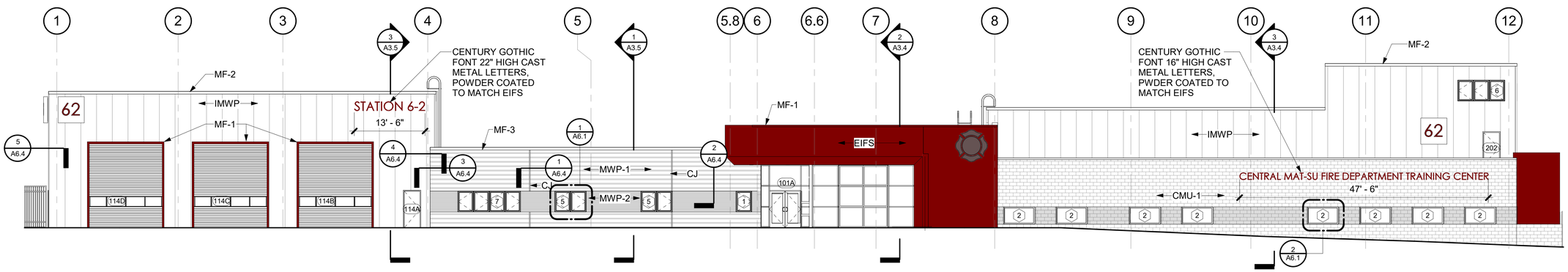

2 SOUTH ELEVATION

1" = 10'-0"

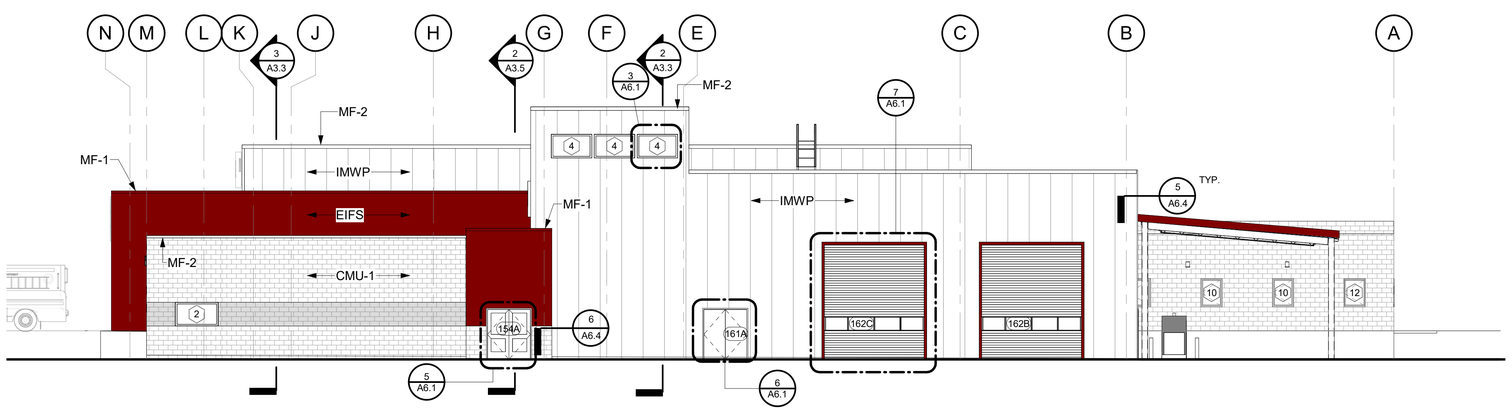

3 EAST ELEVATION

1" = 10'-0"

MATERIALS LEGEND

GRAPHIC	ABBREV.	MFR.	PROFILE / MODEL	COLOR
	IMWP	KINGSPAN	MINI MICRO-RIB	ZINC GRAY
	CMU-1	AS&G	8x8x16 GROUND FACE	CHARCOAL / BLACK
	CMU-2	AS&G	8x8x16 SPLIT FACE	PNT - TBD
	MWP-1	METAL SALES	T-17C	METALIC SILVER
	MWP-2	METAL SALES	TL-1222-WALL	METALIC SILVER
	EIFS	EXT. INSULATION & FINISH SYSTEM		RODDA AUTUMN BRONZE 8669
	MF-1	METAL FLASHING		COLONIAL RED
	MF-2	METAL FLASHING		ZINC GRAY
	MF-3	METAL FLASHING		METALIC SILVER
	MSP	BERRIDGE	THIN LINE	SNOWDRIFT WHITE
	PNT-4	RODDA		GRAY

CMU = CONCRETE MASONRY UNIT, EIFS = EXTERIOR INSULATION & FINISH SYSTEM, IMWP = INSULATED METAL WALL PANEL, MF = METAL FLASHING, MSP = METAL SOFFIT PANEL, MWP = METAL WALL PANEL, PNT - PAINT

STATE OF ALASKA 49TH
DAVE JAMES DREHER
A-14794
Registered Professional Architect
5/9/18

Burkhart Croft ARCHITECTS LLC
880 N Street Suite 302 | Anchorage Alaska 99501
T: 907.929.9334 | www.burkhart-croft.com

MATANUSKA-SUSITNA BOROUGH

MSB FIRE STATION 6-2

WASILLA, ALASKA

DATE: 5/9/2018
DRAWN: JKJ
CHECKED: JBC
PROJECT: 1725
DRAWING TITLE: EXTERIOR ELEVATIONS
REVISIONS:
SHEET NO:

A3.1

1 PERSPECTIVE SOUTHEAST

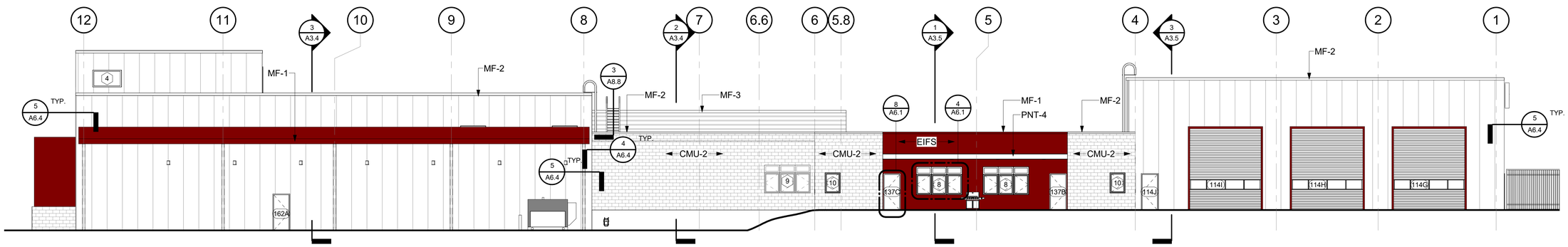

2 NORTH ELEVATION
1" = 10'-0"

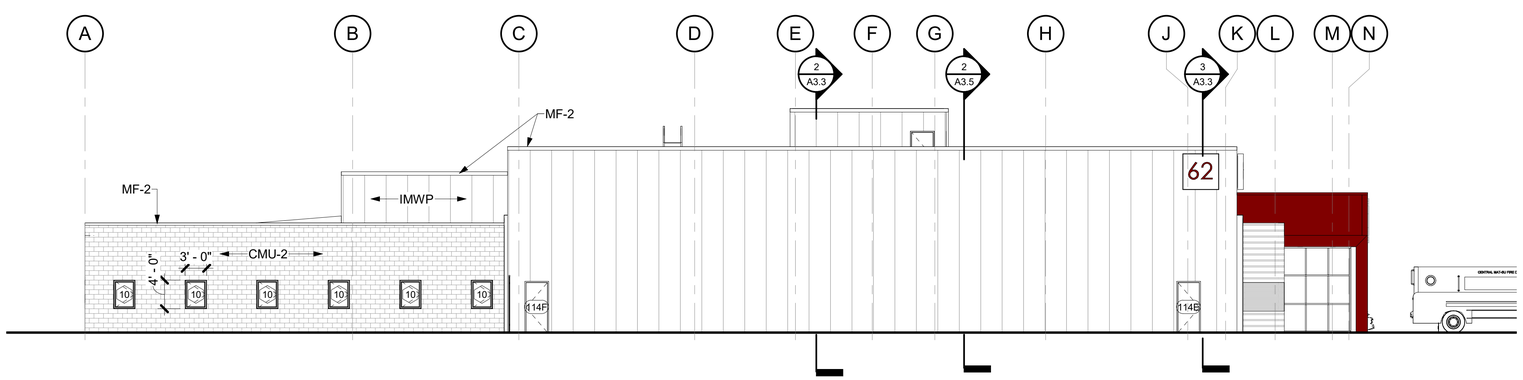

3 WEST ELEVATION
1" = 10'-0"

MATERIALS LEGEND

GRAPHIC	ABBREV.	MFR.	PROFILE / MODEL	COLOR
	IMWP	KINGSPAN	MINI MICRO-RIB	ZINC GRAY
	CMU-1	AS&G	8x8x16 GROUND FACE	CHARCOAL / BLACK
	CMU-2	AS&G	8x8x16 SPLIT FACE	PNT - TBD
	MWP-1	METAL SALES	T-17C	METALIC SILVER
	MWP-2	METAL SALES	TL-1222-WALL	METALIC SILVER
	EIFS	EXT. INSULATION & FINISH SYSTEM		RODDA AUTUMN BRONZE 8669
	MF-1	METAL FLASHING		COLONIAL RED
	MF-2	METAL FLASHING		ZINC GRAY
	MF-3	METAL FLASHING		METALIC SILVER
	MSP	BERRIDGE	THIN LINE	SNOWDRIFT WHITE
	PNT-4	RODDA		GRAY

CMU = CONCRETE MASONRY UNIT, EIFS = EXTERIOR INSULATION & FINISH SYSTEM, IMWP = INSULATED METAL WALL PANEL, MF = METAL FLASHING, MSP = METAL SOFFIT PANEL, MWP = METAL WALL PANEL, PNT - PAINT

STATE OF ALASKA 49TH DAVE JAMES DREHER A-14794 Registered Professional Architect 5/9/18

Burkhart Croft ARCHITECTS LLC
880 N Street Suite 302 | Anchorage Alaska 99501
T: 907.929.9334 | www.burkhart-croft.com

MATANUSKA-SUSITNA BOROUGH

MSB FIRE STATION 6-2

WASILLA, ALASKA

DATE: 5/9/2018
DRAWN: JKJ
CHECKED: JBC
PROJECT: 1725
DRAWING TITLE: EXTERIOR ELEVATIONS
REVISIONS:
SHEET NO:
A3.2

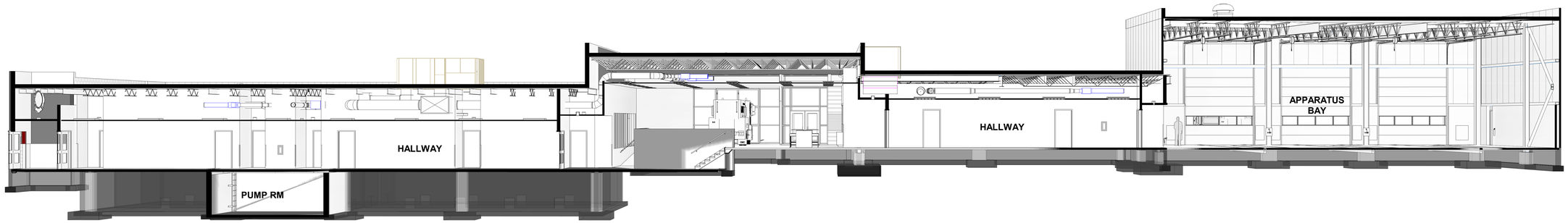

1 BUILDING SECTIONAL PERSPECTIVE A

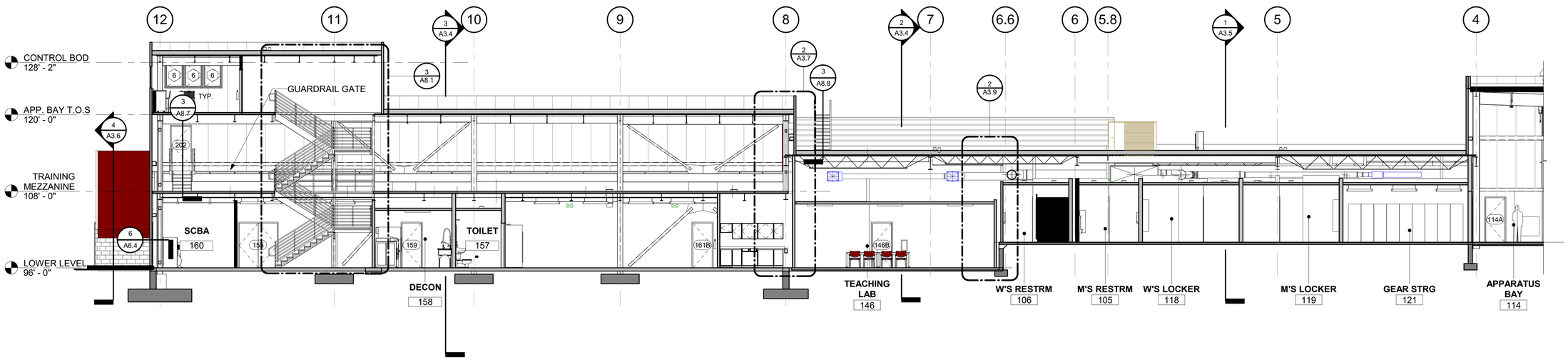

2 BUILDING SECTION B
1/8" = 1'-0"

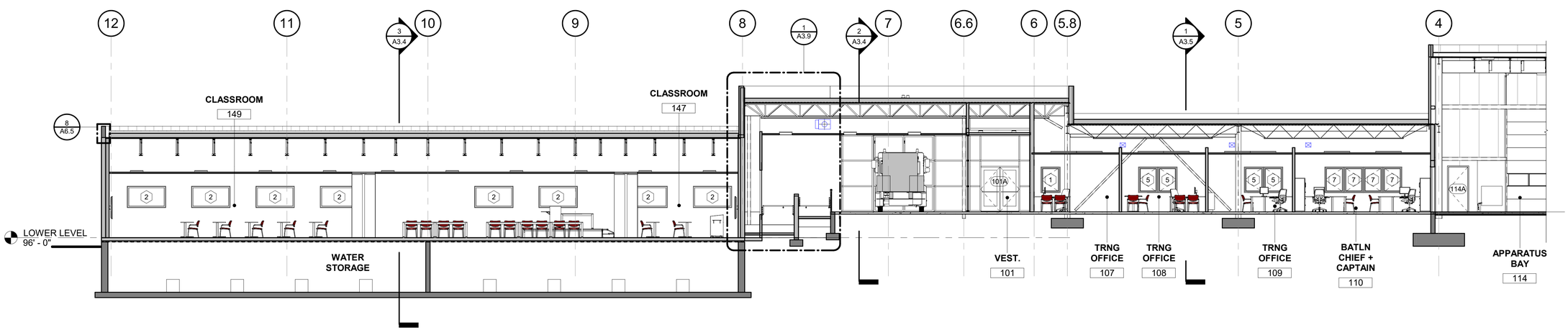

3 BUILDING SECTION C
1/8" = 1'-0"

STATE OF ALASKA 49TH DAVE JAMES DREHER A-14794 Registered Professional Architect 5/9/18

Burkhart Croft ARCHITECTS LLC
880 N Street Suite 302 | Anchorage Alaska 99501
T: 907.929.9334 | www.burkhart-croft.com

MATANUSKA-SUSITNA BOROUGH
MSB FIRE STATION 6-2
WASILLA, ALASKA

DATE: 5/9/2018
DRAWN: JKJ
CHECKED: JBC
PROJECT: 1725
DRAWING TITLE: BUILDING SECTIONS
REVISIONS:
SHEET NO:
A3.3

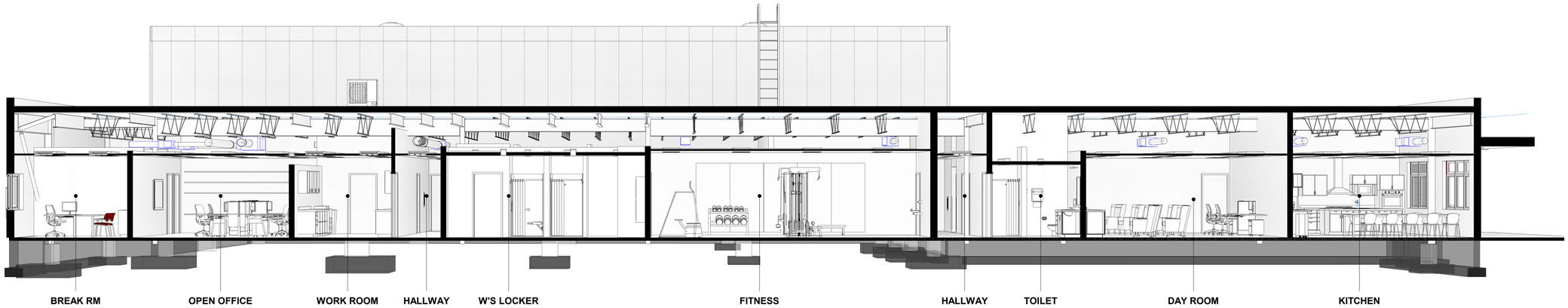

1 BUILDING SECTIONAL PERSPECTIVE D

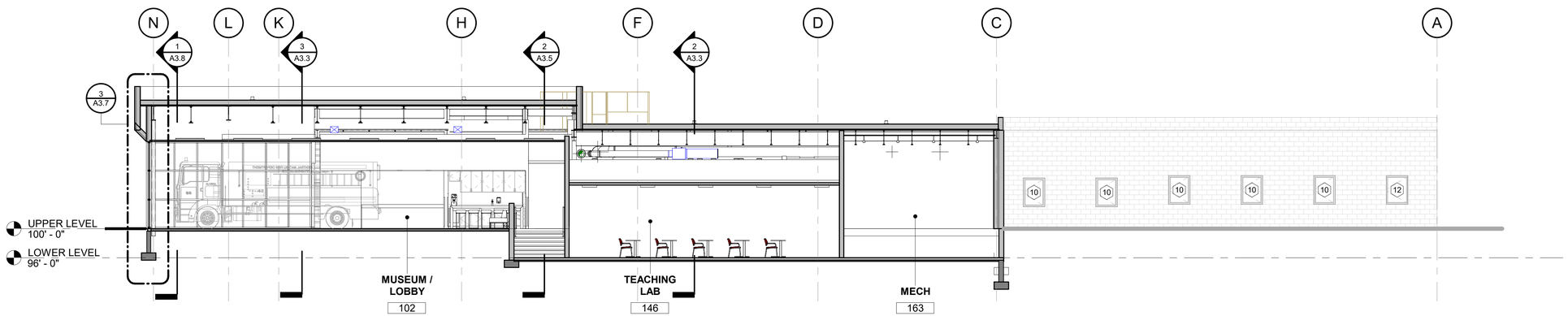

2 BUILDING SECTION E
1/8" = 1'-0"

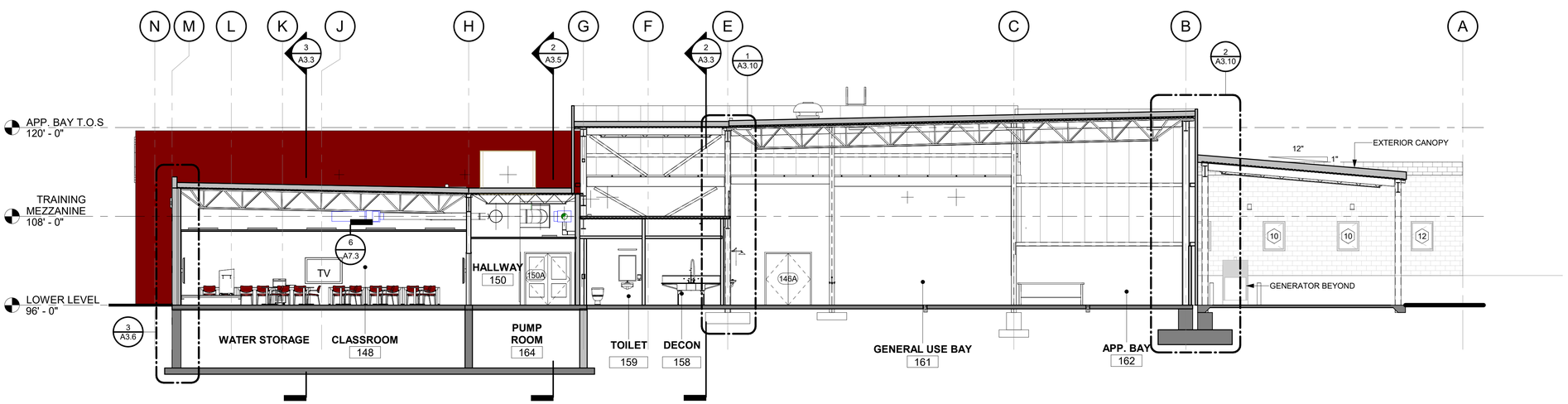

3 BUILDING SECTION F
1/8" = 1'-0"

STATE OF ALASKA 49TH DAVE JAMES DREHER A-14794 Registered Professional Architect 5/9/18

Burkhart Croft ARCHITECTS LLC
880 N Street Suite 302 | Anchorage Alaska 99501
T: 907.929.9334 | www.burkhart-croft.com

MATANUSKA-SUSITNA BOROUGH

MSB FIRE STATION 6-2

WASILLA, ALASKA

DATE:	5/9/2018
DRAWN:	JKJ
CHECKED:	JBC
PROJECT:	1725
DRAWING TITLE:	BUILDING SECTIONS
REVISIONS:	
SHEET NO:	**A3.4**

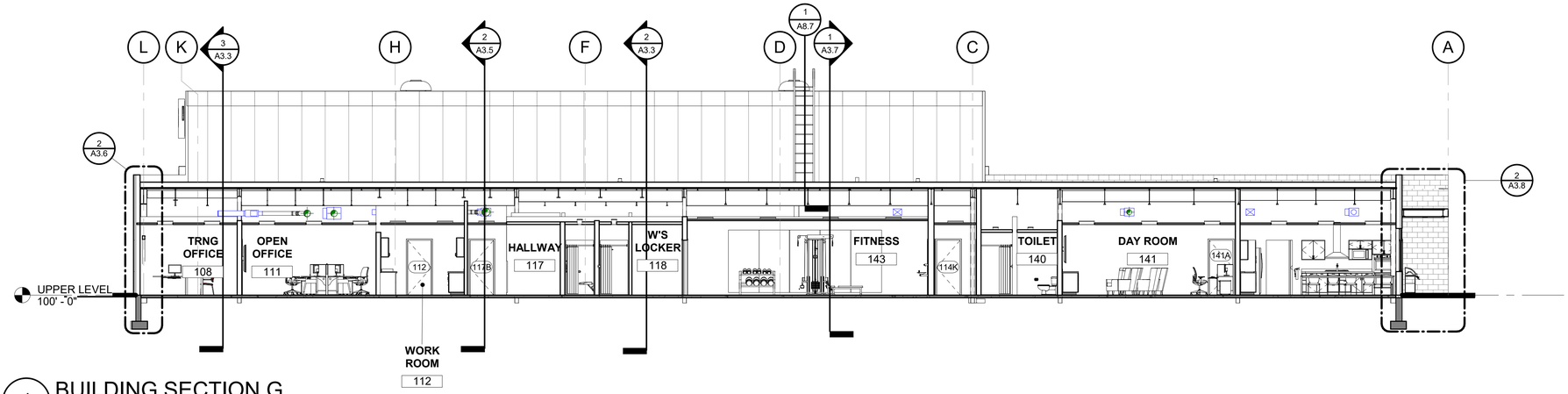

1 BUILDING SECTION G
1/8" = 1'-0"

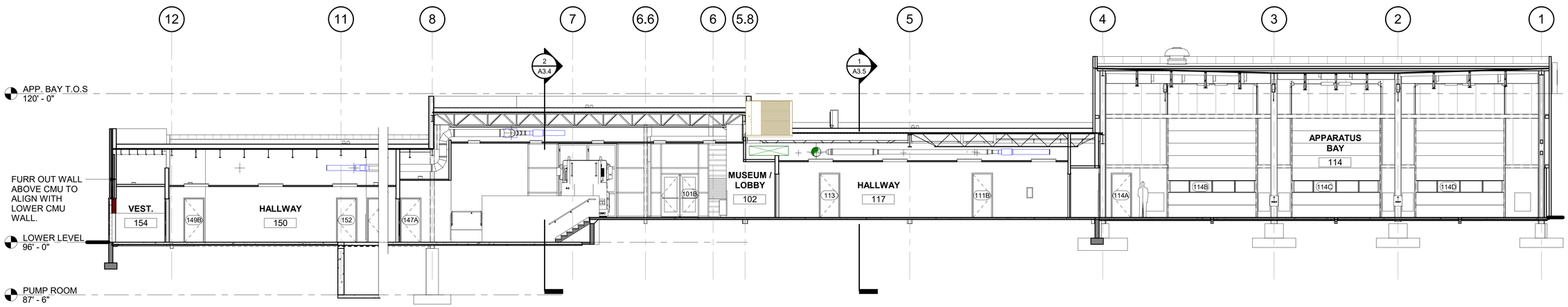

2 BUILDING SECTION H
1/8" = 1'-0"

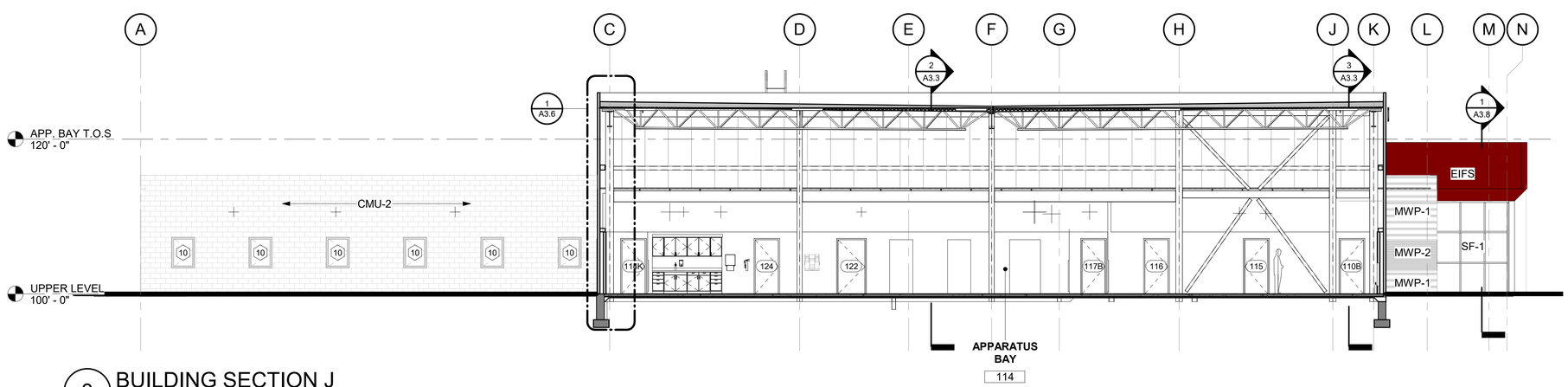

3 BUILDING SECTION J
1/8" = 1'-0"

STATE OF ALASKA 49TH
DAVE JAMES DREHER
A-14794
Registered Professional Architect
5/9/18

Burkhart Croft ARCHITECTS LLC
880 N Street Suite 302 | Anchorage Alaska 99501
T: 907.929.9334 | www.burkhart-croft.com

MATANUSKA-SUSITNA BOROUGH

MSB FIRE STATION 6-2

WASILLA, ALASKA

DATE: 5/9/2018
DRAWN: TOS
CHECKED: DJD
PROJECT: 1725
DRAWING TITLE: BUILDING SECTIONS
REVISIONS:
SHEET NO:
A3.5

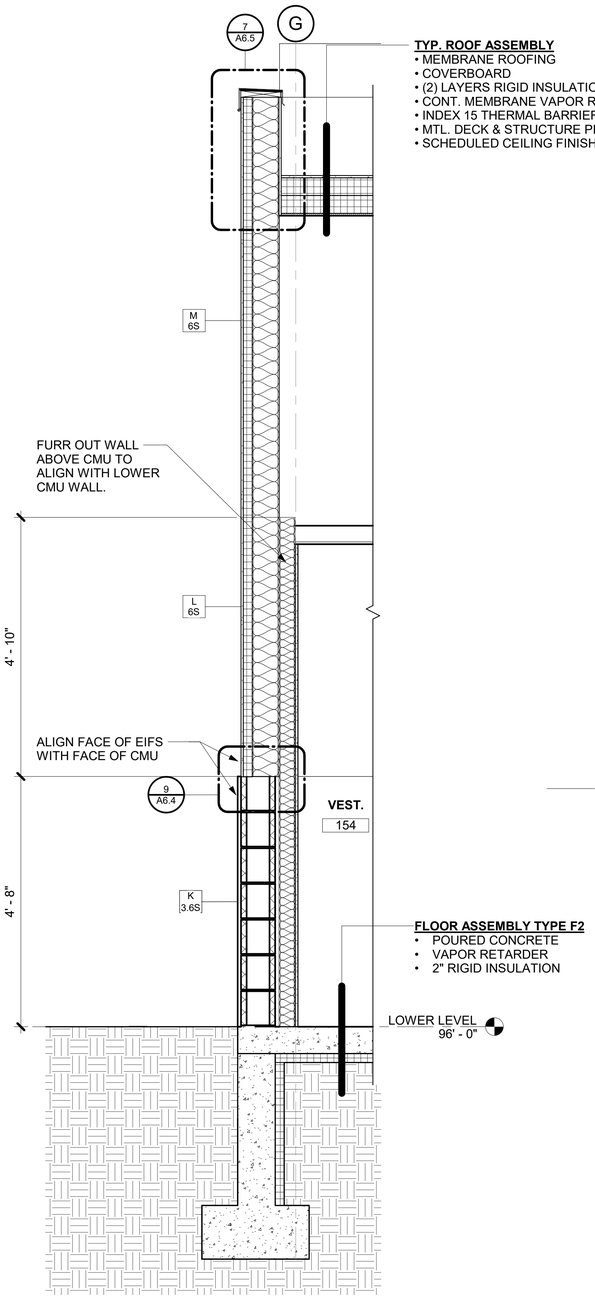

4 WALL SECTION - TRAINING ENTRY
3/4" = 1'-0"

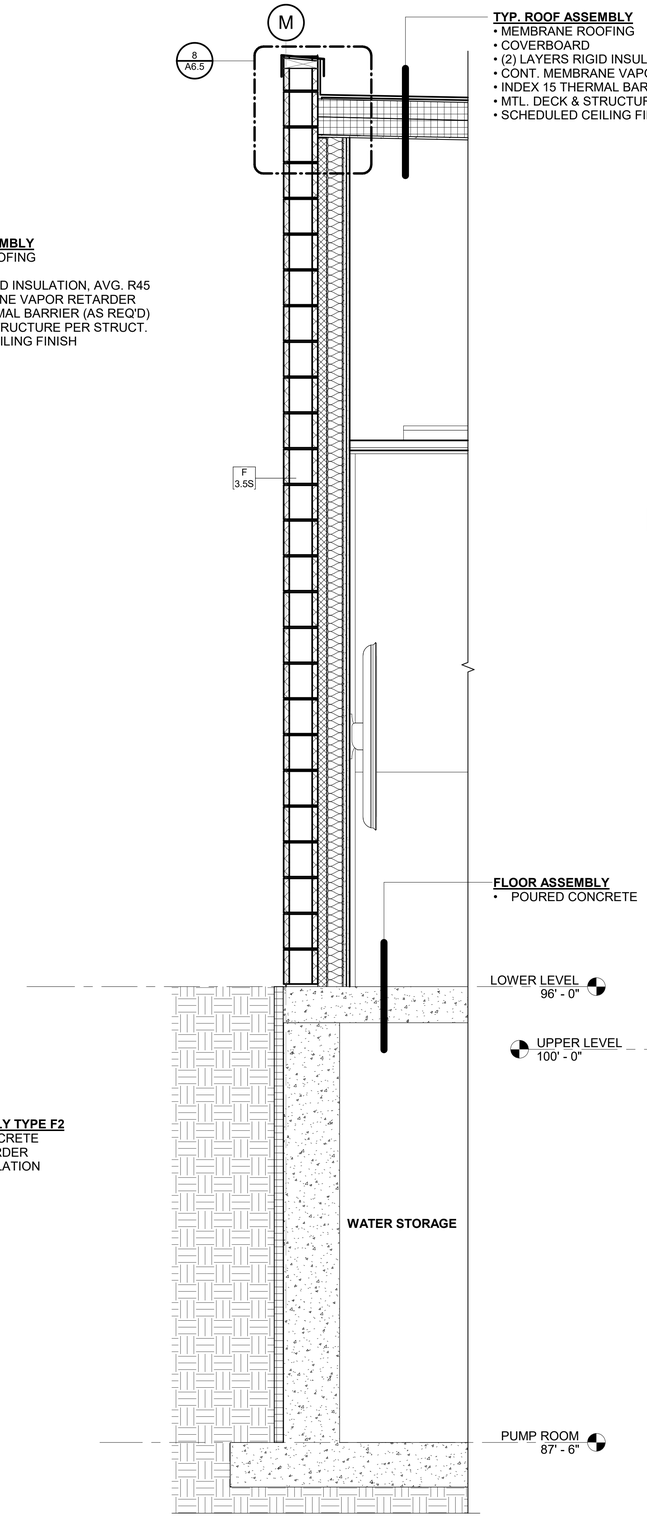

3 WALL SECTION - AREA B
3/4" = 1'-0"

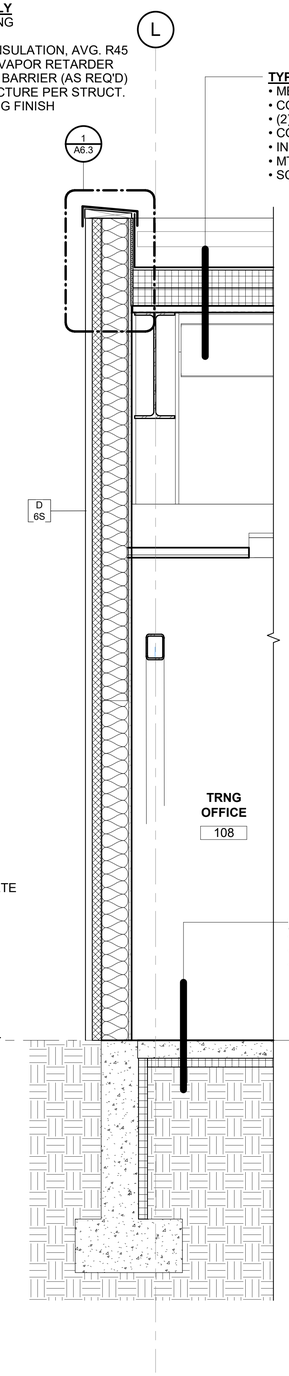

2 AREA A - WALL SECTION
3/4" = 1'-0"

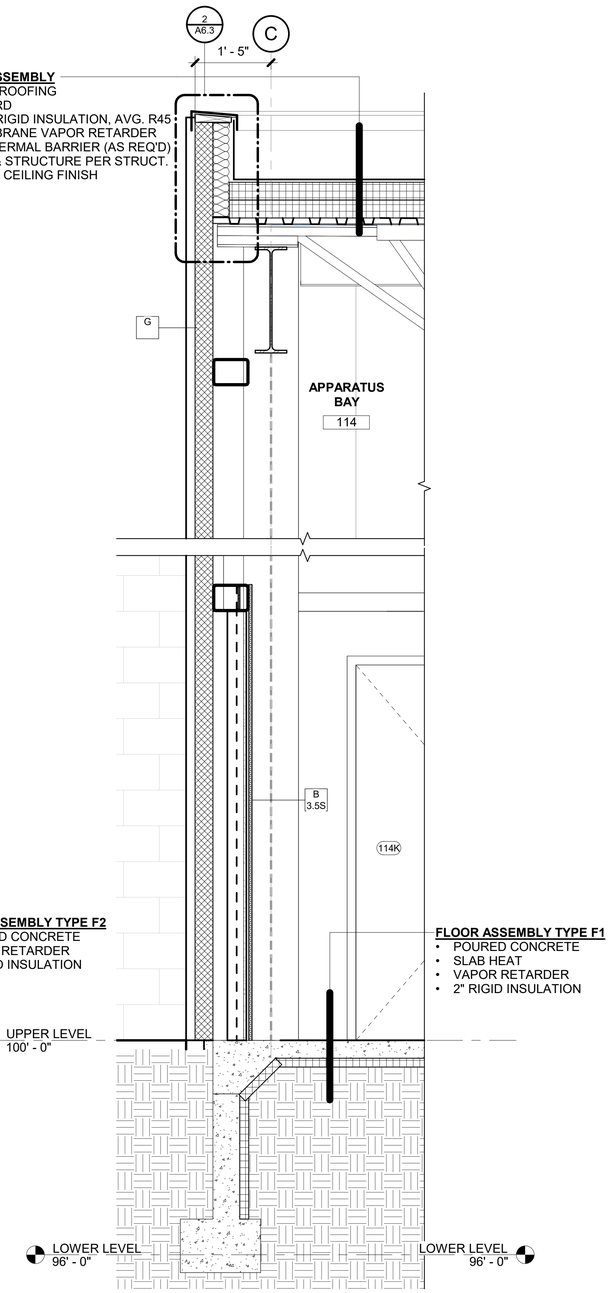

1 AREA A - WALL SECTION
3/4" = 1'-0"

STATE OF ALASKA 49TH
DAVE JAMES DREHER
A-14794
Registered Professional Architect
5/9/18

Burkhart Croft
ARCHITECTS LLC
880 N Street Suite 302 | Anchorage Alaska 99501
T: 907.929.9334 | www.burkhart-croft.com

MATANUSKA-SUSITNA BOROUGH

MSB FIRE STATION 6-2

WASILLA, ALASKA

DATE: 5/9/2018
DRAWN: JKJ
CHECKED: JBC
PROJECT: 1725
DRAWING TITLE: WALL SECTIONS
REVISIONS:
SHEET NO:
A3.6

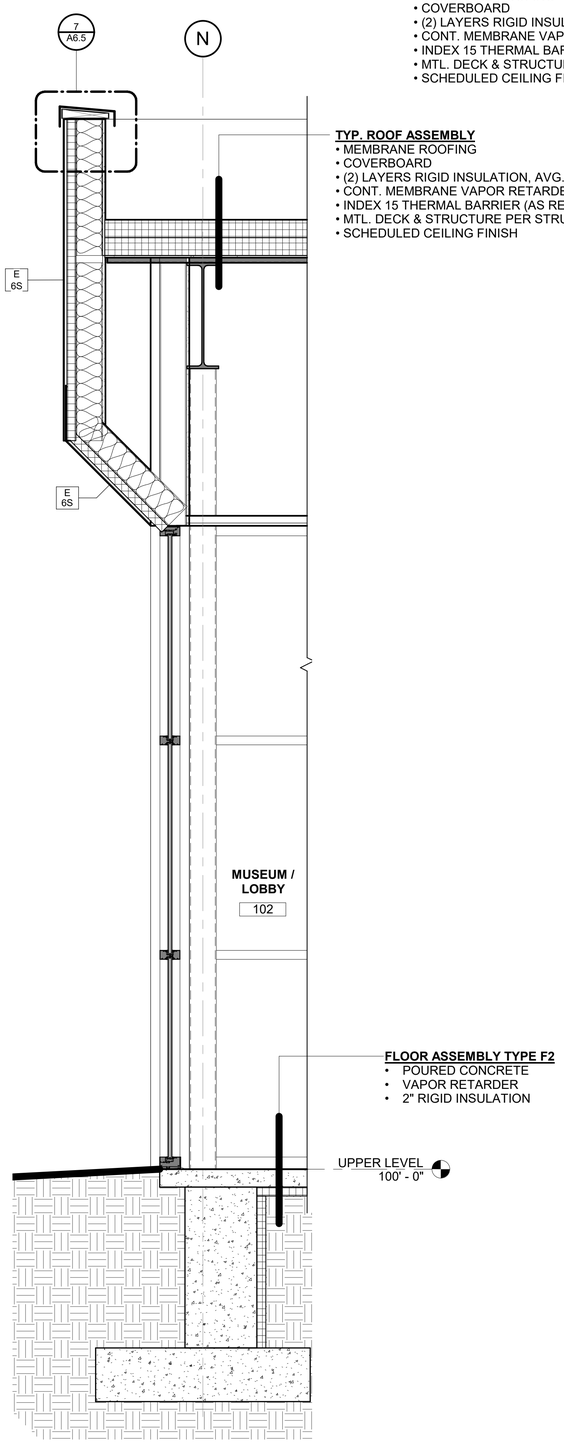

3 ENTRY DOOR - WALL SECTION
3/4" = 1'-0"

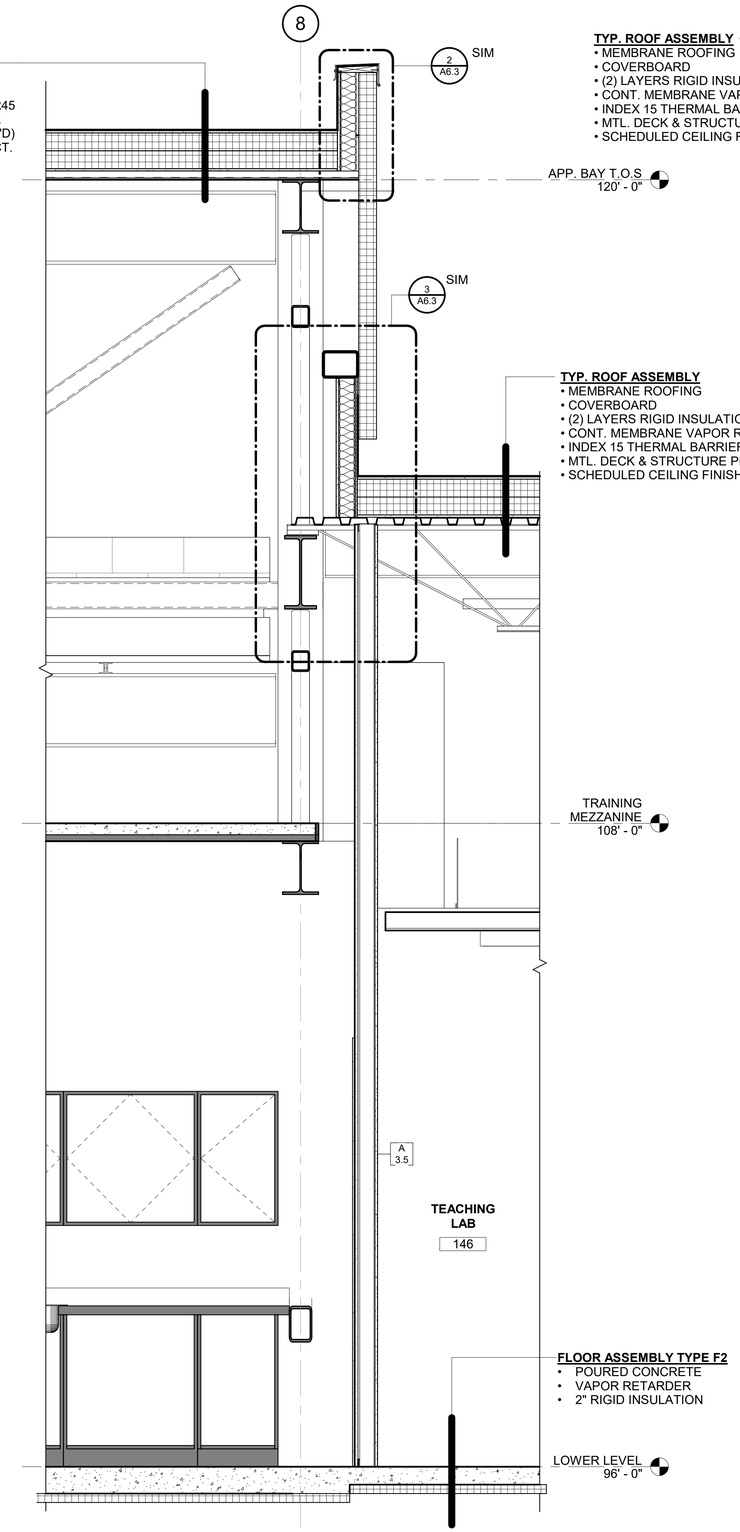

2 AREA C - WALL SECTION
3/4" = 1'-0"

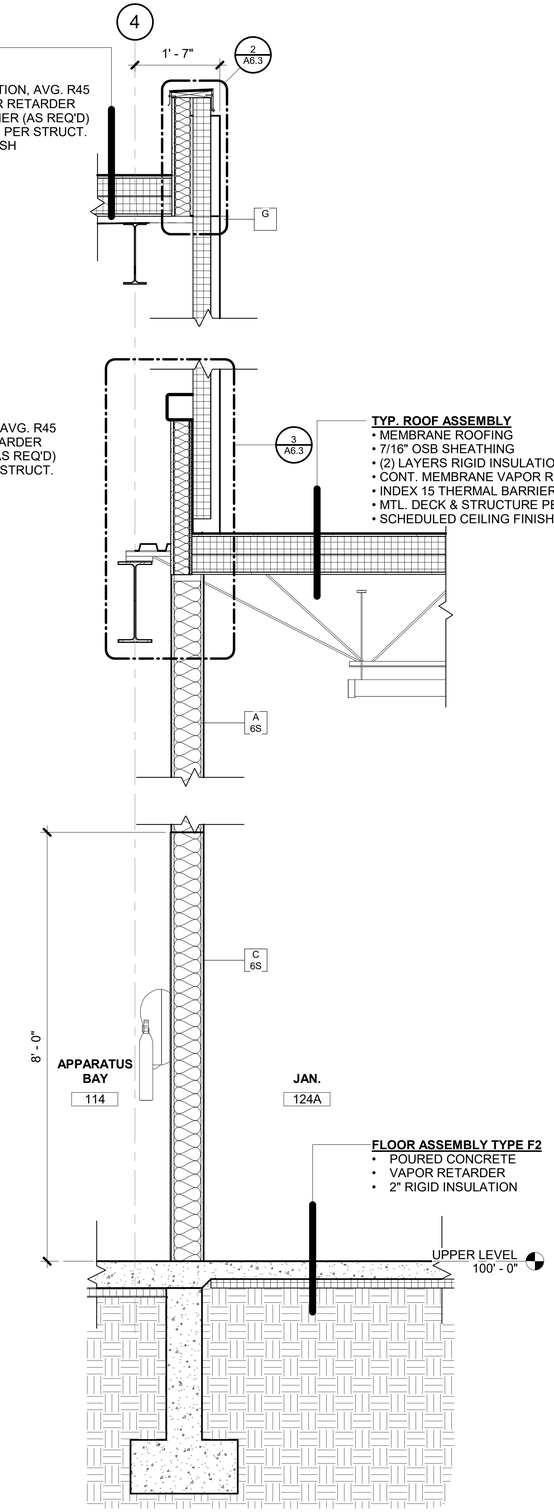

1 AREA A - WALL SECTION
3/4" = 1'-0"

STATE OF ALASKA
49TH
DAVE JAMES DREHER
A-14794
Registered Professional Architect
5/9/18

Burkhart Croft
ARCHITECTS LLC
880 N Street Suite 302 | Anchorage Alaska 99501
T: 907.929.9334 | www.burkhart-croft.com

MATANUSKA-SUSITNA BOROUGH
MSB FIRE STATION 6-2
WASILLA, ALASKA

DATE: 5/9/2018
DRAWN: TOS
CHECKED: DJD
PROJECT: 1725
DRAWING TITLE:
WALL SECTIONS

REVISIONS:

SHEET NO:
A3.7

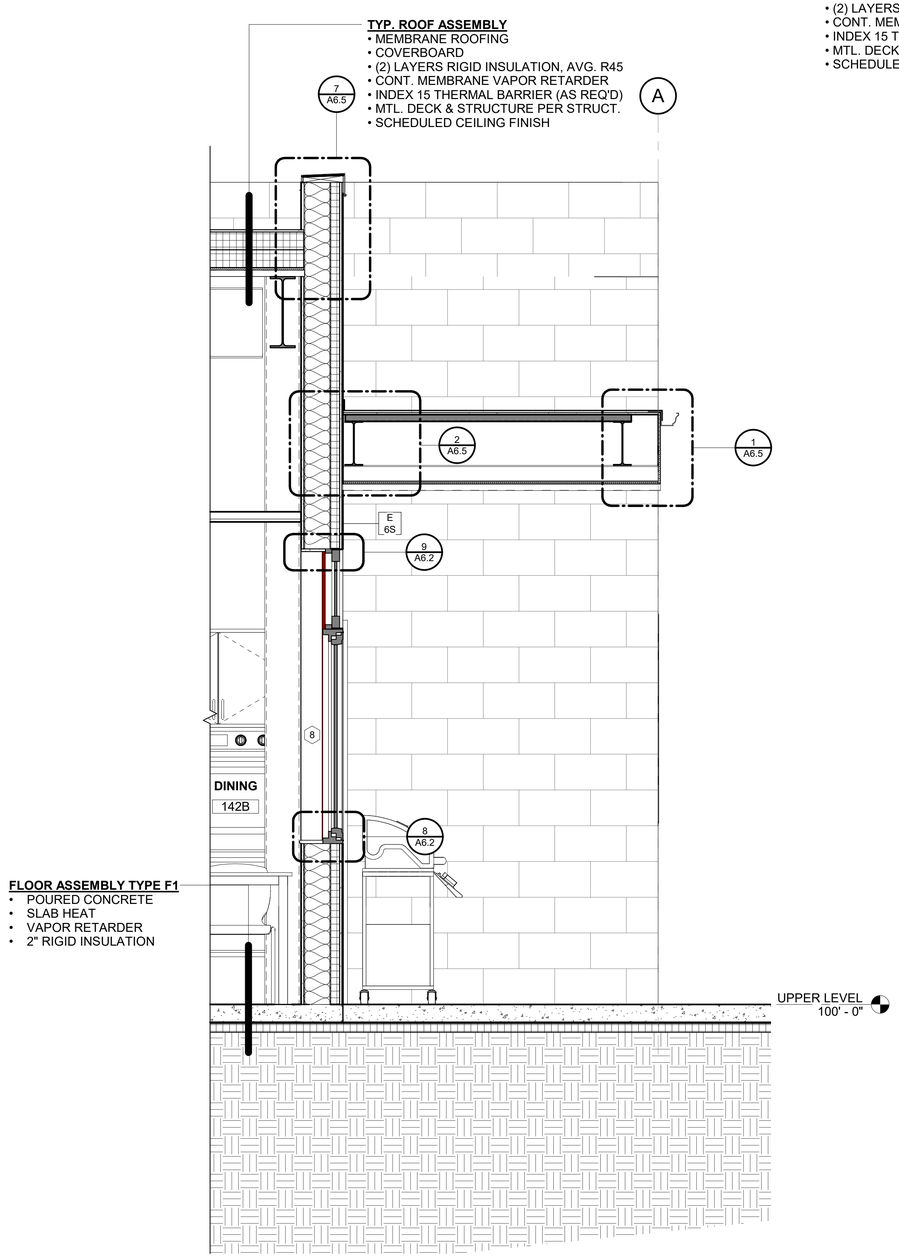

2 WALL SECTION @ AREA B
3/4" = 1'-0"

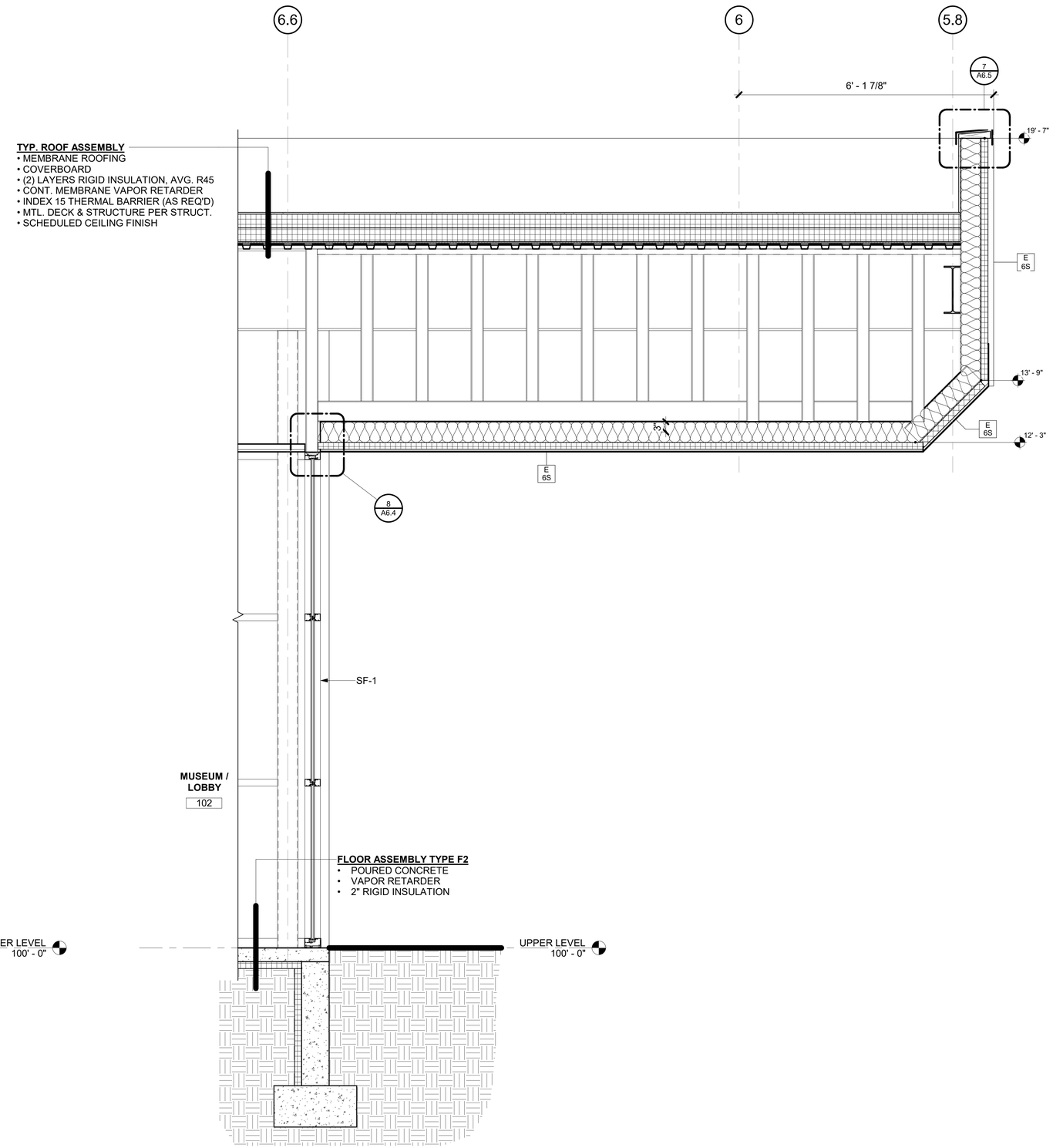

1 WALL SECTION @ ENTRY
3/4" = 1'-0"

STATE OF ALASKA 49TH
DAVE JAMES DREHER
A-14794
Registered Professional Architect
5/9/18

Burkhart Croft ARCHITECTS LLC
880 N Street Suite 302 | Anchorage Alaska 99501
T: 907.929.9334 | www.burkhart-croft.com

MATANUSKA-SUSITNA BOROUGH

MSB FIRE STATION 6-2

WASILLA, ALASKA

DATE: 5/9/2018
DRAWN: TOS
CHECKED: DJD
PROJECT: 1725
DRAWING TITLE:
WALL SECTIONS

REVISIONS:

SHEET NO:
A3.8

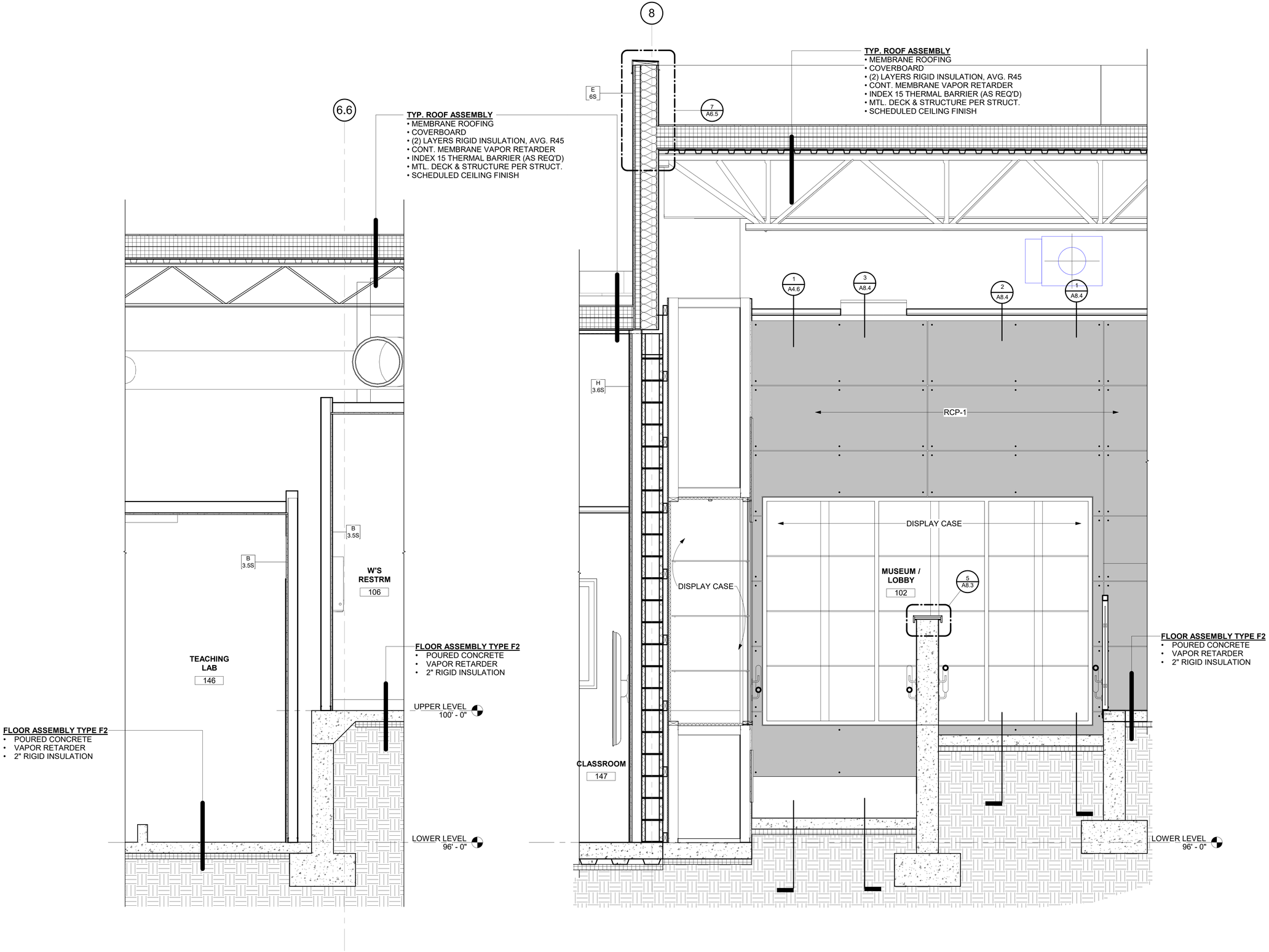

2 WALL SECTION @ TEACHING LAB
3/4" = 1'-0"

1 WALL SECTION @ MUSEUM RAMP
3/4" = 1'-0"

STATE OF ALASKA 49TH
DAVE JAMES DREHER
A-14794
Registered Professional Architect
5/9/18

Burkhart Croft
ARCHITECTS LLC
880 N Street Suite 302 | Anchorage Alaska 99501
T: 907.929.9334 | www.burkhart-croft.com

MATANUSKA-SUSITNA BOROUGH

MSB FIRE STATION 6-2

WASILLA, ALASKA

DATE: 5/9/2018
DRAWN: TOS
CHECKED: DJD
PROJECT: 1725
DRAWING TITLE:
WALL SECTIONS

REVISIONS:

SHEET NO:
A3.9

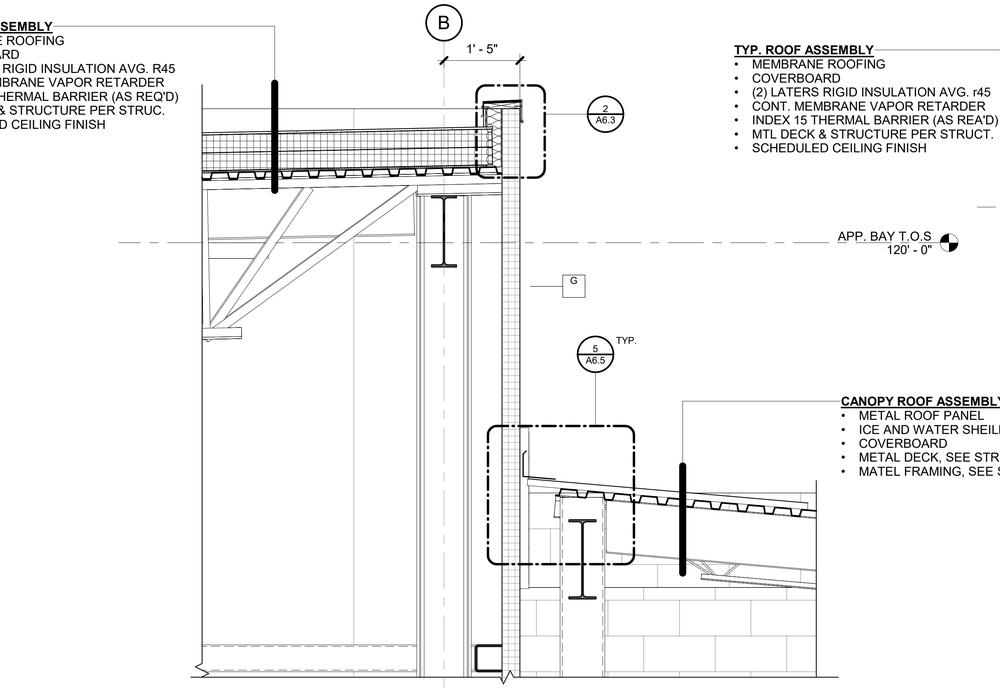

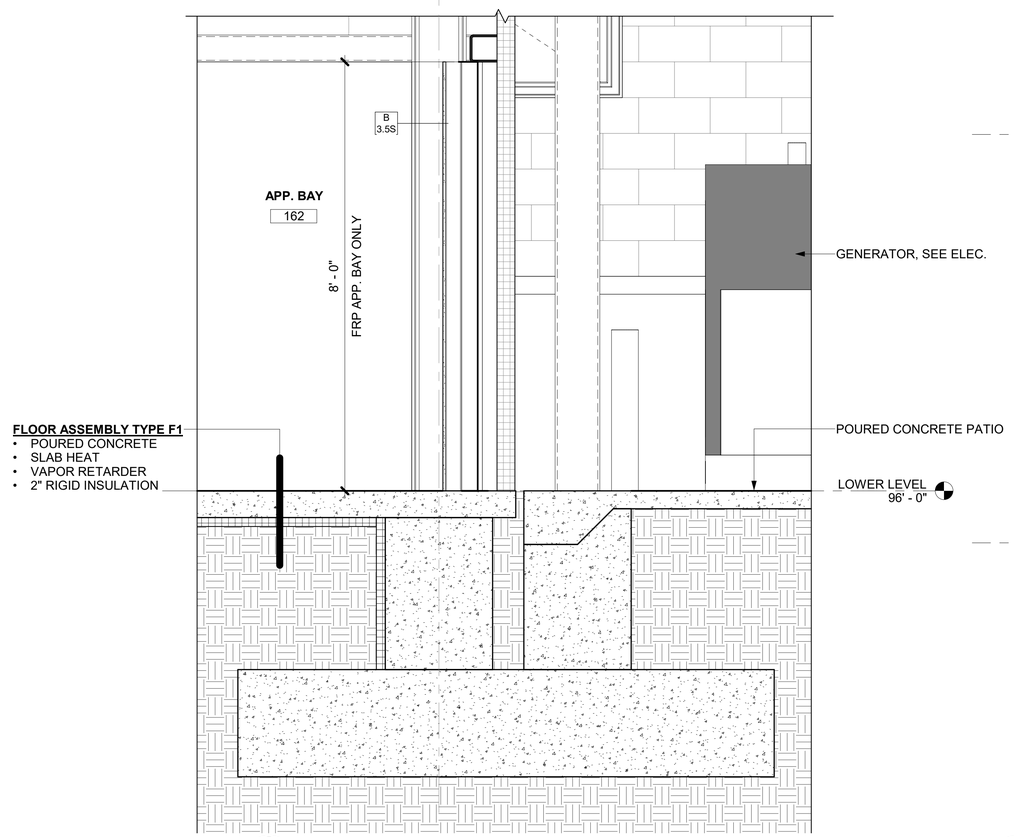

2 WALL SECTION @ CANOPY
3/4" = 1'-0"

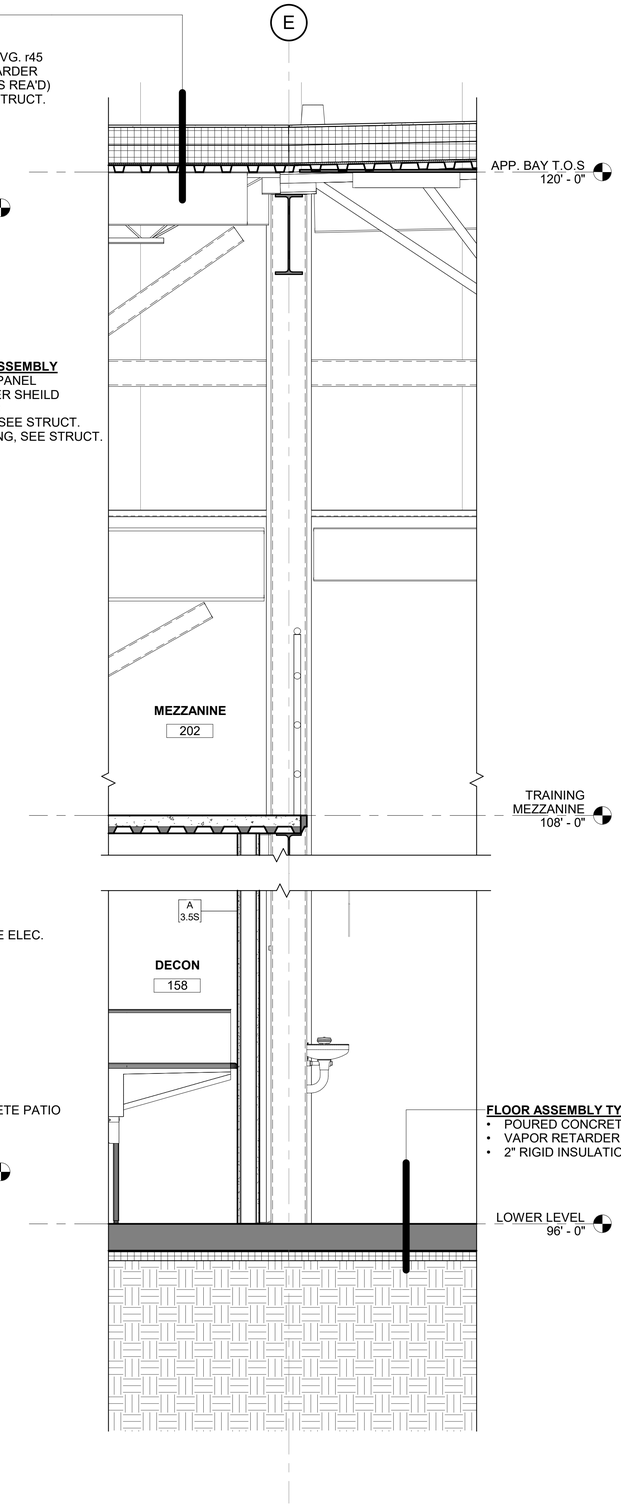

1 WALL SECTION @ GENERAL USE BAY
3/4" = 1'-0"

STATE OF ALASKA 49TH
DAVE JAMES DREHER
A-14794
Registered Professional Architect
5/9/18

Burkhart Croft
ARCHITECTS LLC
880 N Street Suite 302 | Anchorage Alaska 99501
T: 907.929.9334 | www.burkhart-croft.com

MATANUSKA-SUSITNA BOROUGH

MSB FIRE STATION 6-2

WASILLA, ALASKA

DATE: 5/9/2018
DRAWN: TOS
CHECKED: DJD
PROJECT: 1725
DRAWING TITLE:
WALL SECTIONS
REVISIONS:
SHEET NO:
A3.10

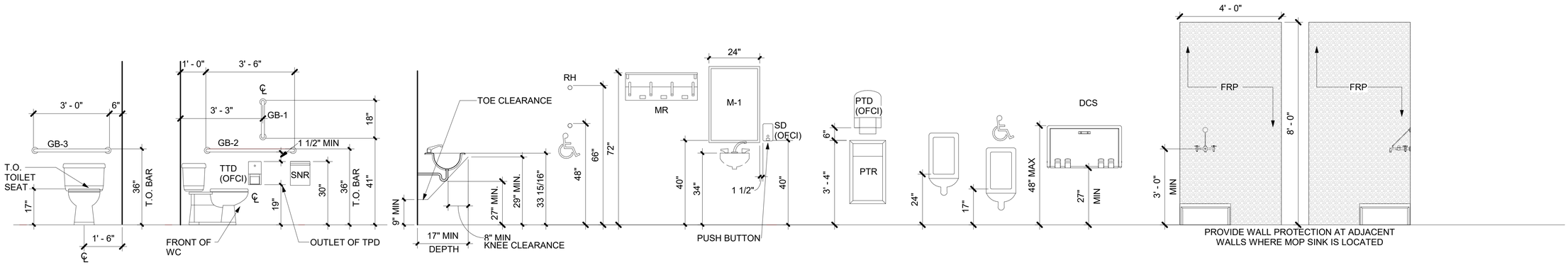

TYPICAL FIXTURE MOUNTING HEIGHTS AND ELEVATIONS

1/2" = 1'-0"

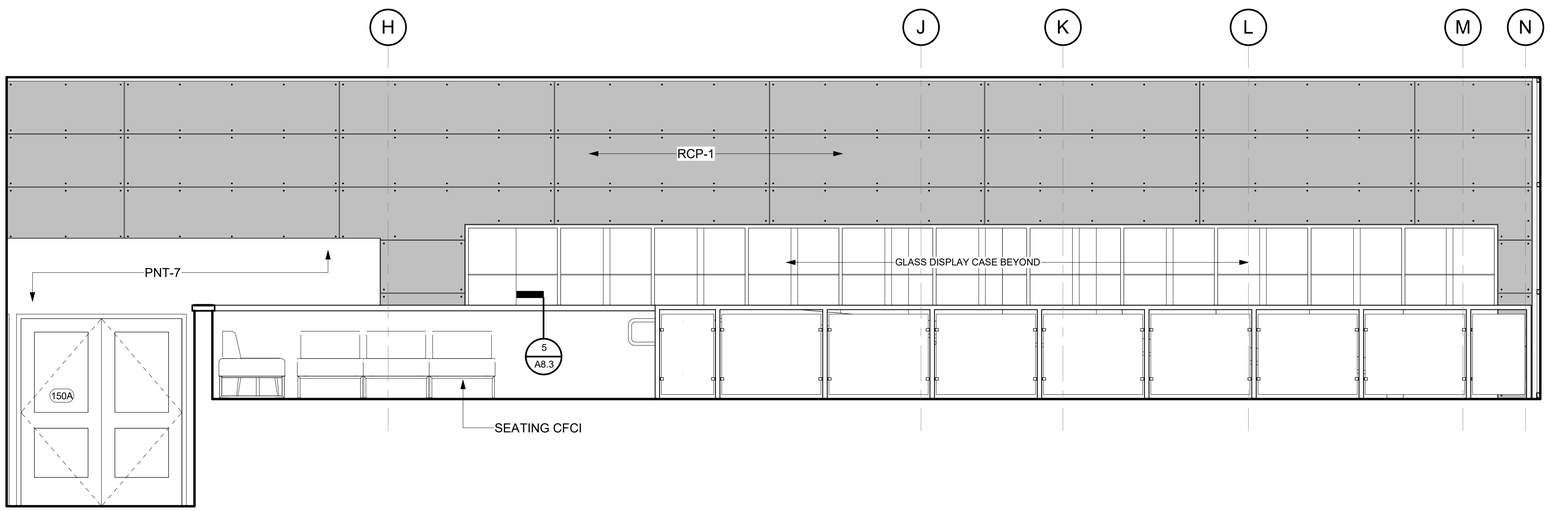

2 UPPER RAMP MUSEUM - EAST

3/8" = 1'-0"

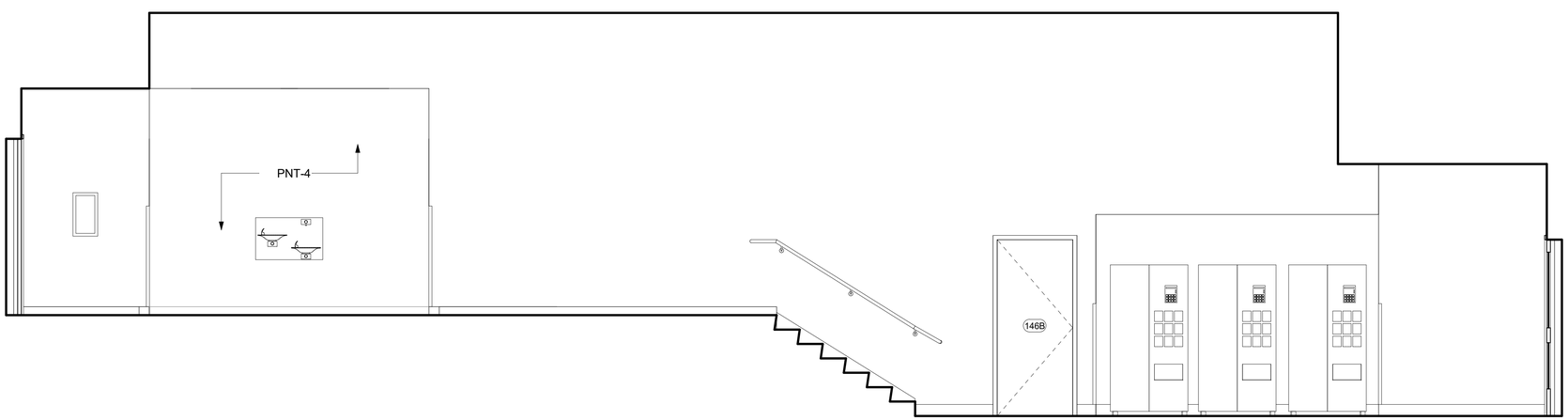

1 MUSEUM/LOBBY 102 - NORTH

3/8" = 1'-0"

STATE OF ALASKA 49TH DAVE JAMES DREHER A-14794 Registered Professional Architect 5/9/18

Burkhart Croft ARCHITECTS LLC
880 N Street Suite 302 | Anchorage Alaska 99501
T: 907.929.9334 | www.burkhart-croft.com

MATANUSKA-SUSITNA BOROUGH

MSB FIRE STATION 6-2

WASILLA, ALASKA

DATE: 5/9/2018

DRAWN: JKJ

CHECKED: JBC

PROJECT: 1725

DRAWING TITLE: INTERIOR ELEVATIONS

REVISIONS:

SHEET NO:

A4.1

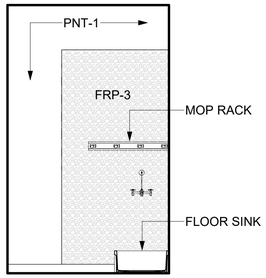

12 JAN 151 - EAST
3/8" = 1'-0"

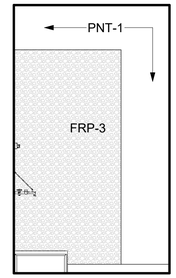

11 JAN 151 - SOUTH
3/8" = 1'-0"

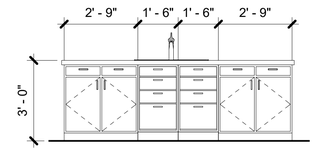

10 KITCHEN ISLAND - WEST
3/8" = 1'-0"

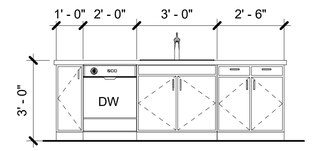

9 KITCHEN ISLAND - EAST
3/8" = 1'-0"

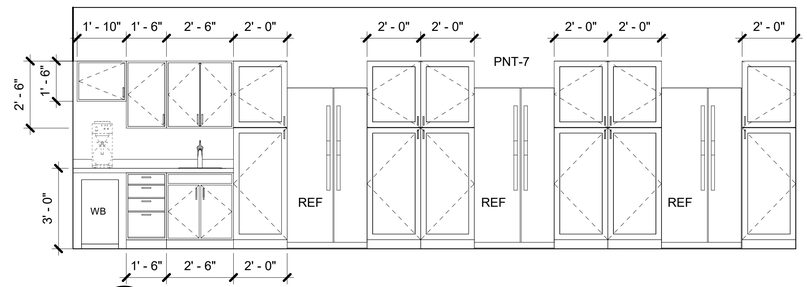

8 KITCHEN - SOUTH
3/8" = 1'-0"

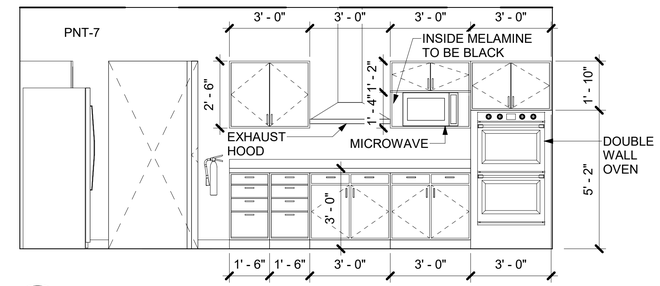

7 KITCHEN - WEST
3/8" = 1'-0"

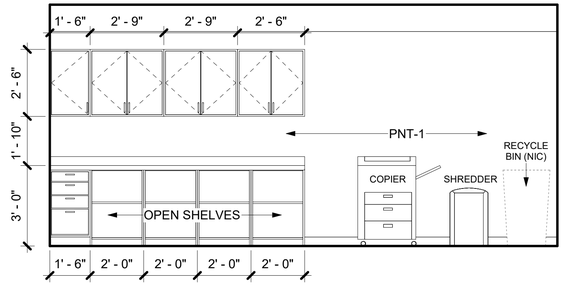

6 WORK ROOM 112 - SOUTH
3/8" = 1'-0"

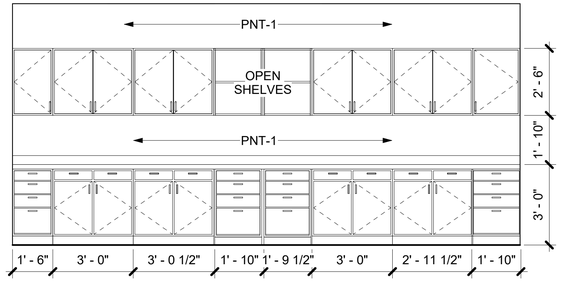

5 WORK ROOM 112 - NORTH
3/8" = 1'-0"

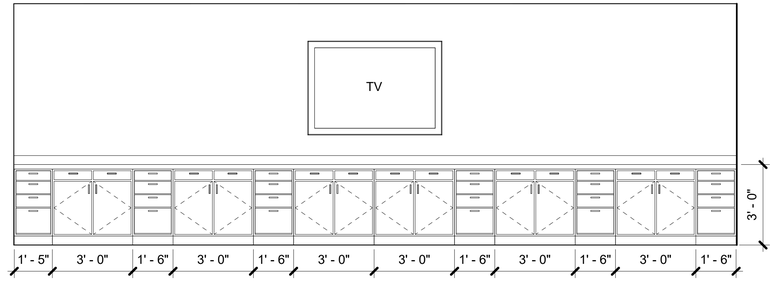

4 DAY ROOM 141 - SOUTH
3/8" = 1'-0"

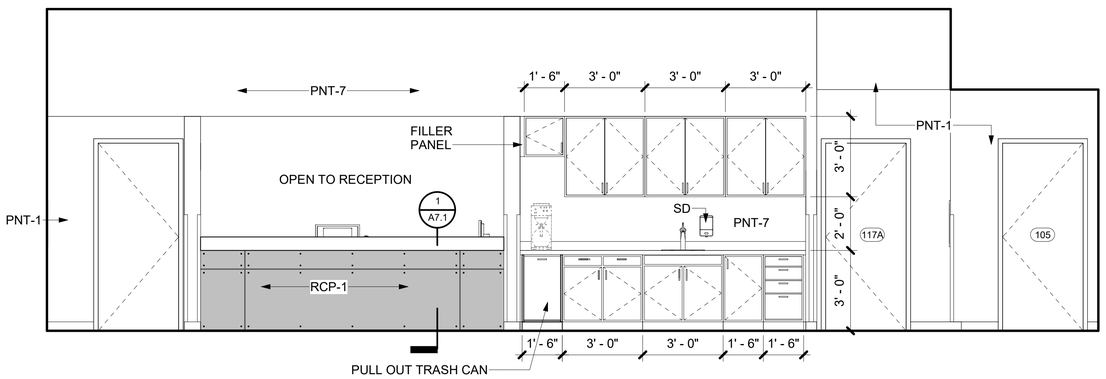

3 SNACK BAR + RECP - WEST
3/8" = 1'-0"

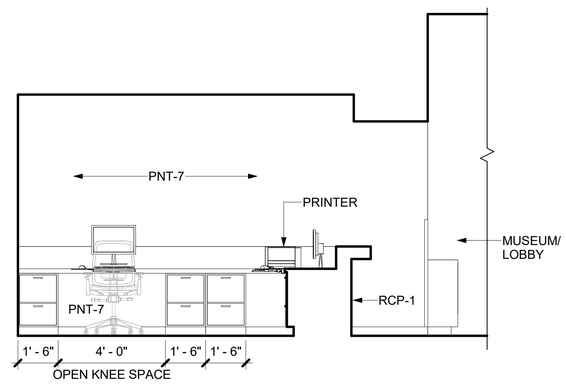

2 RECP - NORTH
3/8" = 1'-0"

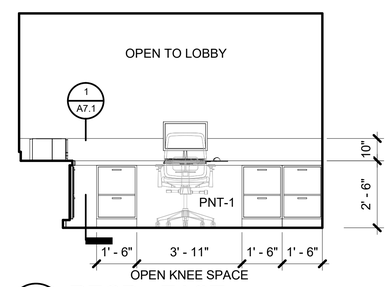

1 RECP - EAST
3/8" = 1'-0"

Burkhart Croft
ARCHITECTS LLC
880 N Street Suite 302 | Anchorage Alaska 99501
T: 907.929.9334 | www.burkhart-croft.com

MATANUSKA-SUSITNA BOROUGH

MSB FIRE STATION 6-2

WASILLA, ALASKA

DATE: 5/9/2018
DRAWN: JKJ
CHECKED: JBC
PROJECT: 1725
DRAWING TITLE:
INTERIOR ELEVATIONS
REVISIONS:
SHEET NO:
A4.2

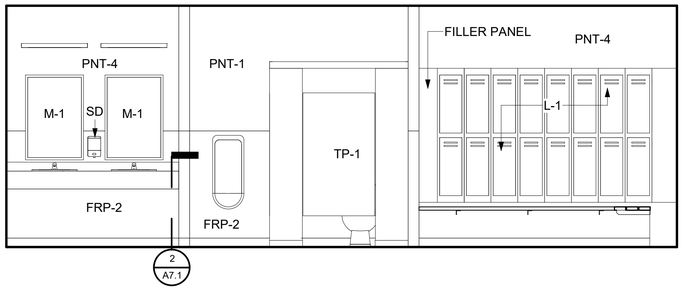

16 M'S LOCKER 119 - WEST
3/8" = 1'-0"

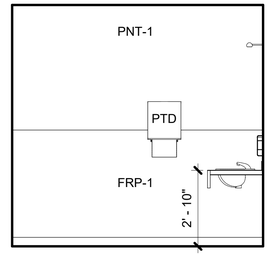

15 M'S LOCKER 119 - SOUTH
3/8" = 1'-0"

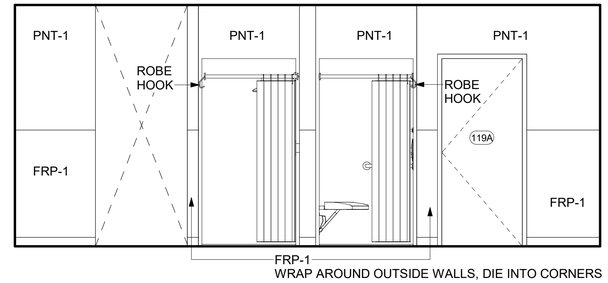

14 M'S LOCKER 119 - EAST
3/8" = 1'-0"

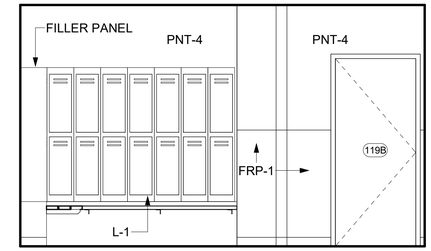

13 M'S LOCKER 119 - NORTH
3/8" = 1'-0"

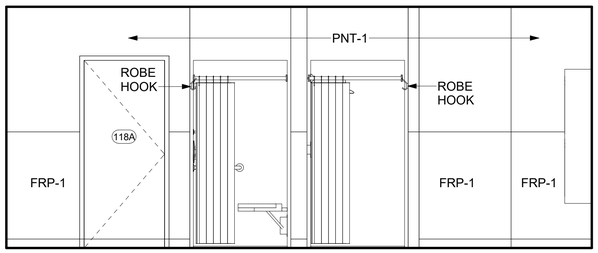

12 W'S LOCKER 118 - WEST
3/8" = 1'-0"

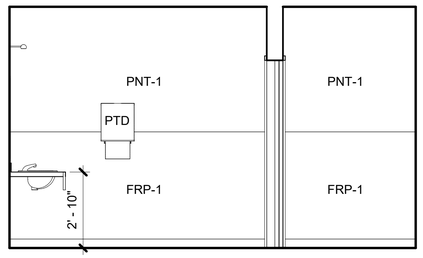

11 W'S LOCKER 118 - SOUTH
3/8" = 1'-0"

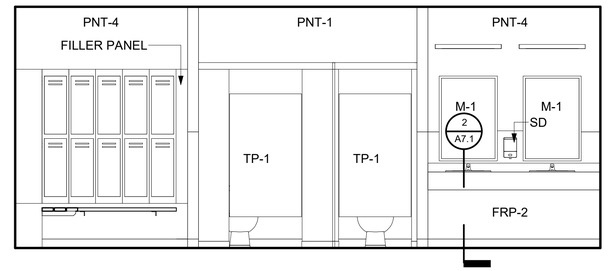

10 W'S LOCKER 118 - EAST
3/8" = 1'-0"

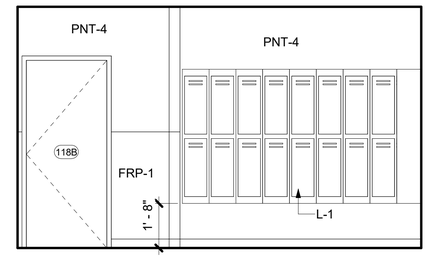

9 W'S LOCKER 118 - NORTH
3/8" = 1'-0"

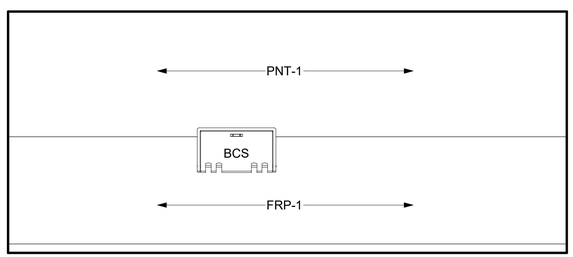

8 M'S RESTRM 105 - WEST
3/8" = 1'-0"

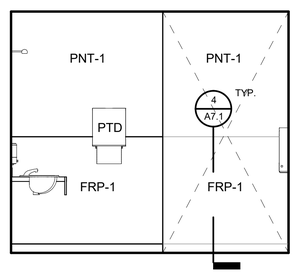

7 M'S RESTRM 105 - SOUTH
3/8" = 1'-0"

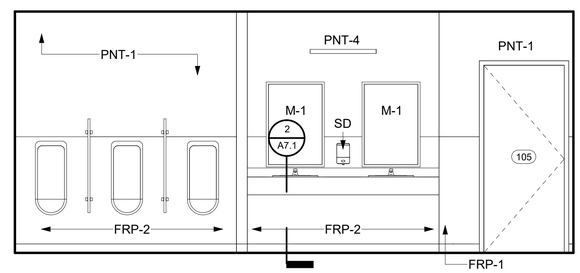

6 M'S RESTRM 105 - EAST
3/8" = 1'-0"

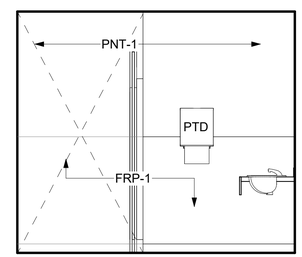

5 M'S RESTRM 105 - NORTH
3/8" = 1'-0"

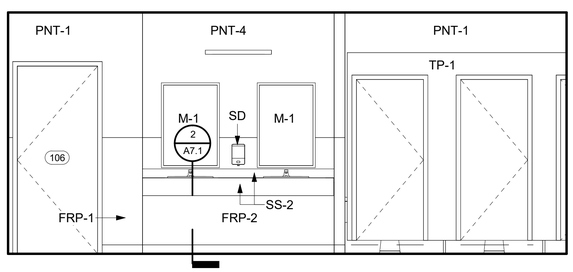

4 W'S RESTRM 106 - WEST
3/8" = 1'-0"

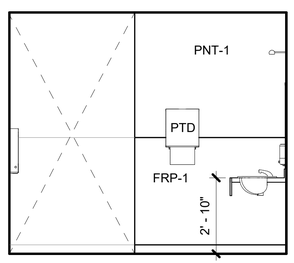

3 W'S RESTRM 106 - SOUTH
3/8" = 1'-0"

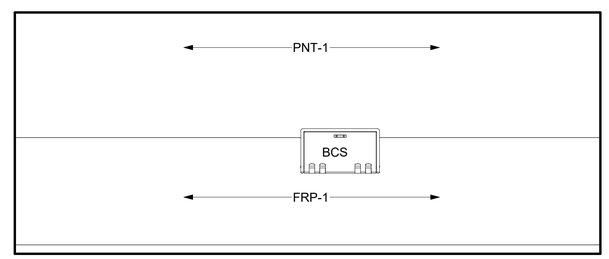

2 W'S RESTRM 106 - EAST
3/8" = 1'-0"

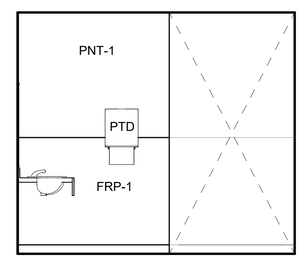

1 W'S RESTRM 106 - NORTH
3/8" = 1'-0"

STATE OF ALASKA 49TH
DAVE JAMES DREHER
A-14794
Registered Professional Architect
5/9/18

Burkhart Croft
ARCHITECTS LLC
880 N Street Suite 302 | Anchorage Alaska 99501
T: 907.929.9334 | www.burkhart-croft.com

MATANUSKA-SUSITNA BOROUGH

MSB FIRE STATION 6-2

WASILLA, ALASKA

DATE: 5/9/2018
DRAWN: TOS
CHECKED: DJD
PROJECT: 1725
DRAWING TITLE:
INTERIOR ELEVATIONS

REVISIONS:

SHEET NO:
A4.3

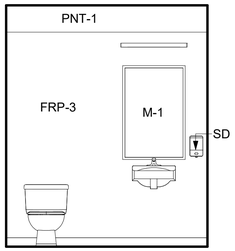

16 TOILET 159 - WEST
3/8" = 1'-0"

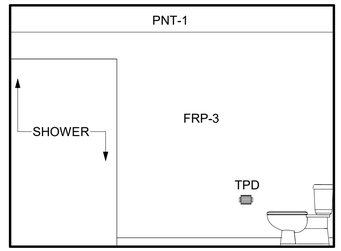

15 TOILET 159 - SOUTH
3/8" = 1'-0"

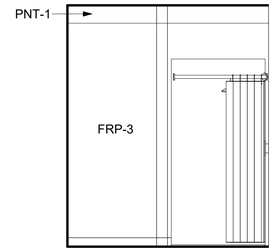

14 TOILET 159 - EAST
3/8" = 1'-0"

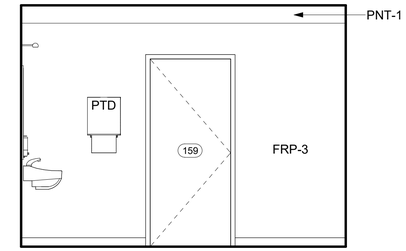

13 TOILET 159 - NORTH
3/8" = 1'-0"

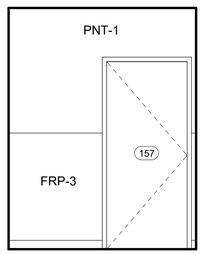

12 TOILET 157 - WEST
3/8" = 1'-0"

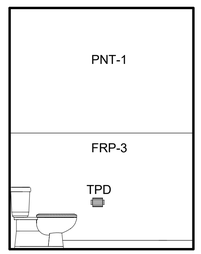

11 TOILET 157 - SOUTH
3/8" = 1'-0"

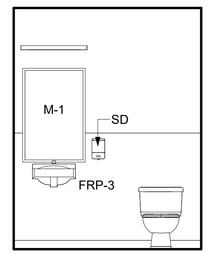

10 TOILET 157 - EAST
3/8" = 1'-0"

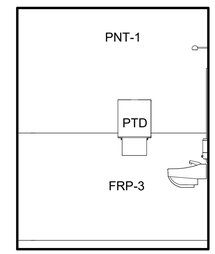

9 TOILET 157 - NORTH
3/8" = 1'-0"

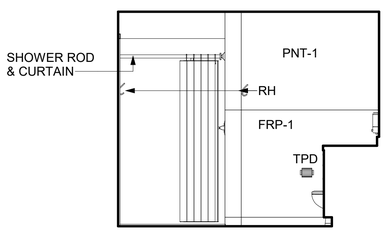

8 TOILET 138 - WEST (139 & 140 SIM.)
3/8" = 1'-0"

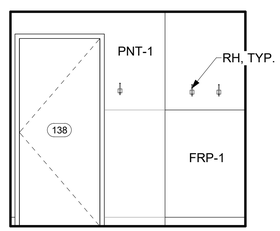

7 TOILET 138 - SOUTH (139 & 140 SIM.)
3/8" = 1'-0"

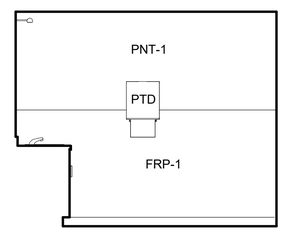

6 TOILET 138 - EAST (139 & 140 SIM.)
3/8" = 1'-0"

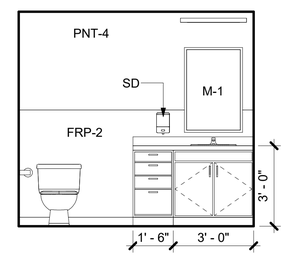

5 TOILET 138 - NORTH (139 & 140 SIM.)
3/8" = 1'-0"

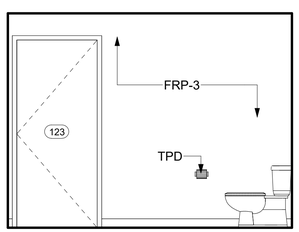

4 DECON TOILET 123 - WEST
3/8" = 1'-0"

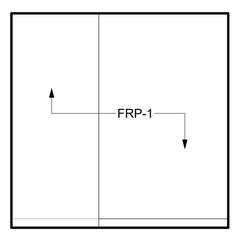

3 DECON TOILET 123 - SOUTH
3/8" = 1'-0"

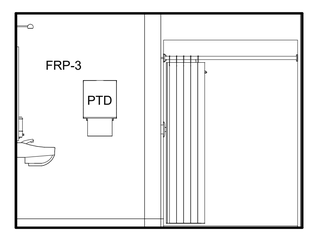

2 DECON TOILET 123 - EAST
3/8" = 1'-0"

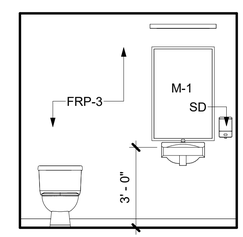

1 DECON TOILET 123 - NORTH
3/8" = 1'-0"

STATE OF ALASKA
49TH
DAVE JAMES DREHER
A-14794
Registered Professional Architect
5/9/18

Burkhart Croft
ARCHITECTS LLC
880 N Street Suite 302 | Anchorage Alaska 99501
T: 907.929.9334 | www.burkhart-croft.com

MATANUSKA-SUSITNA BOROUGH

MSB FIRE STATION 6-2

WASILLA, ALASKA

DATE: 5/9/2018
DRAWN: TOS
CHECKED: DJD
PROJECT: 1725
DRAWING TITLE:
INTERIOR ELEVATIONS
REVISIONS:
SHEET NO:
A4.4

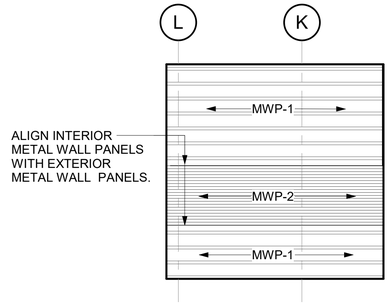

11 VEST 101 - WEST
1/4" = 1'-0"

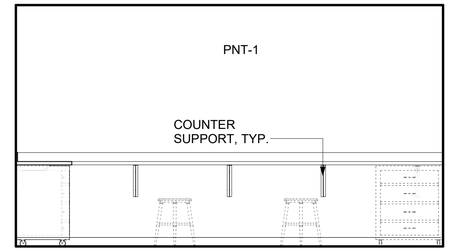

10 SM TOOL WORK SHOP 116 - SOUTH
3/8" = 1'-0"

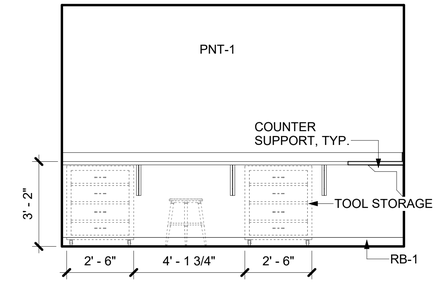

9 SM TOOL WORK SHOP 116 - EAST
3/8" = 1'-0"

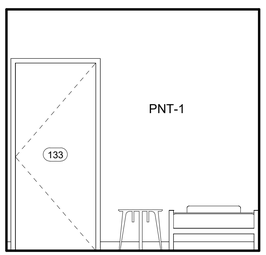

8 DORM 133 - WEST
3/8" = 1'-0"

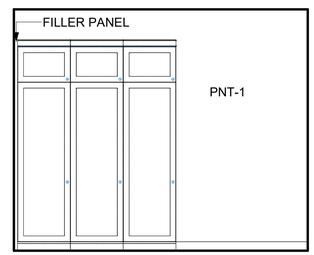

7 DORM 133 - SOUTH
3/8" = 1'-0"

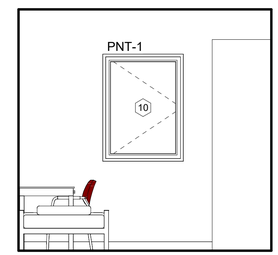

6 DORM 133 - EAST
3/8" = 1'-0"

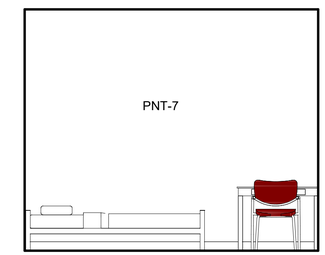

5 DORM 133 - NORTH
3/8" = 1'-0"

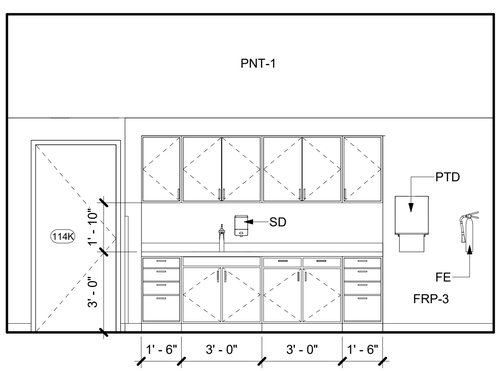

4 APP BAY KITCHENETTE 114 - EAST
3/8" = 1'-0"

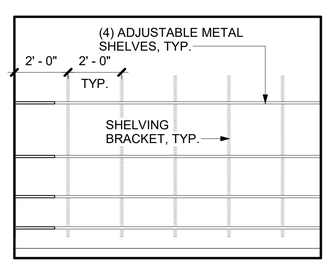

3 TRNG. LIBRARY 153 - EAST
3/8" = 1'-0"

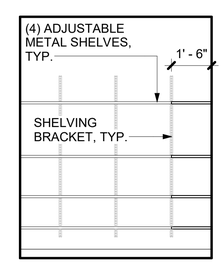

2 TRNG. LIBRARY 153 - NORTH
3/8" = 1'-0"

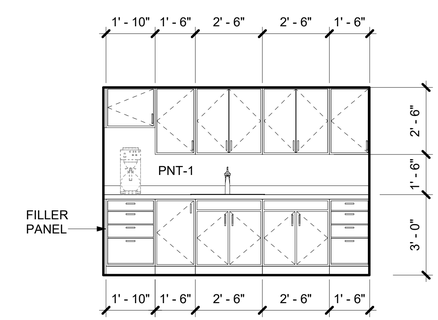

1 KITCHENETTE - SOUTH
3/8" = 1'-0"
IN GENERAL USE BAY 161

STATE OF ALASKA 49TH
DAVE JAMES DREHER
A-14794
Registered Professional Architect
5/9/18

Burkhart Croft ARCHITECTS LLC
880 N Street Suite 302 | Anchorage Alaska 99501
T: 907.929.9334 | www.burkhart-croft.com

MATANUSKA-SUSITNA BOROUGH
MSB FIRE STATION 6-2
WASILLA, ALASKA

DATE: 5/9/2018
DRAWN: TOS
CHECKED: DJD
PROJECT: 1725
DRAWING TITLE:
INTERIOR ELEVATIONS
REVISIONS:
SHEET NO:
A4.5

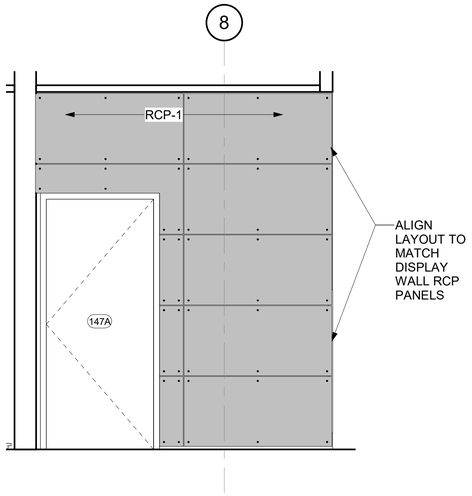

3 WALL @ BTM OF RAMP
1/2" = 1'-0"

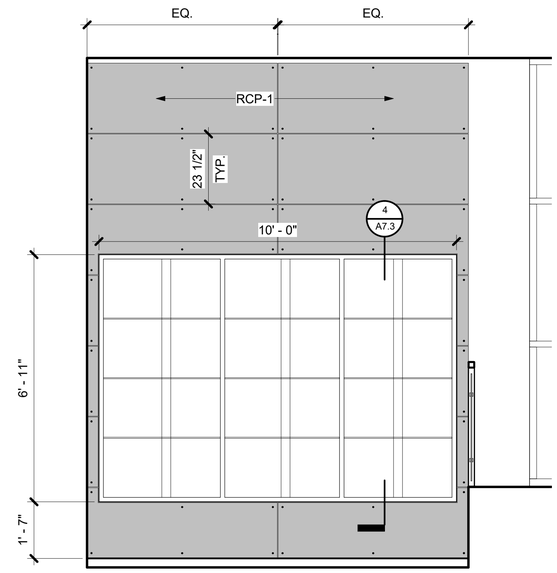

2 SMALL DISPLAY CASE ELEVATION
1/2" = 1'-0"

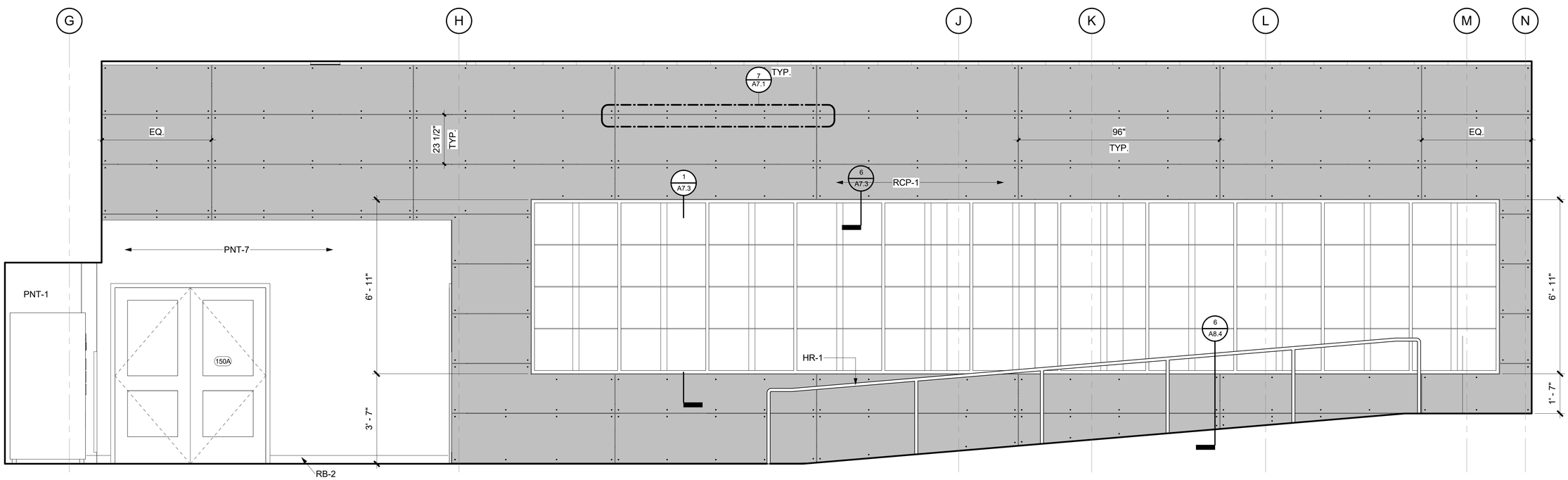

1 LARGE DISPLAY CASE ELEVATION
1/2" = 1'-0"

STATE OF ALASKA
49TH
DAVE JAMES DREHER
A-14794
Registered Professional Architect
5/9/18

Burkhart Croft
ARCHITECTS LLC
880 N Street Suite 302 | Anchorage Alaska 99501
T: 907.929.9334 | www.burkhart-croft.com

MATANUSKA-SUSITNA BOROUGH

MSB FIRE STATION 6-2

WASILLA, ALASKA

DATE:	5/9/2018
DRAWN:	TOS
CHECKED:	DJD
PROJECT:	1725
DRAWING TITLE:	INTERIOR ELEVATIONS DISPLAY CASE
REVISIONS:	
SHEET NO:	**A4.6**

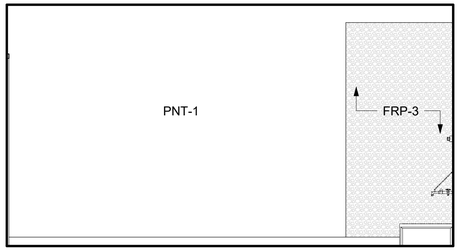

7 LNDRY/JAN 144 - EAST
3/8" = 1'-0"

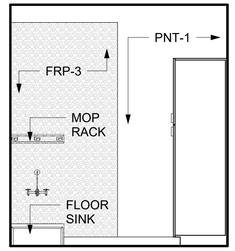

6 LNDRY/JAN 144 - SOUTH
3/8" = 1'-0"

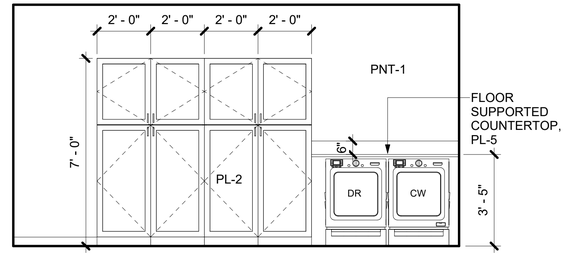

5 LAUNDRY/ JAN 144 - WEST
3/8" = 1'-0"

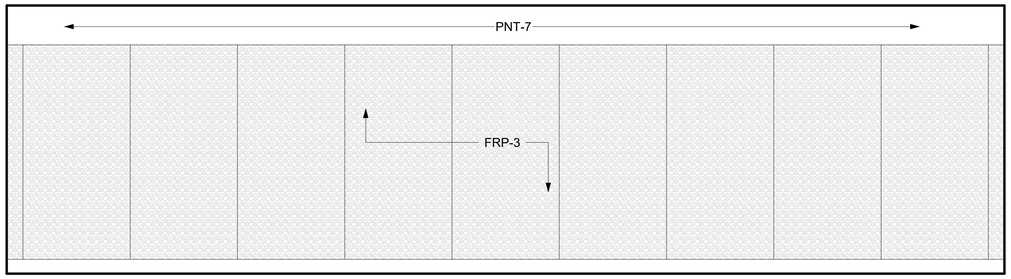

4 TEACHING LAB 146 - WEST
3/8" = 1'-0"

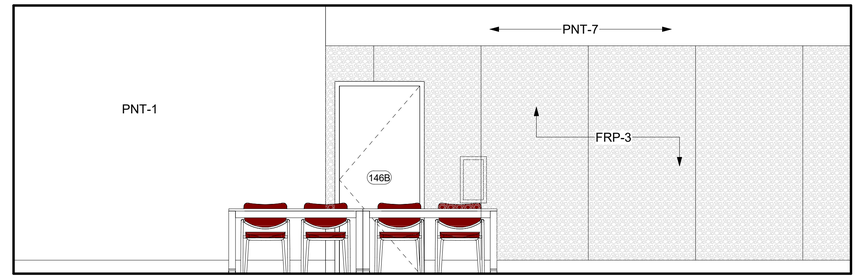

3 TEACHING LAB 146 - SOUTH
3/8" = 1'-0"

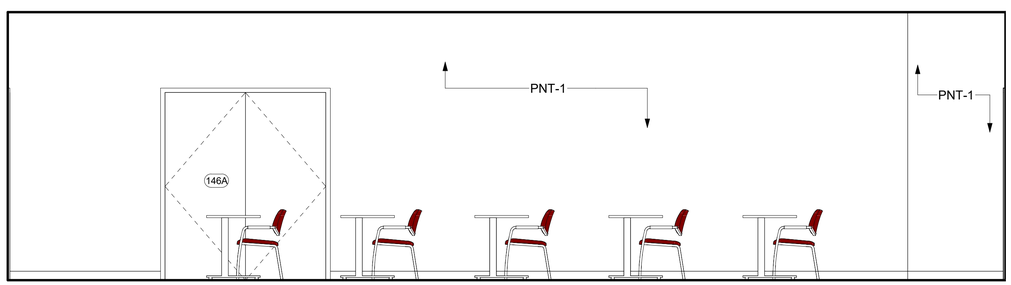

2 TEACHING LAB 146 - EAST
3/8" = 1'-0"

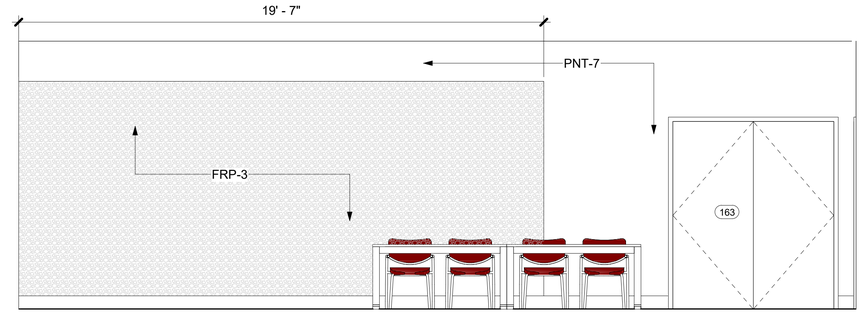

1 TEACHING LAB 146 - NORTH
3/8" = 1'-0"

STATE OF ALASKA
49TH
DAVE JAMES DREHER
A-14794
Registered Professional Architect
5/9/18

Burkhart Croft
ARCHITECTS LLC
880 N Street Suite 302 | Anchorage Alaska 99501
T: 907.929.9334 | www.burkhart-croft.com

MATANUSKA-SUSITNA BOROUGH
MSB FIRE STATION 6-2
WASILLA, ALASKA

DATE: 5/9/2018
DRAWN: Author
CHECKED: Checker
PROJECT: 1725
DRAWING TITLE:
INTERIOR ELEVATIONS
REVISIONS:
SHEET NO:
A4.7

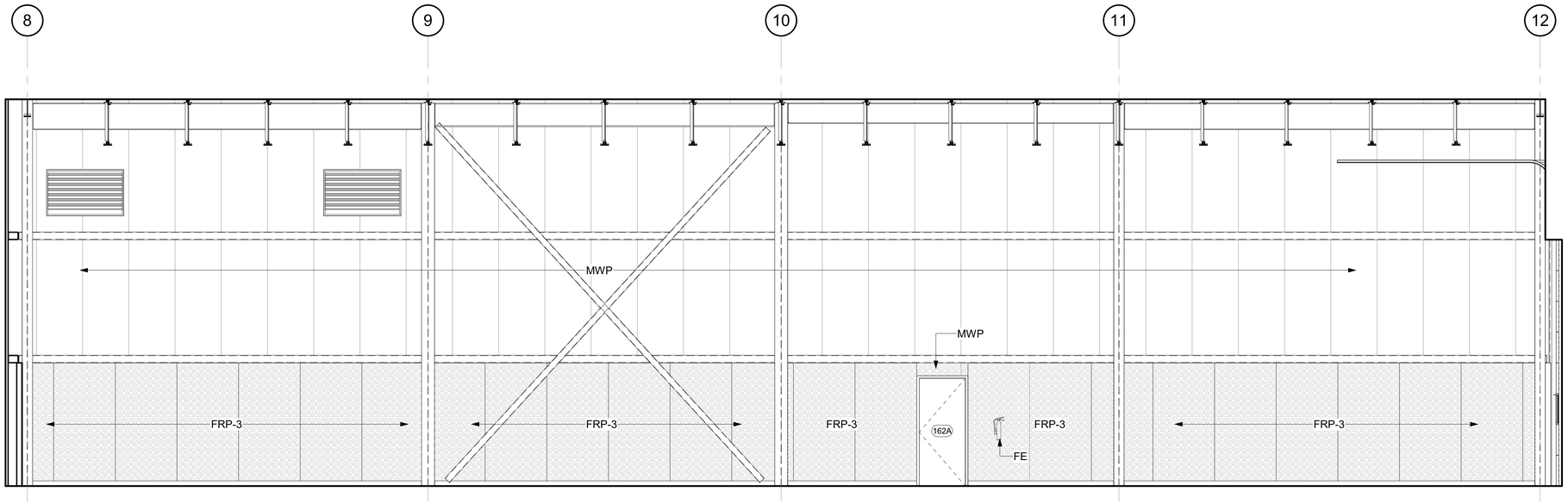

3 APP BAY 161/162 - NORTH
1/4" = 1'-0"

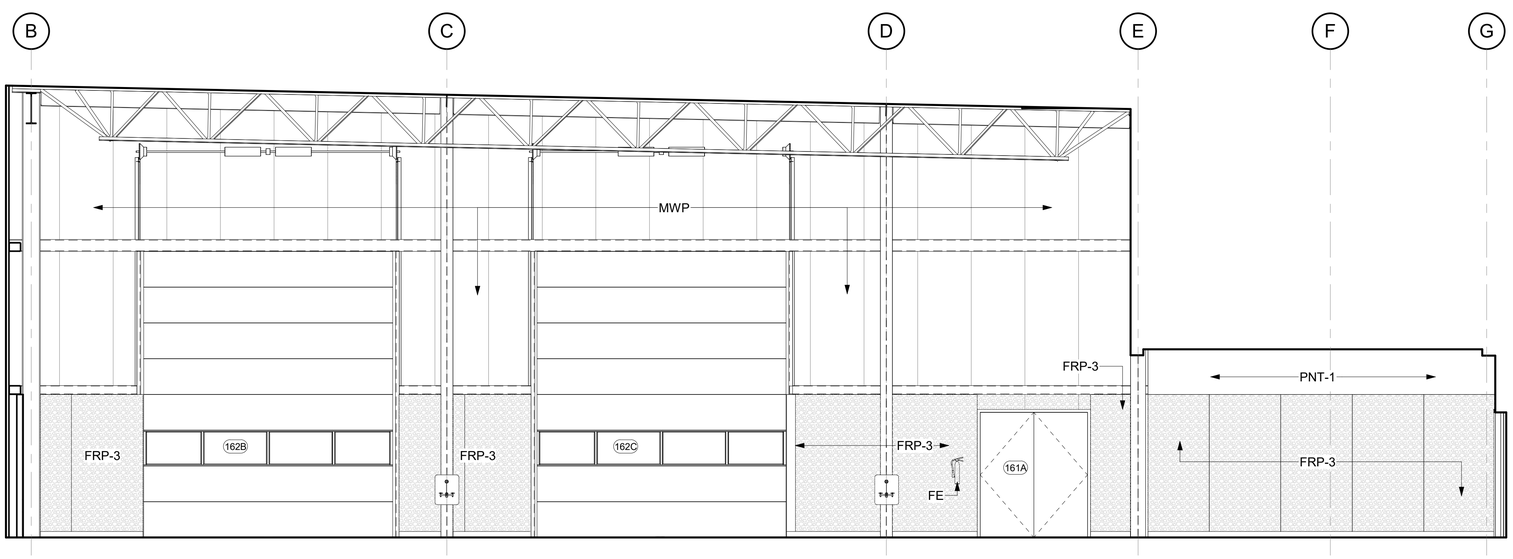

2 APP BAY 161/162 - EAST
1/4" = 1'-0"

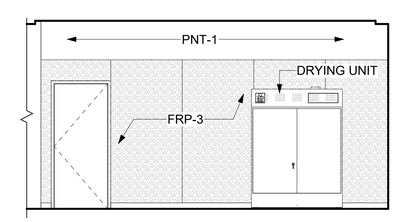

1 STORAGE 155 - EAST
1/4" = 1'-0"

STATE OF ALASKA
49TH
DAVE JAMES DREHER
A-14794
Registered Professional Architect
5/9/18

Burkhart Croft
ARCHITECTS LLC
880 N Street Suite 302 | Anchorage Alaska 99501
T: 907.929.9334 | www.burkhart-croft.com

MATANUSKA-SUSITNA BOROUGH

MSB FIRE STATION 6-2

WASILLA, ALASKA

DATE: 5/9/2018
DRAWN: KSA
CHECKED: DJD
PROJECT: 1725
DRAWING TITLE:
INTERIOR ELEVATIONS
REVISIONS:
SHEET NO:
A4.8

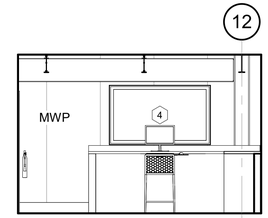

4 CONTROL ROOM 301 - NORTH
1/4" = 1'-0"

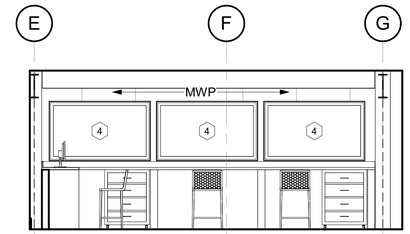

3 CONTROL ROOM 301 - EAST
1/4" = 1'-0"

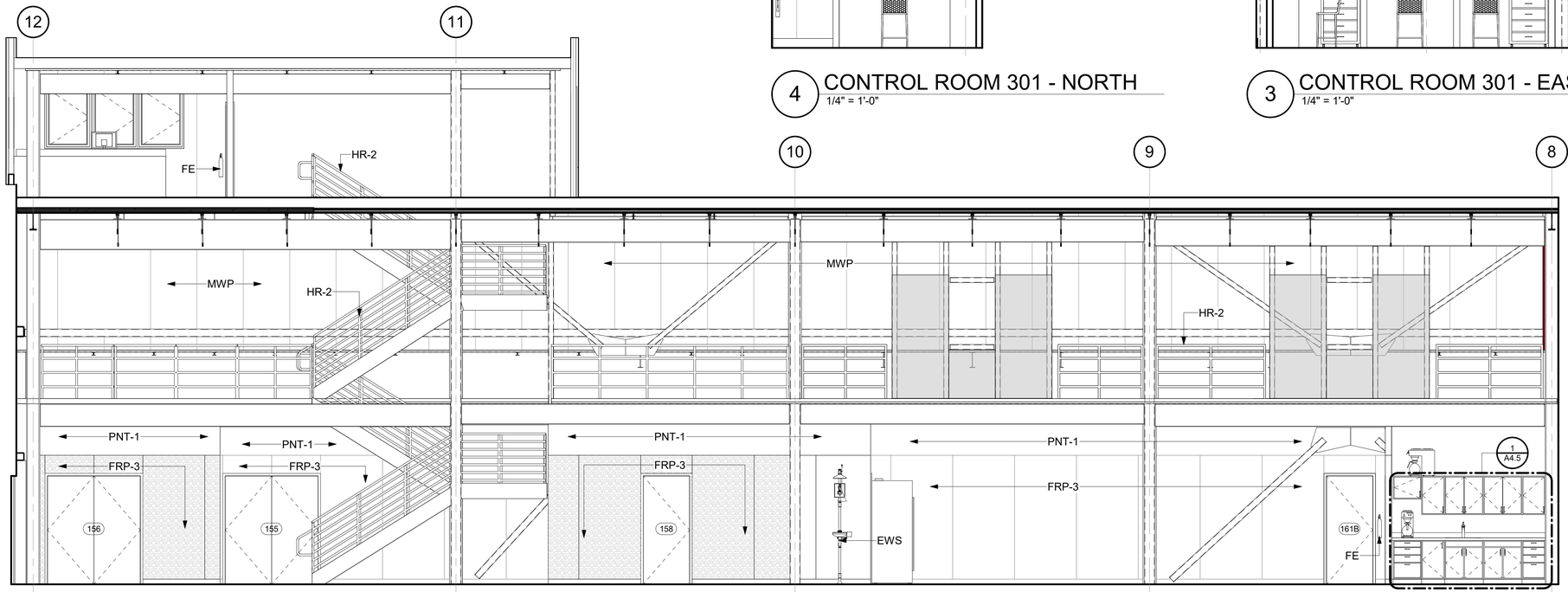

2 APP BAY 161/162 - SOUTH
1/4" = 1'-0"

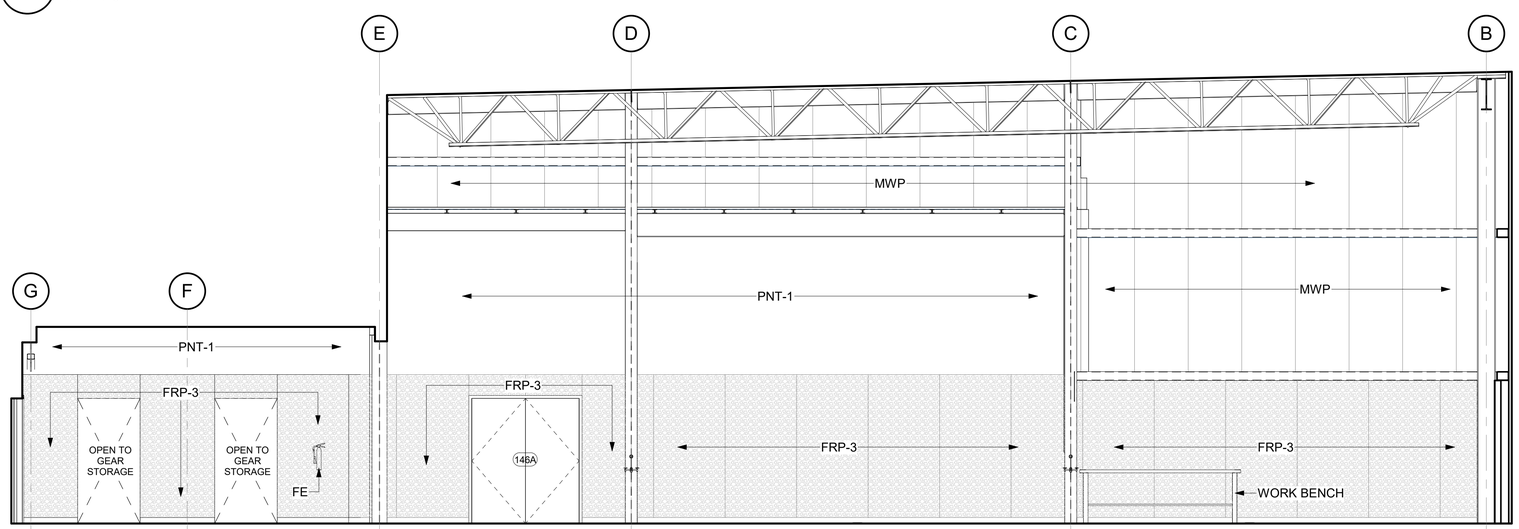

1 APP BAY 161/162 - WEST
1/4" = 1'-0"

STATE OF ALASKA 49TH
DAVE JAMES DREHER
A-14794
Registered Professional Architect
5/9/18

Burkhart Croft ARCHITECTS LLC
880 N Street Suite 302 | Anchorage Alaska 99501
T: 907.929.9334 | www.burkhart-croft.com

MATANUSKA-SUSITNA BOROUGH

MSB FIRE STATION 6-2

WASILLA, ALASKA

DATE:	5/9/2018
DRAWN:	KSA
CHECKED:	DJD
PROJECT:	1725
DRAWING TITLE:	INTERIOR ELEVATIONS
REVISIONS:	
SHEET NO:	**A4.9**

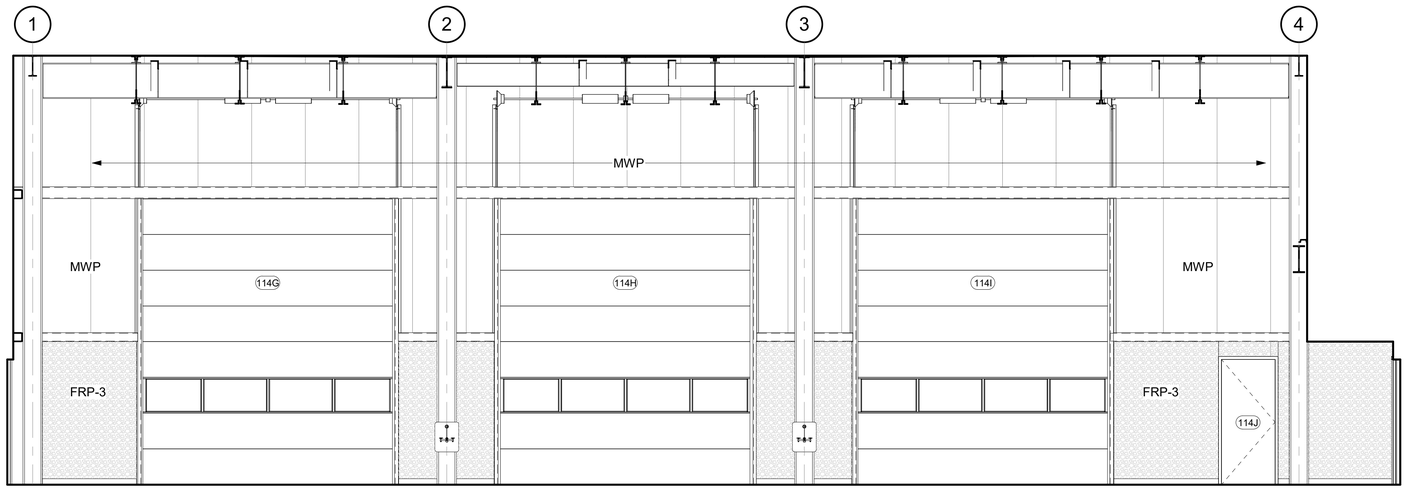

1 APP BAY 114 - NORTH
1/4" = 1'-0"

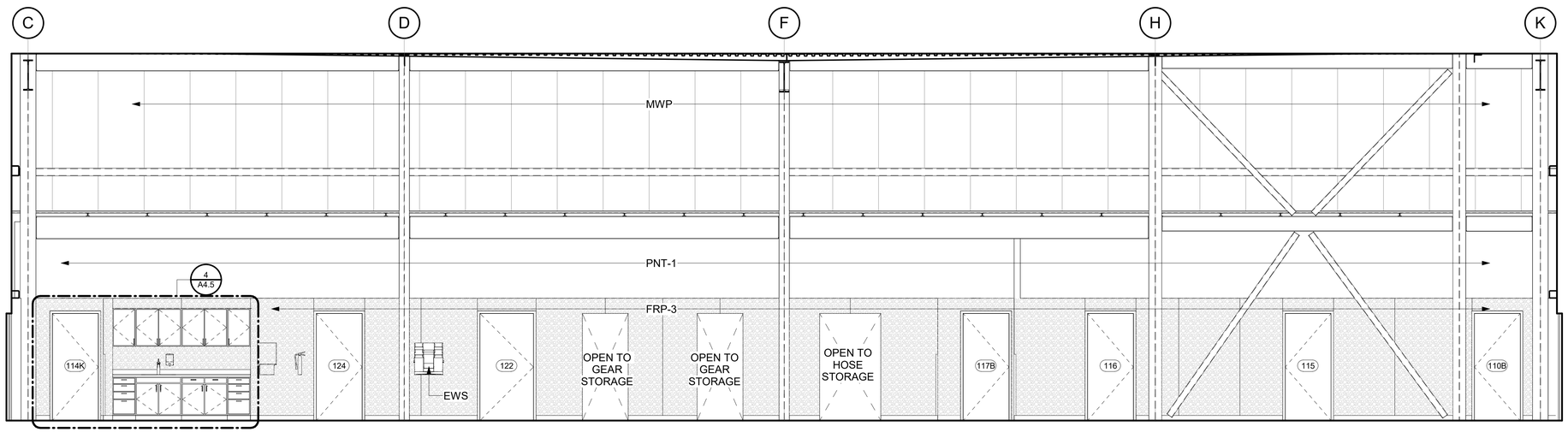

2 APP BAY 114 - EAST
1/4" = 1'-0"

STATE OF ALASKA 49TH
DAVE JAMES DREHER
A-14794
Registered Professional Architect
5/9/18

Burkhart Croft ARCHITECTS LLC
880 N Street Suite 302 | Anchorage Alaska 99501
T: 907.929.9334 | www.burkhart-croft.com

MATANUSKA-SUSITNA BOROUGH
MSB FIRE STATION 6-2
WASILLA, ALASKA

DATE: 5/9/2018
DRAWN: KSA
CHECKED: DJD
PROJECT: 1725
DRAWING TITLE:
INTERIOR ELEVATIONS
REVISIONS:
SHEET NO:
A4.10

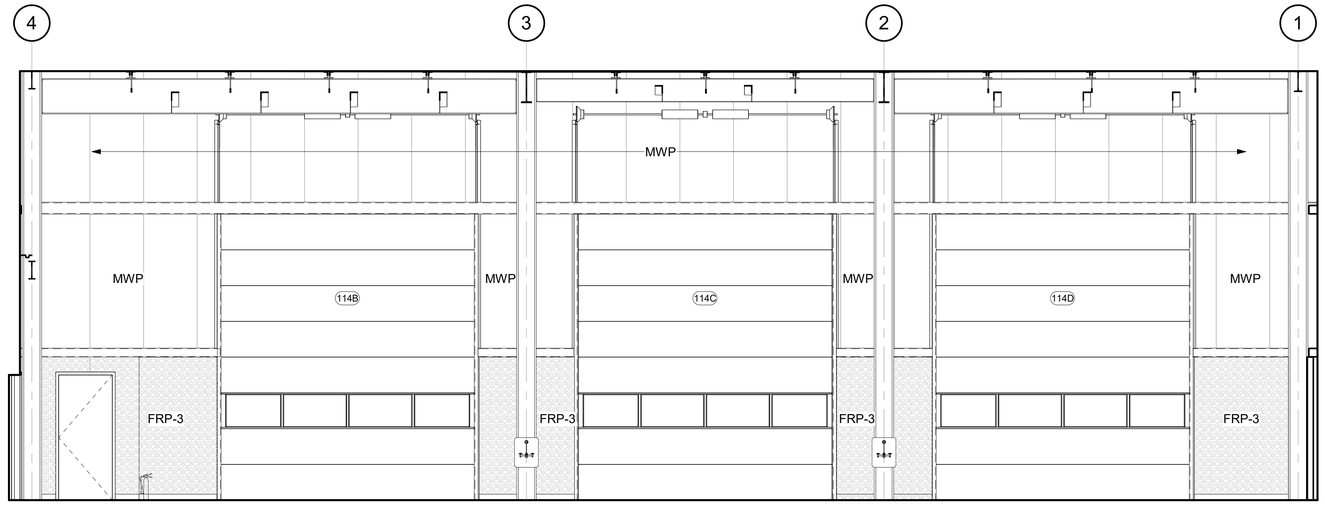

1 APP BAY 114 - SOUTH
1/4" = 1'-0"

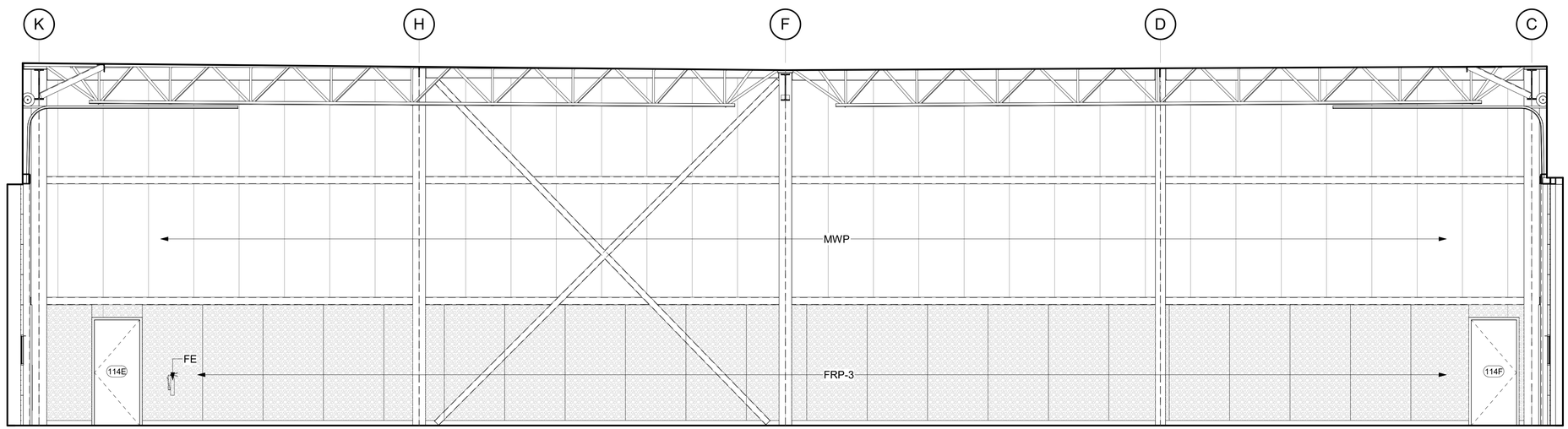

2 APP BAY 114 - WEST
1/4" = 1'-0"

STATE OF ALASKA
49TH
DAVE JAMES DREHER
A-14794
Registered Professional Architect
5/9/18

Burkhart Croft
ARCHITECTS LLC
880 N Street Suite 302 | Anchorage Alaska 99501
T: 907.929.9334 | www.burkhart-croft.com

MATANUSKA-SUSITNA BOROUGH

MSB FIRE STATION 6-2

WASILLA, ALASKA

DATE: 5/9/2018

DRAWN: KSA

CHECKED: DJD

PROJECT: 1725

DRAWING TITLE:
INTERIOR ELEVATIONS

REVISIONS:

SHEET NO:

A4.11

ROOM FINISH SCHEDULE

				WALL FINISH				WAINSCOT		CASEWORK					CEILING		
ROOM NO.	ROOM NAME	FLOOR FINISH	BASE	NORTH	EAST	SOUTH	WEST	MATL	HEIGHT	LOWERS	UPPERS	FULL	COUNTERS	ACCESSORIES	MATL	FINISH	REMARKS
101	VEST.	WO-1,2	MWP-1	STORE FRONT	STORE FRONT	STORE FRONT	MWP-1,2	-	-	-	-	-	-	-	GWB	PNT-1	
102	MUSEUM / LOBBY	POLISHED CONCRETE	RB-2	PNT-1,8	PNT-7/RCP-1	STORE FRONT	PNT-1/RCP-1	-	-	-	-	RCP-1	-	FEC,CG	ACP	ACP-1	
103	RECEPTION	CPT-1	RB-2	PNT-1	PNT-1	PNT-1	RCP-1	-	-	PL-1	PL-1	-	SS-3	-	GWB	PNT-1	
104	SNACK BAR	POLISHED CONCRETE	RB-2	PNT-7	-	PNT-7	PNT-1	-	-	PL-1	PL-1	-	SS-3	SD	GWB	PNT-7	
105	M'S RESTRM	SV-1	SV-1 COVE	FRP-1/PNT-1	FRP-2/PNT-1,4	FRP-1/PNT-1	FRP-1/PNT-1	FRP	4'-0"	-	-	-	SS-3	PTD,SD,MI,TPD,BCS	GWB	PNT-1	
106	W'S RESTRM	SV-1	SV-1 COVE	FRP-1/PNT-1	FRP-1/PNT-1	FRP-1/PNT-1	FRP-2/ PNT-1,4	FRP	4'-0"	-	-	-	SS-3	PTD,SD,MI,TPD,BCS,SNR	GWB	PNT-1	
107	TRNG OFFICE	CPT-1	RB-1	PNT-5	PNT-1	PNT-1	PNT-1	-	-	-	-	-	-	-	ACP	ACP-1	
108	TRNG OFFICE	CPT-1	RB-1	PNT-5	PNT-1	PNT-1	PNT-1	-	-	-	-	-	-	-	ACP	ACP-1	1
109	TRNG OFFICE	CPT-1	RB-1	PNT-5	PNT-1	PNT-1	PNT-1	-	-	-	-	-	-	-	ACP	ACP-1	
110	BATLN CHIEF + CAPTAIN	CPT-1	RB-1	PNT-5	PNT-1	PNT-1	PNT-1	-	-	-	-	-	-	-	ACP	ACP-1	
111	OPEN OFFICE	CPT-3,4	RB-1	PNT-1,5	PNT-1,5	PNT-1	PNT-1	-	-	-	-	-	-	-	ACP	ACP-1	
112	WORK ROOM	CPT-1	RB-1	PNT-1	PNT-1	PNT-1	PNT-1	-	-	PL-2	PL-2	-	PL-4	-	ACP	ACP-1	
113	IT / ELEC.	SDT-1	RB-1	PNT-1	PNT-1	PNT-1	PNT-1	-	-	-	-	-	-	-	ES	-	
114	APPARATUS BAY	EPOXY	RB-1	FRP-3/PNT-1	FRP-3/PNT-1	FRP-3/PNT-1	FRP-3/PNT-1	FRP	8'-0"	PL-4	PL-4	N/A	PL-4	FE,SD,PTD	ES	-	
115	FIRE STRG	SEALED CONCRETE	RB-1	PNT-1	PNT-1	PNT-1	PNT-1	-	-	-	-	-	-	RWS	ES	-	
116	SM TOOL WORK SHOP	SEALED CONCRETE	RB-1	PNT-1	PNT-1	PNT-1	PNT-1	-	-	-	-	-	MDF	-	ACP	ACP-1	
117	HALLWAY	CPT-2,3	RB-1	PNT-1,4	PNT-1	PNT-1	PNT-1	-	-	-	-	-	-	-	ACP	ACP-1	
118	W'S LOCKER	SV-1	SV-1 COVE	FRP-1/PNT-4	FRP-2 / PNT-1,4	FRP-1/PNT-1	FRP-1/PNT-1	FRP	4'-0"	-	-	-	SS-3	ML,RH,PTD,TPD,SNR,SD,MI,B	GWB	PNT-1	
119	M'S LOCKER	SV-1	SV-1 COVE	FRP-1/PNT-1,4	FRP-1/PNT-1	FRP-1/PNT-1	FRP-2/PNT-1,4	FRP	4'-0"	-	-	-	SS-3	ML,RH,PTD,TPD,SD,MI,B	GWB	PNT-1	
120	HOSE STRG	SEALED CONCRETE	RB-1	FRP-3/PNT-1	FRP-3/PNT-1	FRP-3/PNT-1	FRP-3/PNT-1	-	-	-	-	-	-	-	ES	-	
121	GEAR STRG	EPOXY	RB-1	PNT-1	PNT-1	PNT-1	PNT-1	-	-	-	-	-	-	MTGL	ES	-	
122	DECON	SEALED CONCRETE	RB-1	FRP-3/PNT-1	FRP-3/PNT-1	FRP-3/PNT-1	FRP-3/PNT-1	FRP	8'-0"	-	-	-	-		GWB	PNT-1	
123	DECON TOILET	SEALED CONCRETE	RB-1	FRP-3	FRP-3	FRP-3	FRP-3	FRP	8'-0"	-	-	-	-	PTD,TPD,SD,MI,RH	GWB	PNT-1	
124A	JAN.	SEALED CONCRETE	RB-1	PNT-1	FRP-3/PNT-1	FRP-3/PNT-1	PNT-1	FRP	8'-0"	-	-	-	-	RWS,MS,MR	ES	-	
124B	COMP	SEALED CONCRETE	RB-1	PNT-1	PNT-1	PNT-1	PNT-1	-	-	-	-	-	-	-	ES	-	
125	DORM	CPT-5	RB-1	PNT-5	PNT-1	PNT-1	PNT-1	-	-	-	-	PL-5	-	-	ACP	ACP-1	
126	DORM	CPT-5	RB-1	PNT-5	PNT-1	PNT-1	PNT-1	-	-	-	-	PL-5	-	-	ACP	ACP-1	
127	DORM	CPT-5	RB-1	PNT-5	PNT-1	PNT-1	PNT-1	-	-	-	-	PL-5	-	-	ACP	ACP-1	
128	DORM	CPT-5	RB-1	PNT-5	PNT-1	PNT-1	PNT-1	-	-	-	-	PL-5	-	-	ACP	ACP-1	
129	DORM	CPT-5	RB-1	PNT-5	PNT-1	PNT-1	PNT-1	-	-	-	-	PL-5	-	-	ACP	ACP-1	
130	DORM	CPT-5	RB-1	PNT-5	PNT-1	PNT-1	PNT-1	-	-	-	-	PL-5	-	-	ACP	ACP-1	
131	DORM	CPT-5	RB-1	PNT-5	PNT-1	PNT-1	PNT-1	-	-	-	-	PL-5	-	-	ACP	ACP-1	
132	DORM	CPT-5	RB-1	PNT-5	PNT-1	PNT-1	PNT-1	-	-	-	-	PL-5	-	-	ACP	ACP-1	
133	DORM	CPT-5	RB-1	PNT-5	PNT-1	PNT-1	PNT-1	-	-	-	-	PL-5	-	-	ACP	ACP-1	
134	DORM	CPT-5	RB-1	PNT-5	PNT-1	PNT-1	PNT-1	-	-	-	-	PL-5	-	-	ACP	ACP-1	
135	DORM	CPT-5	RB-1	PNT-5	PNT-1	PNT-1	PNT-1	-	-	-	-	PL-5	-	-	ACP	ACP-1	
136	DORM	CPT-5	RB-1	PNT-5	PNT-1	PNT-1	PNT-1	-	-	-	-	PL-5	-	-	ACP	ACP-1	
137A	HALLWAY	CPT-2,3,6	RB-1	PNT-1	PNT-2	PNT-1	PNT-1	-	-	-	-	-	-	FEC	ACP	ACP-1	
137B	HALL WAY	CPT-2,3,6	RB-1	PNT-1	PNT-1	PNT-1	PNT-1	-	-	-	-	-	-	-	ACP	ACP-1	
137C	HALL WAY	CPT-2,3,6	RB-1	PNT-1	PNT-1	PNT-1	PNT-1	-	-	-	-	-	-	FEC	ACP	ACP-1	
138	TOILET	SV-1	SV-1 COVE	FRP-2/PNT-4	FRP-1/PNT-1	FRP-1/PNT-1	FRP-1/PNT-1	FRP	4'-0"	PL-5	-	-	SS-1	PTD,SD,MI,TPD,RH	GWB	PNT-1	
139	TOILET	SV-1	SV-1 COVE	FRP-2/PNT-4	FRP-1/PNT-1	FRP-1/PNT-1	FRP-1/PNT-1	FRP	4'-0"	PL-5	-	-	SS-1	PTD,SD,MI,TPD,RH	GWB	PNT-1	
140	TOILET	SV-1	SV-1 COVE	FRP-2/PNT-4	FRP-1/PNT-1	FRP-1/PNT-1	FRP-1/PNT-1	FRP	4'-0"	PL-5	-	-	SS-1	PTD,SD,MI,TPD,RH	GWB	PNT-1	
141	DAY ROOM	CPT-3,4	RB-1	PNT-1	PNT-1	PNT-3	PNT-1	-	-	PL-3	-	-	PL-4	TVM	ACP	ACP-1	
142A	KITCHEN	LVT-1	RB-1	PNT-1	PNT-1	PNT-5	PNT-1	-	-	PL-3	PL-3	-	SS-1	FE	GWB	PNT-1	
142B	DINING	LVT-1	RB-1	PNT-1	PNT-1	PNT-5	PNT-1	-	-	PL-3	PL-3	-	SS-1	-	ACP	ACP-1	
143	FITNESS	LVT-2,3	RB-1	PNT-1	PNT-1,2	PNT-1	PNT-1	-	-	-	-	-	-	-	ES	-	
144	LNDRY/ JAN	SV-1	RB-1	PNT-1	PNT-1	FRP-3/PNT-1	FRP-3/PNT-1	FRP	8'-0"	-	-	PL-2	PL-4	MS,MR	GWB	PNT-1	
145	STRG	SV-1	RB-1	PNT-1	PNT-1	PNT-1	PNT-1	-	-	-	-	-	-	RWS	GWB	PNT-1	
146	TEACHING LAB	SV-1	SV-1 COVE	FRP-3/PNT-7	PNT-1	FRP-3 / PNT-1,7	FRP-3/PNT-7	FRP	8'-0"	-	-	-	-	FE	ACP	ACP-1	
147	CLASSROOM	CPT-1,3	RB-1	PNT-1	PNT-1	PNT-1	PNT-1	-	-	-	-	-	-	TVM	ACP	ACP-1	
147S	STRG.	CPT-1	RB-1	PNT-1	PNT-1	PNT-1	PNT-1	-	-	-	-	-	-	-	ACP	ACP-1	
148	CLASSROOM	CPT-3,4	RB-1	PNT-1	PNT-1	PNT-1	PNT-1	-	-	-	-	-	-	TVM	ACP	ACP-1	
148S	STRG.	CPT-4	RB-1	PNT-1	PNT-1	PNT-1	PNT-1	-	-	-	-	-	-	-	ACP	ACP-1	
149	CLASSROOM	CPT-1,3	RB-1	PNT-1	PNT-1	PNT-1	PNT-1	-	-	-	-	-	-	TVM	ACP	ACP-1	
149S	STRG.	CPT-1	RB-1	PNT-1	PNT-1	PNT-1	PNT-1	-	-	-	-	-	-	-	ACP	ACP-1	
150	HALLWAY	CPT-2,3	RB-2	PNT-1	PNT-1	PNT-1	PNT-1	-	-	-	-	-	-	FEC,CG	ACP	ACP-1	
151	JAN.	SV-1	SV-1 COVE	PNT-1	FRP-3/PNT-1	FRP-3/PNT-1	PNT-1	FRP	8'-0"	-	-	-	-	MS,MR	ACP	ACP-1	
152	PUMP ACCESS	SEALED CONCRETE	RB-1	PNT-1	PNT-1	PNT-1	PNT-1	-	-	-	-	-	-	-	ES	-	
153	TRNG. LIBRARY	CPT-1	RB-1	PNT-1	PNT-1	PNT-1	PNT-1	-	-	-	-	-	-	MTLS	GWB	PNT-1	
154	VEST.	WO-1	RB-1	PNT-1	PNT-1	PNT-1	PNT-1	-	-	-	-	-	-	-	GWB	PNT-1	
155	STORAGE	EPOXY	RB-1	OPEN TO APPBAY	FRP-3/PNT-1	FRP-3/PNT-1	FRP-3/PNT-1	FRP	8'-0"	-	-	-	-	FE	ES	-	
156	GEAR STRG.	EPOXY	RB-1	PNT-1	PNT-1	PNT-1	PNT-1	-	-	-	-	-	-	MTGL	GWB	-	
157	TOILET	SEALED CONCRETE	RB-1	FRP-3/PNT-1	FRP-3/PNT-1	FRP-3/PNT-1	FRP-3/PNT-1	FRP	4'-0"	-	-	-	-	PTD,SD,MI,TPD	GWB	PNT-1	
158	DECON	SEALED CONCRETE	RB-1	FRP-3	FRP-3	FRP-3	FRP-3	FRP	8'-0"	-	-	-	-	-	GWB	PNT-1	
159	TOILET	SEALED CONCRETE	RB-1	FRP-3	FRP-3	FRP-3	FRP-3	FRP	8'-0"	-	-	-	-	PTD,SD,MI,TPD,RB	GWB	PNT-1	
160	SCBA	SEALED CONCRETE	RB-1	FRP-3/PNT-1	FRP-3/PNT-1	FRP-3/PNT-1	PNT-1	FRP	8'-0"	-	-	-	-	-	ES	-	
161	GENERAL USE BAY	EPOXY	RB-1	FRP-3/PNT-1	FRP-3/PNT-1	FRP-3/PNT-1	FRP-3	FRP	8'-0"	-	-	-	-	FE	ES	-	
162	APP. BAY	EPOXY	RB-1	FRP-3/PNT-1	FRP-3/PNT-1	FRP-3/PNT-1	FRP-3	FRP	8'-0"	-	-	-	-	FE	ES	-	
163	MECH	SEALED CONCRETE	RB-1	PNT-1	PNT-1	PNT-1	PNT-1	-	-	-	-	-	-	FE	ES	-	
164	PUMP ROOM	SEALED CONCRETE	RB-1	-	-	-	-	-	-	-	-	-	-	-	-	-	
202	MEZZANINE	SEALED CONCRETE	RB-1		PNT-1	PNT-1	PNT-1	-	-	-	-	-	-	-	ES	-	2
301	CONTROL ROOM	SEALED CONCRETE	RB-1	PNT-1/WMP	WMP	WMP	PNT-1/WMP	-	-	-	-	-	-	-	ES	-	2
302	STAIR	SEALED CONCRETE	RB-1	-	-	-	-	-	-	-	-	-	-	-	ES	-	2

FINISH SCHEDULE LEGEND NOTES AND REMARKS

GENERAL FINISH NOTES

1. ALL EXPOSED CROSS BRACING, EXPOSED STEEL COLUMNS, AND STEEL FRAMING LOCATED IN FINISHED SPACES SUCH AS ADMINISTRATION AREAS AND CLASSROOMS ARE TO BE PAINTED, TYP.

REMARKS

1. SV AT CASEWORK
2. SEE FINISH LEGEND FOR MISCELLANEOUS METALS

ACCESSORIES

B	BENCH
BCS	BABY CHANGING STATION
CG	CORNER GUARD
FE	FIRE EXTINGUISHER
FEC	FIRE EXTINGUISHER CABINET
GB	GRAB BAR
MB-1	MARKER BOARD
MI	MIRROR
ML	METAL LOCKERS
MR	MOP RACK / SHELF
MS	MOP SINK
MTGL	METAL TURNOUT GEAR LOCKER
MTLS	METAL SHELVES
PTD	PAPER TOWEL DISPENSER
RH	ROBE HOOK
RWS	ROLLING WIRE SHELVING
SD	SOAP DISPENSER
SNR	SANITARY NAPKIN RECEPTACLE
TB	TACK BOARD
TPD	TOILET PAPER DISPENSER
TVM	TV MOUNTING BRACKET

ROOM FINISH ABBREVIATIONS

BRA	BRUSHED ALUMINUM
CBB	CEMENTITIOUS BACKER BOARD
ES	EXPOSED STRUCTURE
FF	FACTORY FINISH
GWB	GYPSUM WALL BOARD
MNFR	MANUFACTURER
RC	RESIN COUNTERTOP
SS	SOLID SURFACE COUNTERTOP
TBS	TO BE SELECTED
WD	HARDWOOD

STATE OF ALASKA 49TH DAVE JAMES DREHER A-14794 Registered Professional Architect 5/9/18

Burkhart Croft ARCHITECTS LLC
880 N Street Suite 302 | Anchorage Alaska 99501
T: 907.929.9334 | www.burkhart-croft.com

MATANUSKA-SUSITNA BOROUGH

MSB FIRE STATION 6-2

WASILLA, ALASKA

DATE: 5/9/2018

DRAWN: JKJ/BDN

CHECKED: JBC

PROJECT: 1725

DRAWING TITLE: ROOM FINISH SCHEDULE

REVISIONS:

SHEET NO:

A5.1

FINISH MATERIAL LEGEND

ABBREV.	MATERIAL TYPE	BASIS OF DESIGN			SIZE	COMMENTS
		MANUFACTURER	STYLE NAME/STYLE NUMBER	COLOR		
WALL BASE						
RB-1	RUBBER BASE	JOHNSONITE	TRADITIONAL	40 BLACK	4"	
RB-2	RUBBER BASE	JOHNSONITE	WALL ART	PFL ARMOR	4"	LOBBY/MUSEUM
FLOORING						
CPT-1	CARPET TILE	SHAW	REALM TILE 5T078	78500 SPACE	24" X 24"	INSTALLATION METHOD - QUARTER TURN
CPT-2	CARPET TILE	SHAW	REVERSE TILE 5T069	69500 SPACE	24" X 24"	INSTALLATION METHOD - QUARTER TURN
CPT-3	CARPET TILE	SHAW	COLOR FRAME TILE 5T081	81370 ENCHANTED	24" X 24"	INSTALLATION METHOD - QUARTER TURN
CPT-4	CARPET TILE	SHAW	SHAPE TILE 5T070	69500 SPACE	24" X 24"	INSTALLATION METHOD - QUARTER TURN
CPT-5	CARPET BROADLOOM	SHAW	TRANSFER CLASSICBAC 5A203	03500 SPACE		INSTALLATION METHOD - QUARTER TURN
CPT-6	CARPET TILE	SHAW	SCAPE TILE 5T080	78855 GLIMPSE		INSTALLATION METHOD - QUARTER TURN
LVT-1	LUXURY VINYL TILE	SHAW	QUIET COVER 0186V	00770 RECLAIMED	7" X 48"	INSTALLATION METHOD - STAGGER
LVT-2	LUXURY VINYL TILE	SHAW	CRETE 0203V	03510 SMOKE	18" X 18"	
LVT-3	LUXURY VINYL TILE	SHAW	UNVEIL 0601V	01855 RUST	9" X 36"	INSTALLATION METHOD - STAGGER
SDT-1	STATIC DISSIPATIVE TILE	ARMSTRONG	ESD STATIC CONTROL FLOORING	51951 ARMOR GRAY	12" X 12"	
SV-1	SHEET VINYL	SHAW	TATAMI 0796V	PAGODA		
WO-1	WALK-OFF CARPET	SHAW	PORTAL 5T035	34349 LAVA	24" X 24"	INSTALLATION METHOD - QUARTER TURN
WO-2	WALK-OFF CARPET	SHAW	PATH 5T034	34851 DARK RED	24" X 24"	INSTALLATION METHOD - QUARTER TURN
PAINT						
PNT-1	PAINT	SHERWIN WILLIAMS	SATIN	SW7009 PEARLY WHITE		FIELD WALLS/CEILINGS
PNT-2	PAINT	SHERWIN WILLIAMS	SATIN	SW6608 RAVE RED		ACCENT
PNT-3	PAINT	SHERWIN WILLIAMS	SATIN	SW6711 PARAKEET		ACCENT
PNT-4	PAINT	SHERWIN WILLIAMS	SATIN	SW6629 JALAPENO		ACCENT
PNT-5	PAINT	SHERWIN WILLIAMS	SATIN	SW7044 AMAZING GRAY		ACCENT
CASEWORK & MILLWORK						
PL-1	PLASTIC LAMINATE	FORMICA		XXX		CASEWORK
PL-2	PLASTIC LAMINATE	WILSONART		4795-60 WINDSWEPT PEWTER		CASEWORK
PL-3	PLASTIC LAMINATE	LAB DESIGNS		WA405CR FOG MAPLE		CASEWORK
PL-4	PLASTIC LAMINATE	FORMICA		9477-58 MARFILL CREAM		COUNTER TOP
PL-5	PLASTIC LAMINATE	WILSONART		7925-38 MONTICELLO MAPLE		CASEWORK
SS-1	SOLID SURFACE	ZODIAQ		VENETIAN CREAM		COUNTER TOP
SS-2	SOLID SURFACE	ZODIAQ		OCTAVIO		WINDOW SILLS
SS-3	SOLID SURFACE	ZODIAQ		CONCRETE CARRARA		COUNTER TOP
WALL PROTECTION						
CG-1	CORNER GUARD	INPRO	STANDARD TYPE 430	16 GAUGE STAINLESS STEEL	1 1/2" X 1 1/2" X 4'	
FRP-1	FIBERGLASS-REINFORCED PLASTIC PANEL	INPRO	RIGID WALL	5E025 BRUSHED SILVER	4' X 8'	
FRP-2	FIBERGLASS-REINFORCED PLASTIC PANEL	INPRO	RIGID WALL	5E026 BRUSHED NICKEL	4' X 8'	
FRP-3	CRANE COMPOSITES	GLASBORD	SMOOTH	WHITE 85	4' X 8'	
CEILINGS						
ACP-1	ACOUSTICAL CEILING PANEL	ARMSTRONG	DUNE	WHITE	2' X 4'	
MISCELLANEOUS						
HR-1	METAL HANDRAIL	SHERWIN WILLIAMS	SATIN	SW7044 AMAZING GRAY		LOBBY/MUSEUM
HR-2	METAL HANDRAIL	SHERWIN WILLIAMS	SATIN	SW6608 RAVE RED		METAL STAIRS AND HANDRAILS
ML-1	METAL ATHLETIC LOCKERS	REPUBLIC STORAGE PRODUCTS	HEAVY DUTY VENTILATED / DOUBLE TIER	XXXX	12" X 12" X 60"	LOCKER ROOMS
RB-1	ROBE HOOK	XXXX	XXXX	SSTL		LOCKER ROOMS
RCP-1	RESIN COMPOSITE PANEL	STONEWOOD		WA7054 WILD CHERRY		LOBBY/MUSEUM
TP-1	TOILET PARTITIONS	ASI ACCURATE PARTITIONS	XXXX	XXXX		

STATE OF ALASKA 49TH DAVE JAMES DREHER A-14794 Registered Professional Architect
5/9/18

Burkhart Croft ARCHITECTS LLC
880 N Street Suite 302 | Anchorage Alaska 99501
T: 907.929.9334 | www.burkhart-croft.com

MATANUSKA-SUSITNA BOROUGH

MSB FIRE STATION 6-2

WASILLA, ALASKA

DATE: 5/9/2018

DRAWN: BDN

CHECKED: JBC

PROJECT: 1725

DRAWING TITLE:
ROOM FINISH LEGEND

REVISIONS:

SHEET NO:

A5.2

Door Schedule

DOOR NO.	WIDTH	HEIGHT	THICKNESS	DOOR TYPE	DOOR MATL	DOOR FINISH	FRAME FINISH	FRAME MATL	COMMENTS
101A	6' - 0"	7' - 0"	0' - 1 3/4"	SF-2	ALUM	FF	FF	ALUM	SEE STOREFRONT
101B	6' - 0"	7' - 0"	0' - 1 3/4"	SF-2	ALUM	FF	FF	ALUM	SEE STOREFRONT
103	3' - 0"	7' - 0"	0' - 1 3/4"	A	WD	CLR	FF	HM	
105	3' - 0"	7' - 0"	0' - 1 3/4"	A	WD	CLR	FF	ALUM	
106	3' - 0"	7' - 0"	0' - 1 3/4"	A	WD	CLR	FF	ALUM	
107	3' - 0"	7' - 0"	0' - 1 3/4"	A	WD	CLR	FF	HM	
108	3' - 0"	7' - 0"	0' - 1 3/4"	A	WD	CLR	FF	HM	
109	3' - 0"	7' - 0"	0' - 1 3/4"	A	WD	CLR	FF	HM	
110A	3' - 0"	7' - 0"	0' - 1 3/4"	A	WD	CLR	FF	HM	
110B	3' - 0"	7' - 0"	0' - 1 3/4"	B	HM	FF	FF	HM	
111A	3' - 0"	7' - 0"	0' - 1 3/4"	B	WD	CLR	FF	ALUM	
111B	3' - 0"	7' - 0"	0' - 1 3/4"	B	WD	CLR	FF	HM	
112	3' - 0"	7' - 0"	0' - 1 3/4"	A	WD	CLR	FF	HM	
113	3' - 0"	7' - 0"	0' - 1 3/4"	A	HM	FF	FF	HM	
114A	3' - 0"	7' - 0"	0' - 1 3/4"	B	IHM	PNT	PNT	TBHM	
114B	14' - 0"	16' - 0"	0' - 2"	F	FF	FF			
114C	14' - 0"	16' - 0"	0' - 2"	F	FF	FF			
114D	14' - 0"	16' - 0"	0' - 2"	F	FF	FF			
114E	3' - 0"	7' - 0"	0' - 1 3/4"	B	IHM	PNT	PNT	TBHM	
114F	3' - 0"	7' - 0"	0' - 1 3/4"	B	IHM	PNT	PNT	TBHM	
114G	14' - 0"	16' - 0"	0' - 2"	F	FF	FF			
114H	14' - 0"	16' - 0"	0' - 2"	F	FF	FF			
114I	14' - 0"	16' - 0"	0' - 2"	F	FF	FF			
114J	3' - 0"	7' - 0"	0' - 1 3/4"	B	IHM	PNT	PNT	TBHM	
114K	3' - 0"	7' - 0"	0' - 1 3/4"	B	HM	FF	FF	HM	
115	3' - 0"	7' - 0"	0' - 1 3/4"	A	HM	FF	FF	HM	
116	3' - 0"	7' - 0"	0' - 1 3/4"	A	HM	FF	FF	HM	
117A	3' - 0"	7' - 0"	0' - 1 3/4"	B	WD	CLR	FF	ALUM	
117B	3' - 0"	7' - 0"	0' - 1 3/4"	B	HM	FF	FF	HM	
118A	3' - 0"	7' - 0"	0' - 1 3/4"	A	HM	FF	FF	HM	
118B	3' - 0"	7' - 0"	0' - 1 3/4"	A	HM	FF	FF	HM	
119A	3' - 0"	7' - 0"	0' - 1 3/4"	A	HM	FF	FF	HM	
119B	3' - 0"	7' - 0"	0' - 1 3/4"	A	HM	FF	FF	HM	
122	3' - 6"	7' - 0"	0' - 1 3/4"	A	HM	FF	FF	HM	
123	3' - 0"	7' - 0"	0' - 1 3/4"	A	HM	FF	FF	HM	
124	3' - 0"	7' - 0"	0' - 1 3/4"	A	HM	FF	FF	HM	
125	3' - 0"	7' - 0"	0' - 1 3/4"	A	WD	CLR	FF	HM	
126	3' - 0"	7' - 0"	0' - 1 3/4"	A	WD	CLR	FF	HM	
127	3' - 0"	7' - 0"	0' - 1 3/4"	A	WD	CLR	FF	HM	
128	3' - 0"	7' - 0"	0' - 1 3/4"	A	WD	CLR	FF	HM	
129	3' - 0"	7' - 0"	0' - 1 3/4"	A	WD	CLR	FF	HM	
130	3' - 0"	7' - 0"	0' - 1 3/4"	A	WD	CLR	FF	HM	
131	3' - 0"	7' - 0"	0' - 1 3/4"	A	WD	CLR	FF	HM	
132	3' - 0"	7' - 0"	0' - 1 3/4"	A	WD	CLR	FF	HM	
133	3' - 0"	7' - 0"	0' - 1 3/4"	A	WD	CLR	FF	HM	
134	3' - 0"	7' - 0"	0' - 1 3/4"	A	WD	CLR	FF	HM	
135	3' - 0"	7' - 0"	0' - 1 3/4"	A	WD	CLR	FF	HM	
136	3' - 0"	7' - 0"	0' - 1 3/4"	A	WD	CLR	FF	HM	
137A	3' - 0"	7' - 0"	0' - 1 3/4"	A	WD	CLR	FF	HM	
137B	3' - 0"	7' - 0"	0' - 1 3/4"	B	IHM	PNT	PNT	TBHM	
137C	3' - 0"	7' - 0"	0' - 1 3/4"	B	IHM	PNT	PNT	TBHM	
138	3' - 0"	7' - 0"	0' - 1 3/4"	A	WD	CLR	FF	HM	
139	3' - 0"	7' - 0"	0' - 1 3/4"	A	WD	CLR	FF	HM	
140	3' - 0"	7' - 0"	0' - 1 3/4"	A	WD	CLR	FF	HM	
141A	3' - 0"	7' - 0"	0' - 1 3/4"	A	WD	CLR	FF	HM	
141B	3' - 0"	7' - 0"	0' - 1 3/4"	A	WD	CLR	FF	HM	
143	4' - 0"	7' - 0"	0' - 1 3/4"	A	WD	CLR	FF	HM	
144	3' - 0"	7' - 0"	0' - 1 3/4"	A	WD	CLR	FF	HM	
145	3' - 0"	7' - 0"	0' - 1 3/4"	A	WD	CLR	FF	HM	
146A	6' - 0"	7' - 0"	0' - 1 3/4"	B	HM	FF	FF	HM	
146B	3' - 0"	7' - 0"	0' - 1 3/4"	B	WD	CLR	FF	HM	
147A	3' - 0"	7' - 0"	0' - 1 3/4"	B	WD	CLR	FF	ALUM	
147B	5' - 0"	7' - 0"	0' - 1 3/4"	E	WD	CLR	FF	MET	

Door Schedule

DOOR NO.	WIDTH	HEIGHT	THICKNESS	DOOR TYPE	DOOR MATL	DOOR FINISH	FRAME FINISH	FRAME MATL	COMMENTS
148A	3' - 0"	7' - 0"	0' - 1 3/4"	B	WD	CLR	FF	HM	
148B	3' - 0"	7' - 0"	0' - 1 3/4"	B	WD	CLR	FF	HM	
148C	5' - 0"	7' - 0"	0' - 1 3/4"	E	WD	CLR	FF	MET	
148D	5' - 0"	7' - 0"	0' - 1 3/4"	E	WD	CLR	FF	HM	
149A	3' - 0"	7' - 0"	0' - 1 3/4"	B	WD	CLR	FF	HM	
149B	3' - 0"	7' - 0"	0' - 1 3/4"	B	WD	CLR	FF	HM	
149C	5' - 0"	7' - 0"	0' - 1 3/4"	E	WD	CLR	FF	MET	
149D	5' - 0"	7' - 0"	0' - 1 3/4"	E	WD	CLR	FF	MET	
150A	6' - 0"	7' - 0"	0' - 1 3/4"	C	WD	CLR	FF	HM	
151	3' - 0"	7' - 0"	0' - 1 3/4"	A	HM	FF	FF	HM	
152	3' - 0"	7' - 0"	0' - 1 3/4"	A	HM	FF	FF	HM	
153	3' - 0"	7' - 0"	0' - 1 3/4"	A	HM	FF	FF		
154A	6' - 0"	7' - 0"	0' - 1 3/4"	C	IHM	PNT	PNT	TBHM	
154B	6' - 0"	7' - 0"	0' - 1 3/4"	C	IHM	PNT	PNT	TBHM	
155	6' - 0"	7' - 0"	0' - 1 3/4"	D	HM	FF	FF	HM	
156	6' - 0"	7' - 0"	0' - 1 3/4"	D	HM	FF	FF	HM	
157	3' - 0"	7' - 0"	0' - 1 3/4"	A	HM	FF	FF	HM	
158	3' - 0"	7' - 0"	0' - 1 3/4"	A	HM	FF	FF	HM	
159	3' - 0"	7' - 0"	0' - 1 3/4"	A	HM	FF	FF	HM	
161A	6' - 0"	7' - 0"	0' - 1 3/4"	C	IHM	PNT	PAINT	TBHM	
161B	3' - 0"	7' - 0"	0' - 1 3/4"	A	HM	FF	FF	HM	
162A	3' - 0"	7' - 0"	0' - 1 3/4"	B	IHM	PNT	PNT	TBHM	
162B	14' - 0"	16' - 0"	0' - 2"	F	FF	FF			
162C	14' - 0"	16' - 0"	0' - 2"	F	FF	FF			
163	6' - 0"	7' - 0"	0' - 1 3/4"	D	HM	FF	FF	HM	
202	3' - 0"	6' - 0"	0' - 1 3/4"	A	IHM	PNT	PNT	TBHM	
301A	3' - 0"	7' - 0"	0' - 1 3/4"	A	HM	FF	FF	HM	
301B	3' - 0"	7' - 0"	0' - 1 3/4"	A	IHM	FF	FF	TBHM	

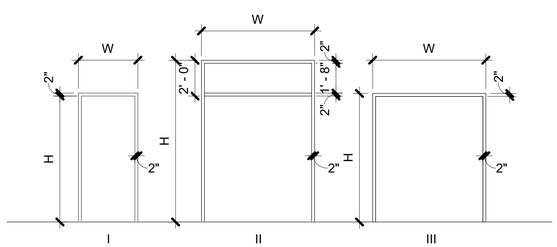

FRAME TYPES
1/4" = 1'-0"

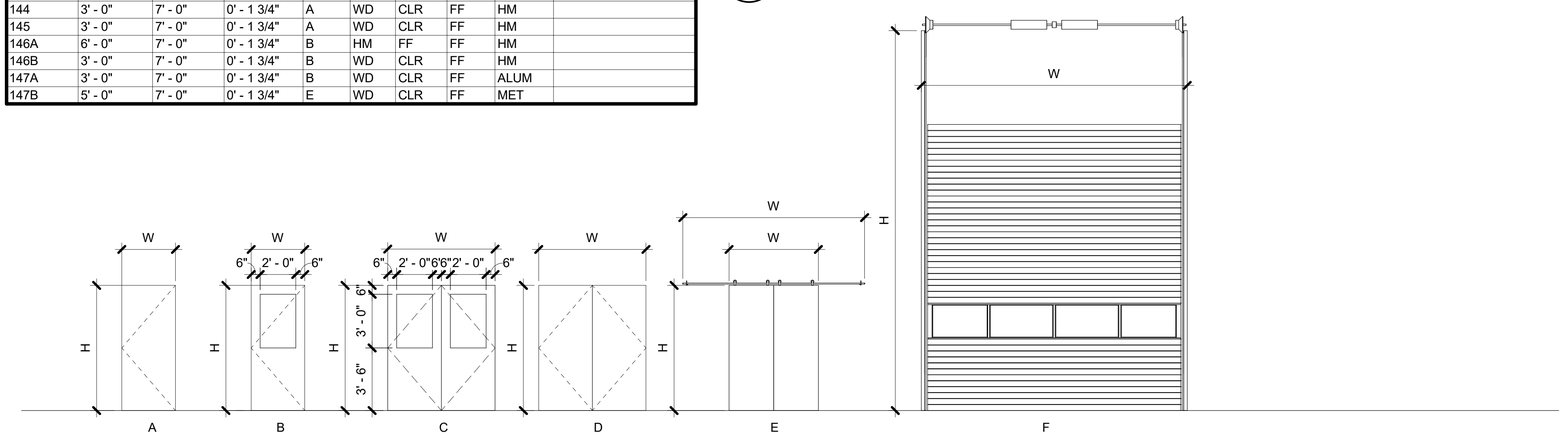

DOOR TYPES
1/4" = 1'-0"

ABBREVIATIONS

ALUM	ALUMINUM
CLR	CLEAR
FF	FACTORY FINISH
HM	HOLLOW METAL
IHM	INSULATED HOLLOW
IM	INSULATED METAL
MET	METAL
PNT	PAINTED FINISH
TBHM	THERMALLY BROKEN HOLLOW METAL
WD	WOOD

STATE OF ALASKA 49TH
DAVE JAMES DREHER
A-14794
Registered Professional Architect
5/9/18

Burkhart Croft
ARCHITECTS LLC
880 N Street Suite 302 | Anchorage Alaska 99501
T: 907.929.9334 | www.burkhart-croft.com

MATANUSKA-SUSITNA BOROUGH

MSB FIRE STATION 6-2

WASILLA, ALASKA

DATE: 5/9/2018
DRAWN: BDN
CHECKED: JBC
PROJECT: 1725
DRAWING TITLE: DOOR SCHEDULE
REVISIONS:
SHEET NO:

A5.3

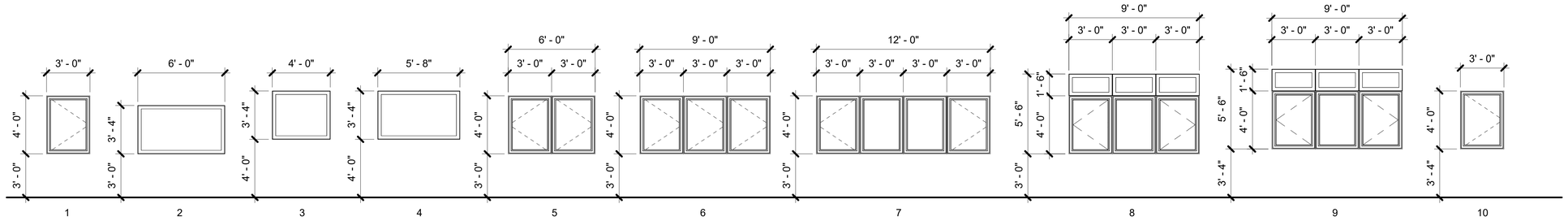

WINDOW TYPES

1/4" = 1'-0"

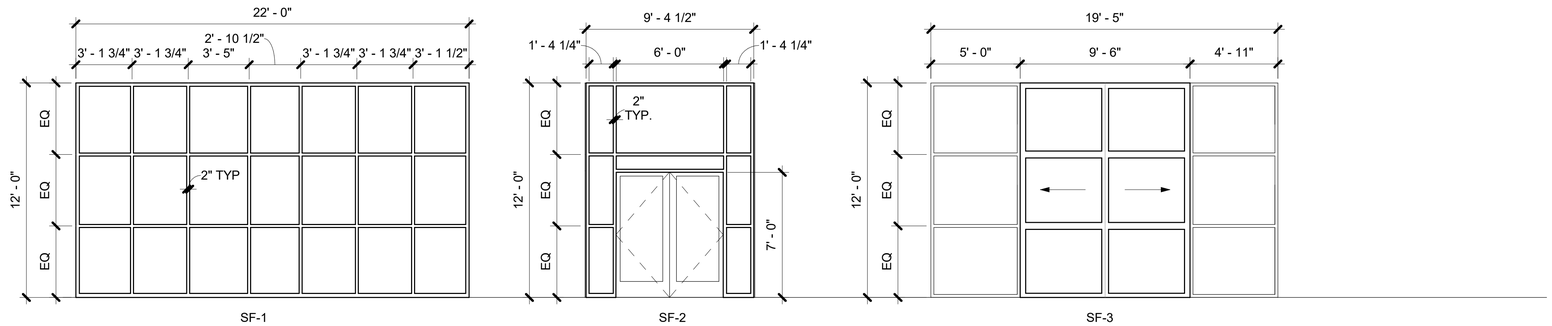

STOREFRONT TYPES

1/4" = 1'-0"

STATE OF ALASKA 49TH DAVE JAMES DREHER A-14794 Registered Professional Architect 5/9/18

Burkhart Croft ARCHITECTS LLC
880 N Street Suite 302 | Anchorage Alaska 99501
T: 907.929.9334 | www.burkhart-croft.com

MATANUSKA-SUSITNA BOROUGH

MSB FIRE STATION 6-2

WASILLA, ALASKA

DATE: 5/9/2018

DRAWN: BH/BDN

CHECKED: DJD

PROJECT: 1725

DRAWING TITLE:
WINDOW AND STOREFRONT TYPES

REVISIONS:

SHEET NO:

A5.4

FLOOR FINISH LEGEND

SEALED CONCRETE (S-CONC)	LVT-1
POLISHED CONCRETE (P-CONC)	LVT-2
CPT-1	LVT-3
CPT-2	SDT-1
CPT-3	SV-1
CPT-4	WO-1
CPT-5	WO-2
CPT-6	

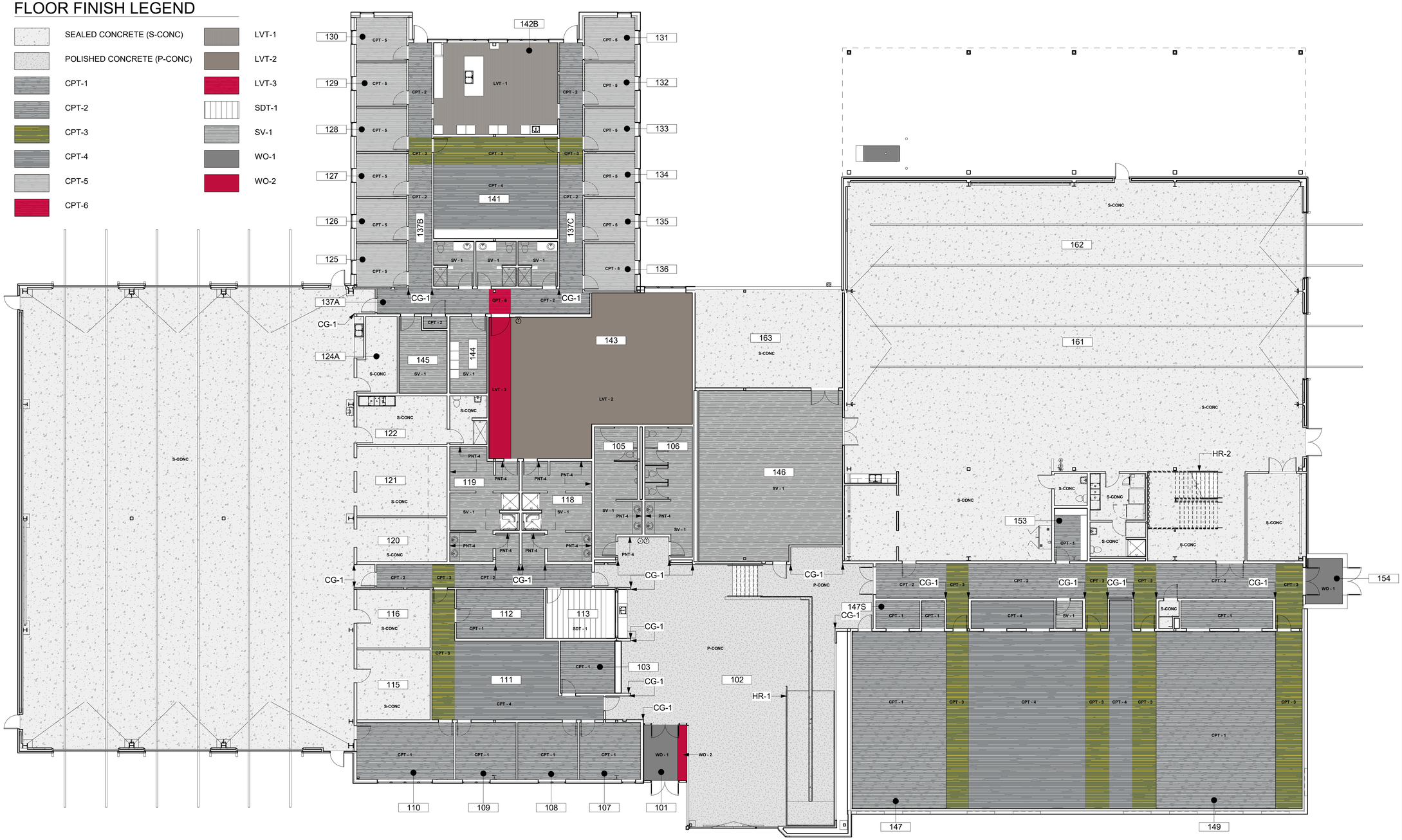

1 FLOOR FINISH PLAN
1" = 12'-0"

STATE OF ALASKA 49TH DAVE JAMES DREHER A-14794 Registered Professional Architect 5/9/18

Burkhart Croft ARCHITECTS LLC
880 N Street Suite 302 | Anchorage Alaska 99501
T: 907.929.9334 | www.burkhart-croft.com

MATANUSKA-SUSITNA BOROUGH

MSB FIRE STATION 6-2

WASILLA, ALASKA

DATE: 5/9/2018

DRAWN: KSA

CHECKED:

PROJECT: 1725

DRAWING TITLE: COLORED FLOOR FINISH PLAN

REVISIONS:

SHEET NO: A5.5

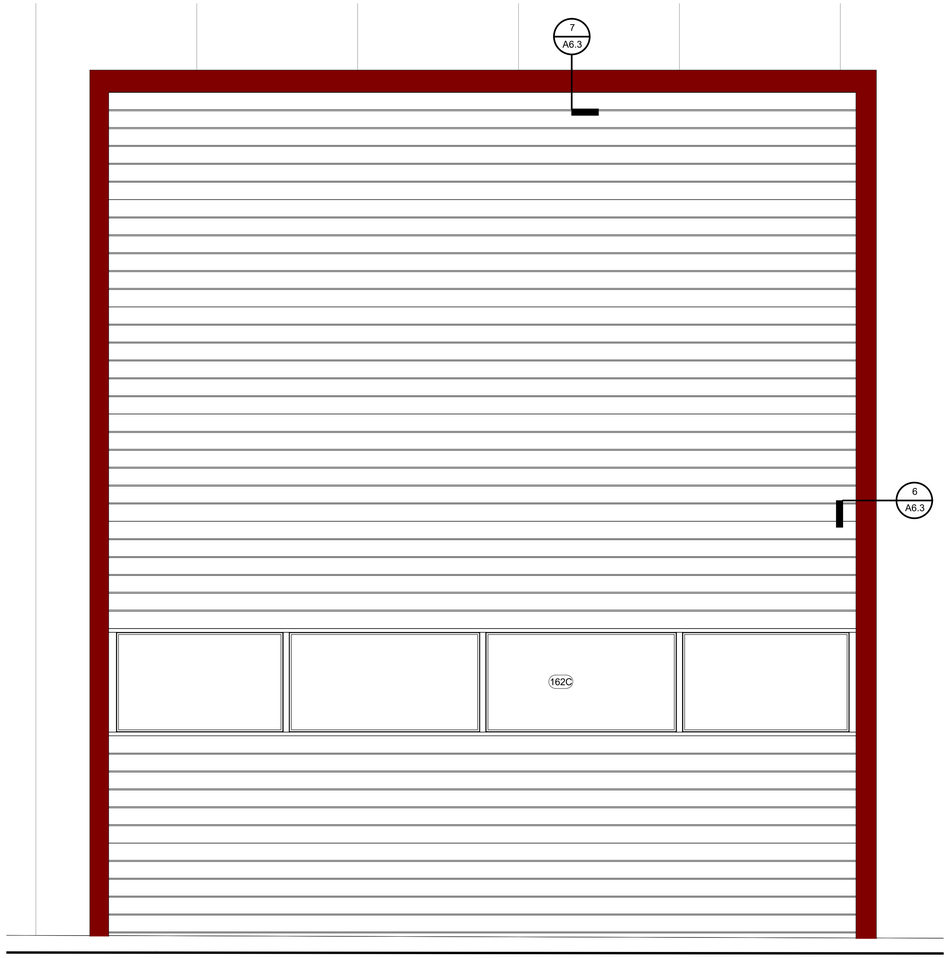

7 TYPICAL OHD @ IMWP
3/4" = 1'-0"

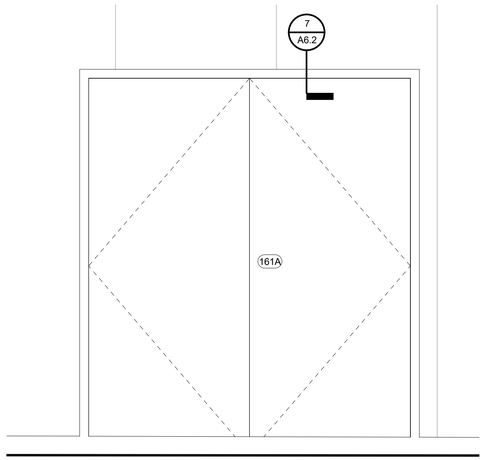

6 TYPICAL DOOR @ IMWP
3/4" = 1'-0"

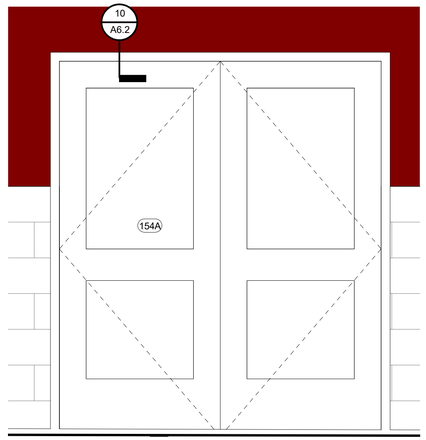

5 TYPICAL DOOR @ CMU
3/4" = 1'-0"

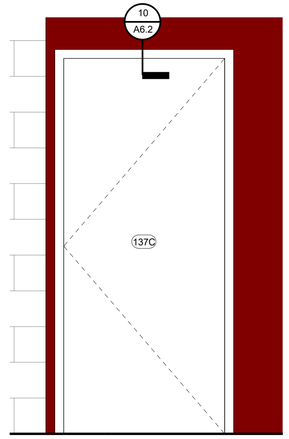

8 TYPICAL DOOR @ EFIS
3/4" = 1'-0"

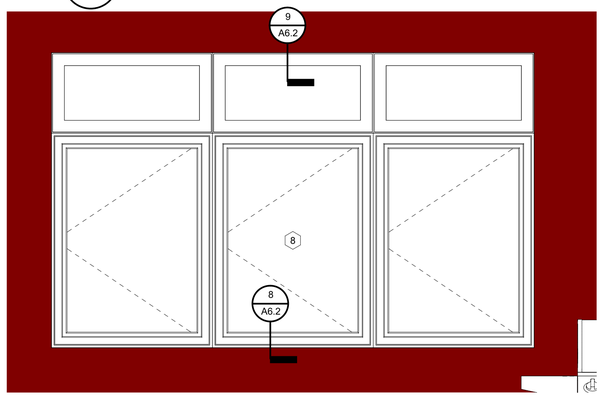

4 TYPICAL WINDOW @ EFIS
3/4" = 1'-0"

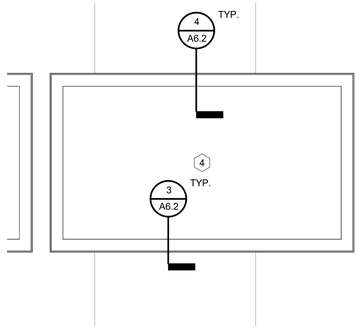

3 TYPICAL WINDOW @ IMWP
3/4" = 1'-0"

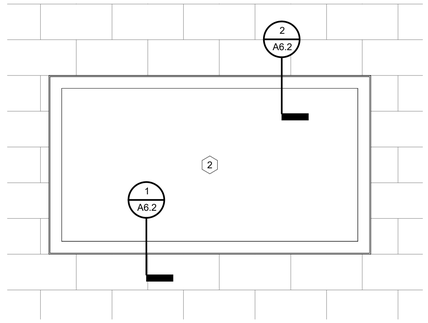

2 TYPICAL WINDOW @ CMU
3/4" = 1'-0"

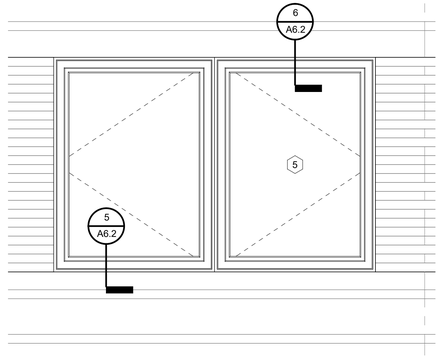

1 TYPICAL WINDOW @ MWP
3/4" = 1'-0"

5

STATE OF ALASKA
49TH
DAVE JAMES DREHER
A-14794
Registered Professional Architect
5/9/18

Burkhart Croft
ARCHITECTS LLC
880 N Street Suite 302 | Anchorage Alaska 99501
T: 907.929.9334 | www.burkhart-croft.com

MATANUSKA-SUSITNA BOROUGH
MSB FIRE STATION 6-2
WASILLA, ALASKA

DATE: 5/9/2018
DRAWN: TOS
CHECKED: DJD
PROJECT: 1725
DRAWING TITLE:
TYPICAL ELEVATION DETAIL CALLOUTS

REVISIONS:

SHEET NO:
A6.1

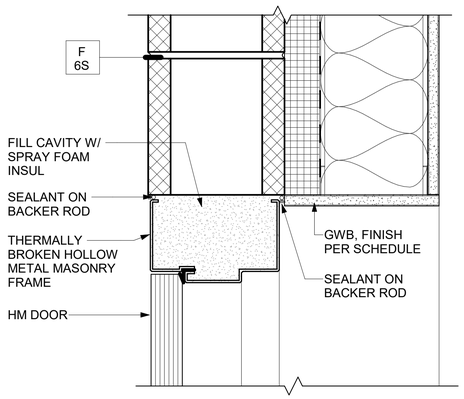

13 CMU DOOR HEAD
3" = 1'-0"

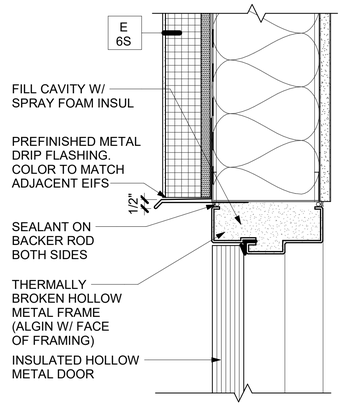

10 EIFS DOOR HEAD
3" = 1'-0"

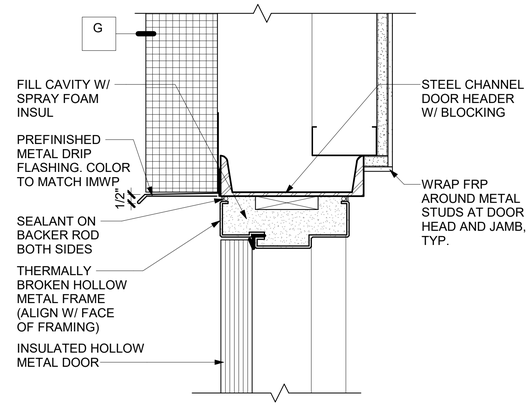

7 IMWP DOOR HEAD
3" = 1'-0"

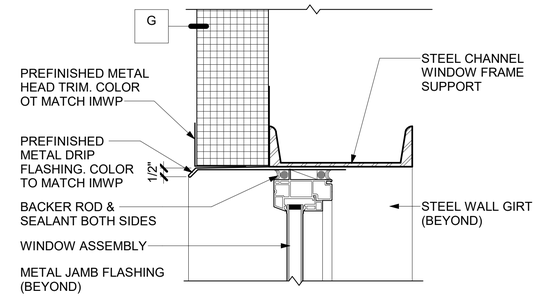

4 IMWP WINDOW HEAD
3" = 1'-0"

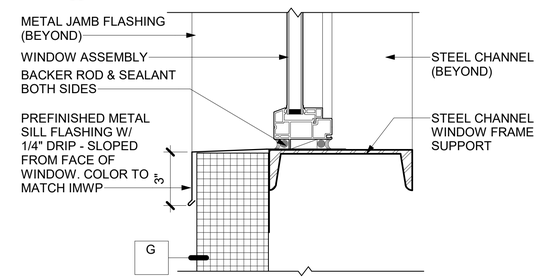

3 IMWP WINDOW SILL
3" = 1'-0"

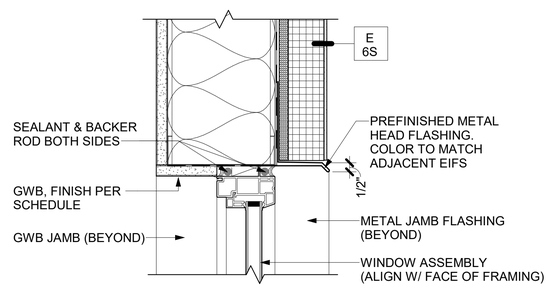

9 EIFS WINDOW HEAD
3" = 1'-0"

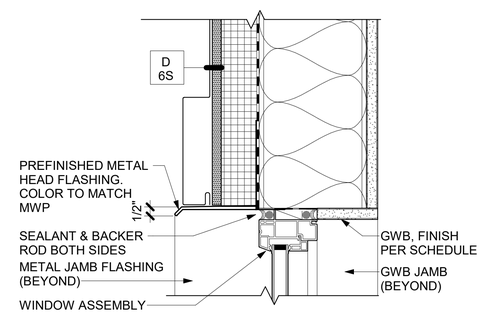

6 MWP WINDOW HEAD
3" = 1'-0"

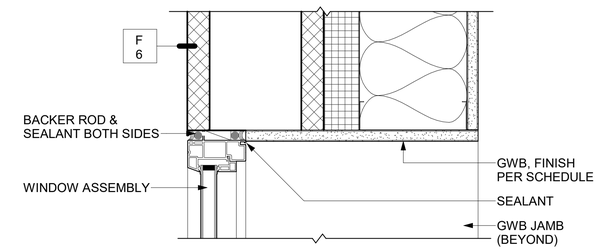

2 CMU WINDOW HEAD
3" = 1'-0"

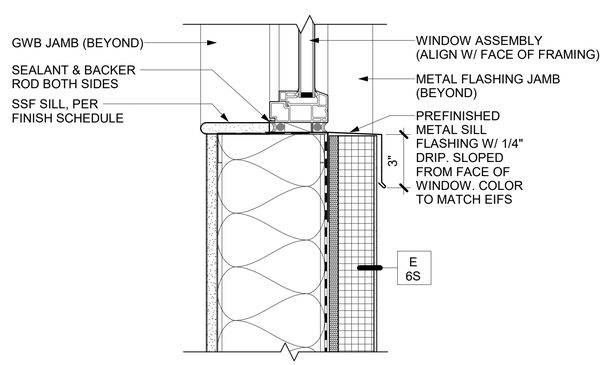

8 EIFS WINDOW SILL DETAIL
3" = 1'-0"

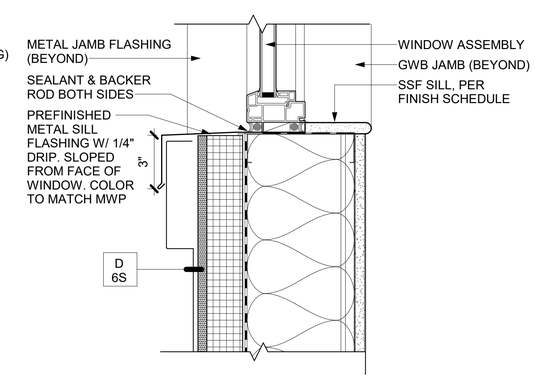

5 MWP WINDOW SILL
3" = 1'-0"

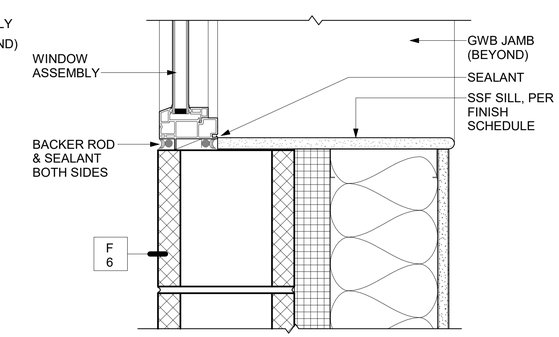

1 CMU WINDOW SILL
3" = 1'-0"

STATE OF ALASKA 49TH DAVE JAMES DREHER A-14794 Registered Professional Architect
5/9/18

Burkhart Croft ARCHITECTS LLC
880 N Street Suite 302 | Anchorage Alaska 99501
T: 907.929.9334 | www.burkhart-croft.com

MATANUSKA-SUSITNA BOROUGH

MSB FIRE STATION 6-2

WASILLA, ALASKA

DATE: 5/9/2018
DRAWN: TOS
CHECKED: DJD
PROJECT: 1725
DRAWING TITLE:
EXTERIOR DETAILS

REVISIONS:

SHEET NO:
A6.2

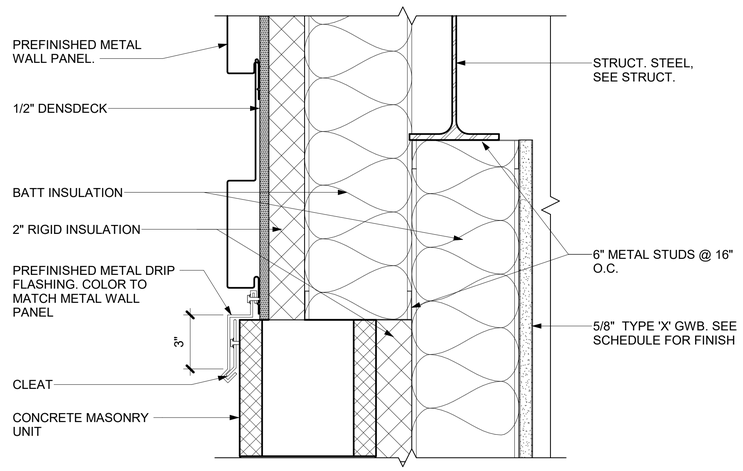

4 MWP/CMU TRANSITION DETAIL
3" = 1'-0"

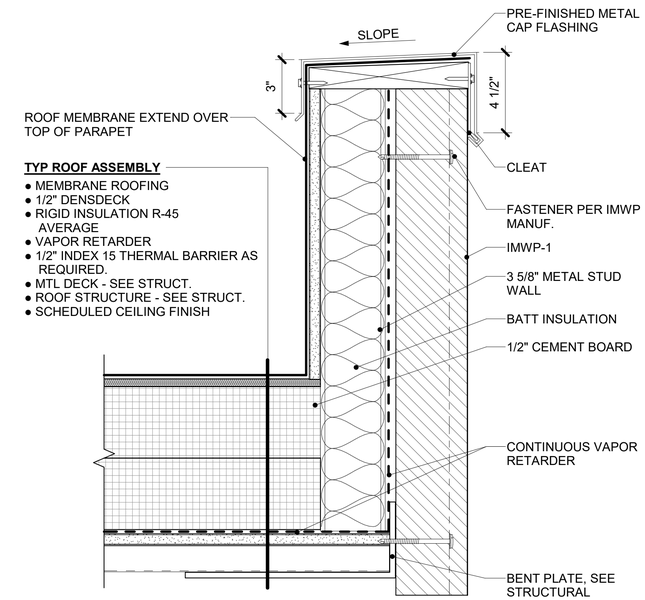

2 IMWP PARAPET DETAIL
3" = 1'-0"

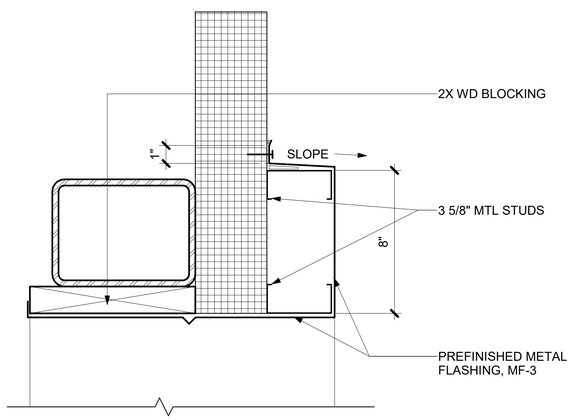

7 OHD HEAD FLASHING DETAIL - TYP.
3" = 1'-0"

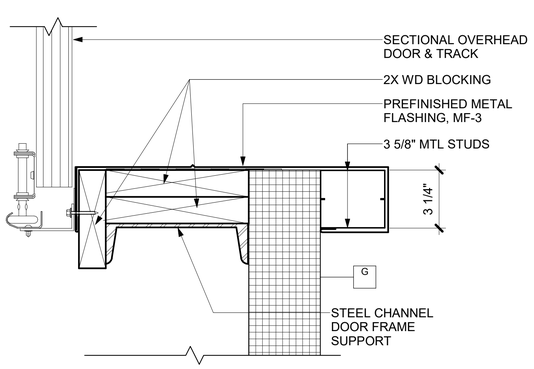

6 OHD JAMB FLASHING DETAIL - TYP.
3" = 1'-0"

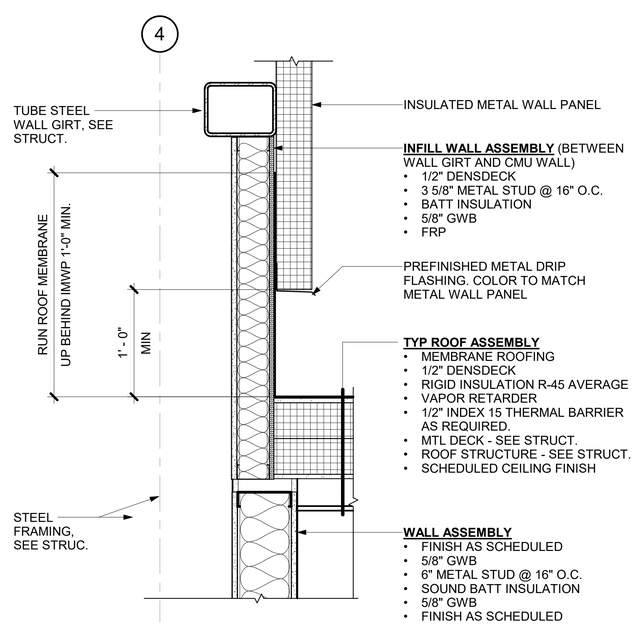

3 LOWER WALL TRANSITION
1 1/2" = 1'-0"

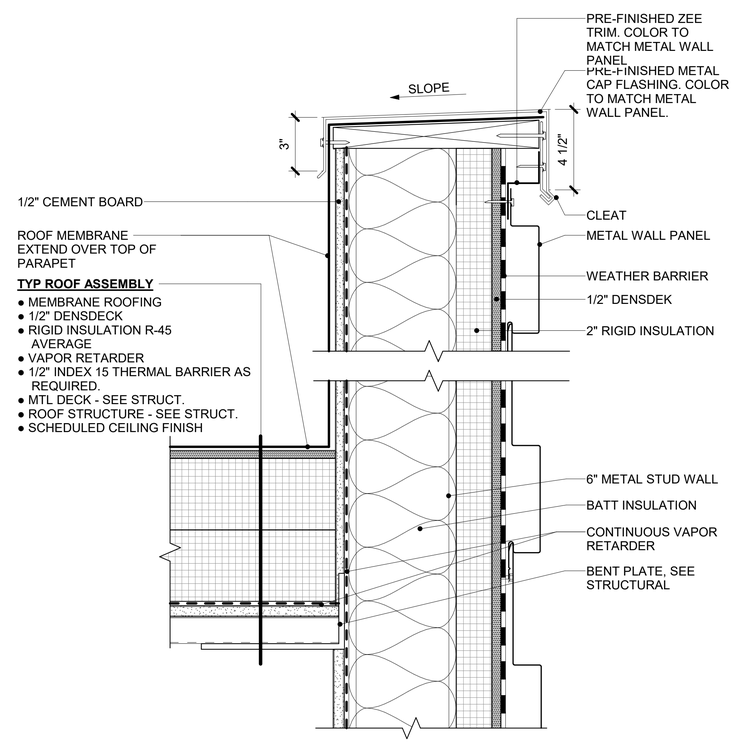

1 MWP PARAPET DETAIL
3" = 1'-0"

STATE OF ALASKA 49TH
DAVE JAMES DREHER
A-14794
Registered Professional Architect
5/9/18

Burkhart Croft ARCHITECTS LLC
880 N Street Suite 302 | Anchorage Alaska 99501
T: 907.929.9334 | www.burkhart-croft.com

MATANUSKA-SUSITNA BOROUGH

MSB FIRE STATION 6-2

WASILLA, ALASKA

DATE: 5/9/2018
DRAWN: TOS
CHECKED: DJD
PROJECT: 1725
DRAWING TITLE: EXTERIOR DETAILS
REVISIONS:
SHEET NO:
A6.3

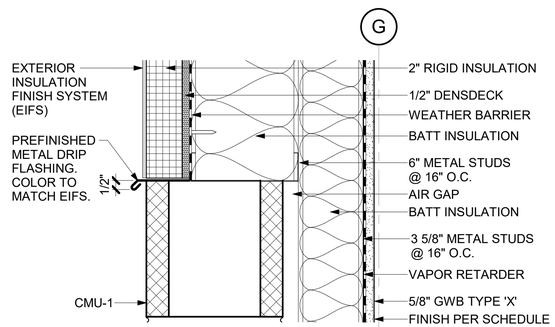

9 EIFS/CMU TRANSITION DETAIL
3" = 1'-0"

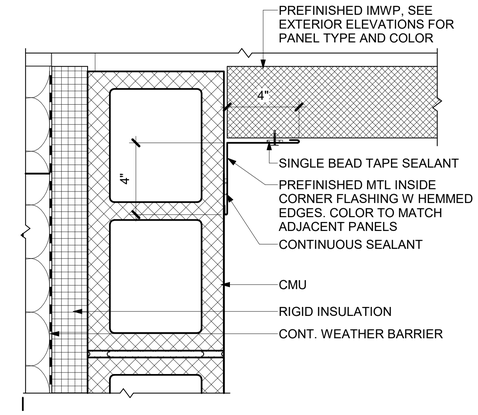

6 TYP. INSIDE CORNER @ CMU & IMWP
3" = 1'-0"

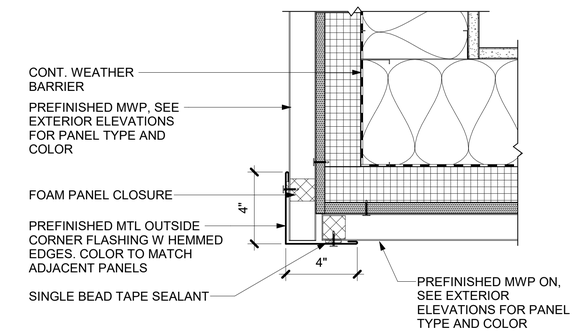

3 TYP. OUTSIDE CORNER @ MWP
3" = 1'-0"

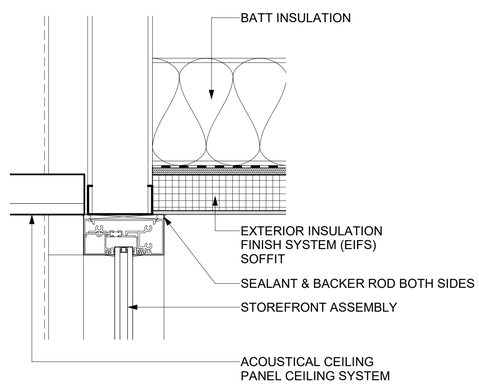

8 STOREFRONT HEAD
3" = 1'-0"

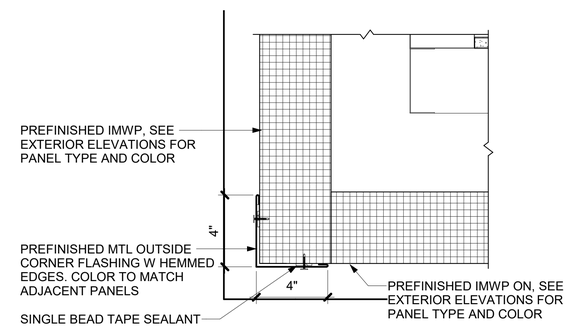

5 TYP. OUTSIDE CORNER @ IMWP
3" = 1'-0"

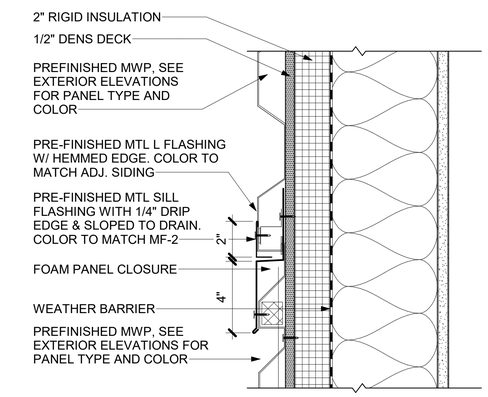

2 TYP. HORIZ. JOINT @ MWP
3" = 1'-0"

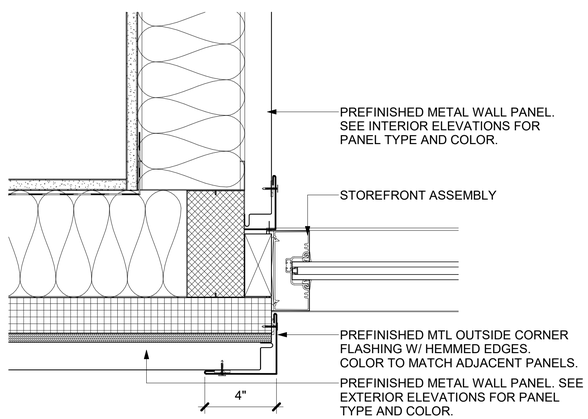

7 STOREFRONT WALL JAMB DETAIL
3" = 1'-0"

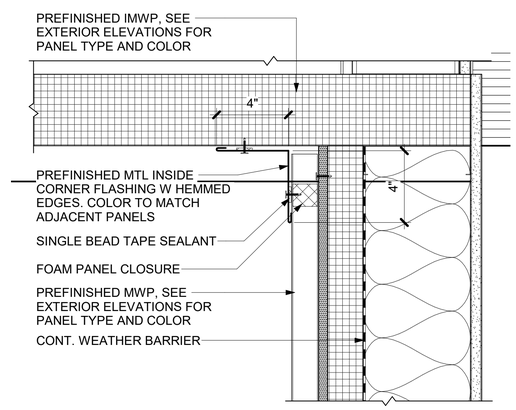

4 TYP. INSIDE CORNER @ MWP & IMP
3" = 1'-0"

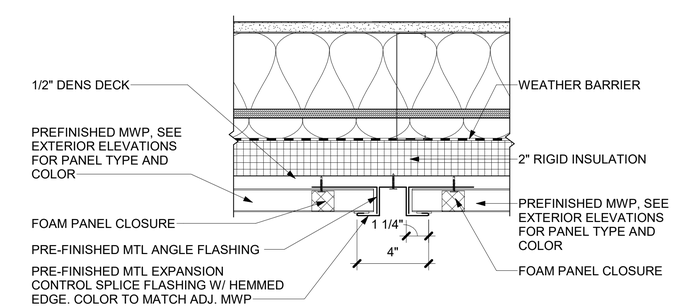

1 TYP. VERT. CONTROL JOINT @ MWP
3" = 1'-0"

STATE OF ALASKA 49TH
DAVE JAMES DREHER
A-14794
Registered Professional Architect
5/9/18

Burkhart Croft ARCHITECTS LLC
880 N Street Suite 302 | Anchorage Alaska 99501
T: 907.929.9334 | www.burkhart-croft.com

MATANUSKA-SUSITNA BOROUGH

MSB FIRE STATION 6-2

WASILLA, ALASKA

DATE: 5/9/2018
DRAWN: BDN
CHECKED: DJD
PROJECT: 1725
DRAWING TITLE: EXTERIOR DETAILS
REVISIONS:
SHEET NO:
A6.4

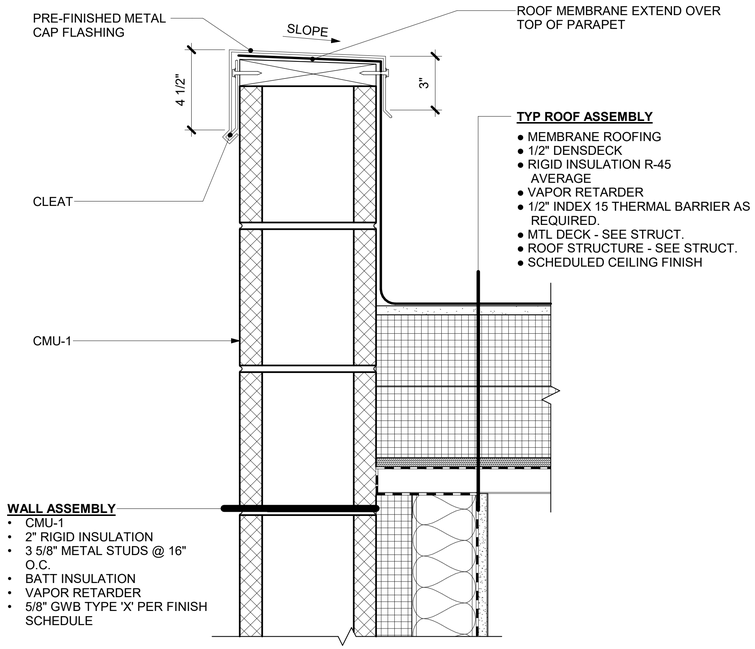

8 CMU PARAPET
3" = 1'-0"

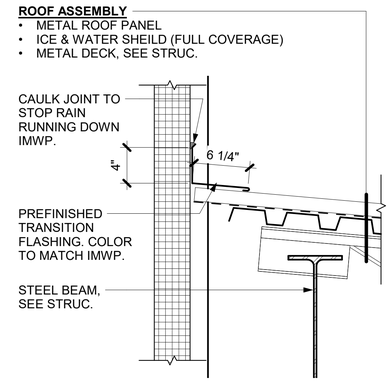

5 CANOPY HIGH EAVE FLASHING
1 1/2" = 1'-0"

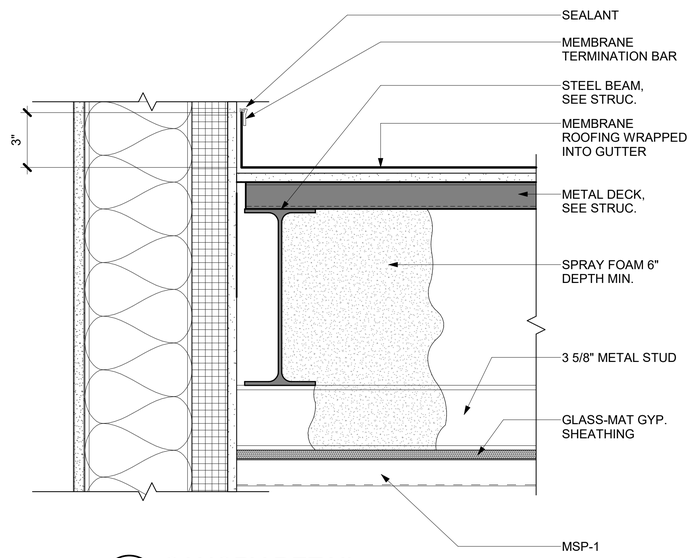

2 CANOPY DETAIL
3" = 1'-0"

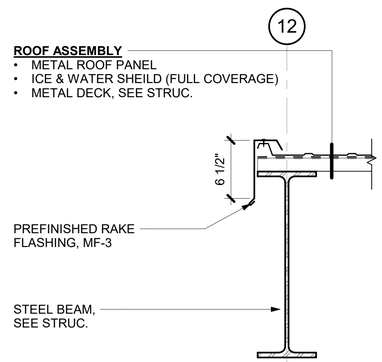

4 CANOPY RAKE FLASHING
1 1/2" = 1'-0"

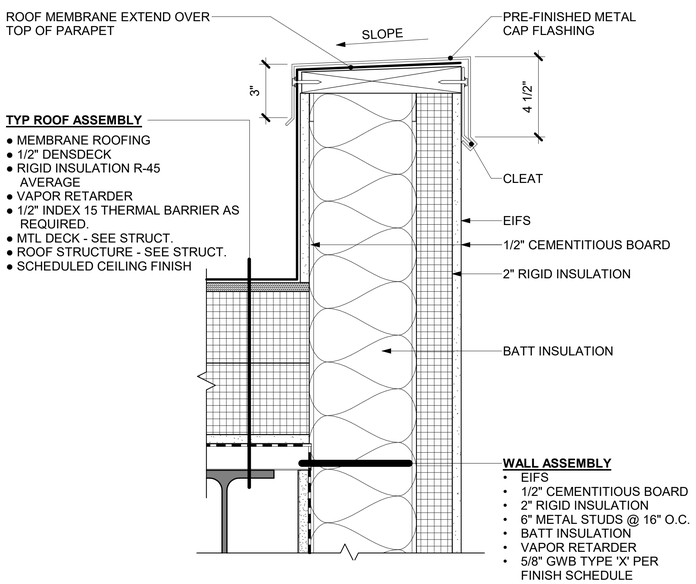

7 EIFS PARAPET CAP
3" = 1'-0"

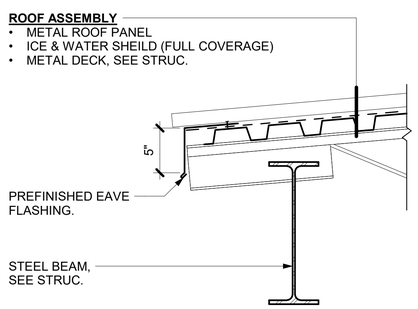

3 CANOPY EAVE
1 1/2" = 1'-0"

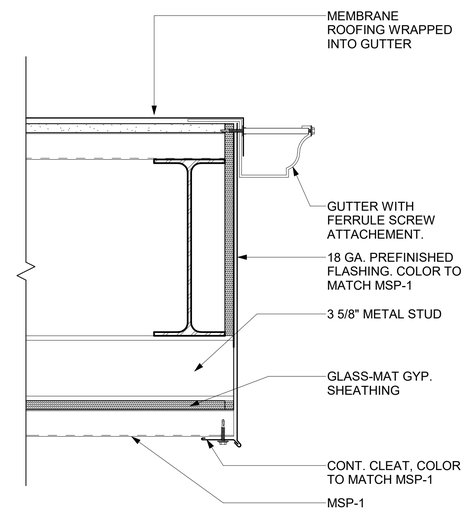

1 CANOPY DETAIL
3" = 1'-0"

STATE OF ALASKA
49TH
DAVE JAMES DREHER
A-14794
Registered Professional Architect
5/9/18

Burkhart Croft
ARCHITECTS LLC
880 N Street Suite 302 | Anchorage Alaska 99501
T: 907.929.9334 | www.burkhart-croft.com

MATANUSKA-SUSITNA BOROUGH

MSB FIRE STATION 6-2

WASILLA, ALASKA

DATE:	5/9/2018
DRAWN:	BDN/TOS
CHECKED:	DJD
PROJECT:	1725
DRAWING TITLE:	EXTERIOR DETAILS
REVISIONS:	
SHEET NO:	**A6.5**

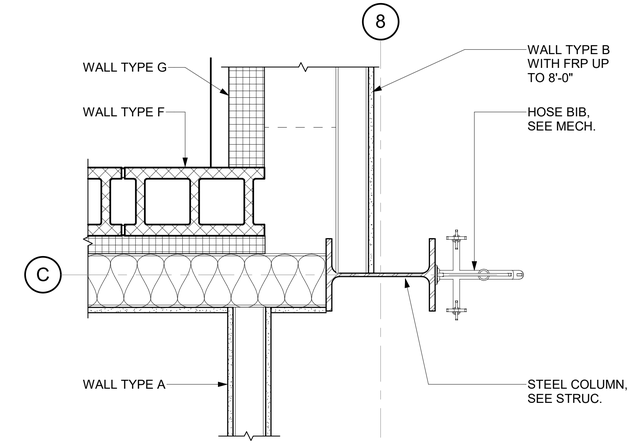

3 INTERSECTION DETAIL
1 1/2" = 1'-0"

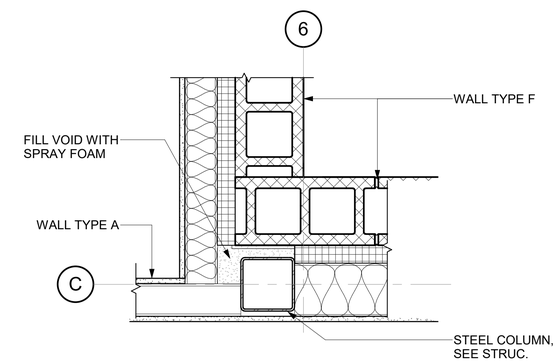

2 INTERSECTION DETAIL
1 1/2" = 1'-0"

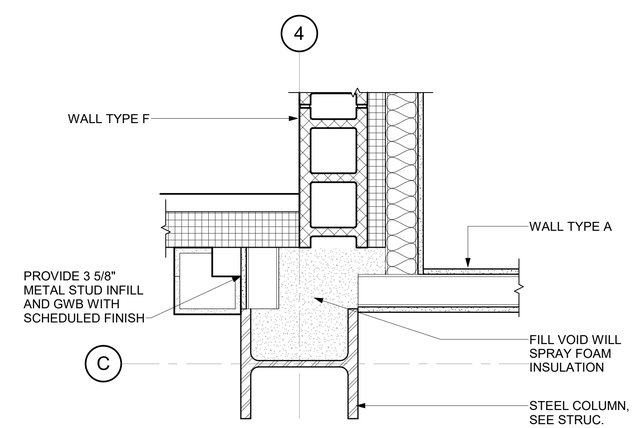

1 INTERSECTION DETAIL
1 1/2" = 1'-0"

STATE OF ALASKA 49TH
DAVE JAMES DREHER
A-14794
Registered Professional Architect
5/9/18

Burkhart Croft
ARCHITECTS LLC
880 N Street Suite 302 | Anchorage Alaska 99501
T: 907.929.9334 | www.burkhart-croft.com

MATANUSKA-SUSITNA BOROUGH

MSB FIRE STATION 6-2

WASILLA, ALASKA

DATE: 5/9/2018
DRAWN: TOS
CHECKED: DJD
PROJECT: 1725
DRAWING TITLE:
EXTERIOR DETAILS

REVISIONS:

SHEET NO:
A6.6

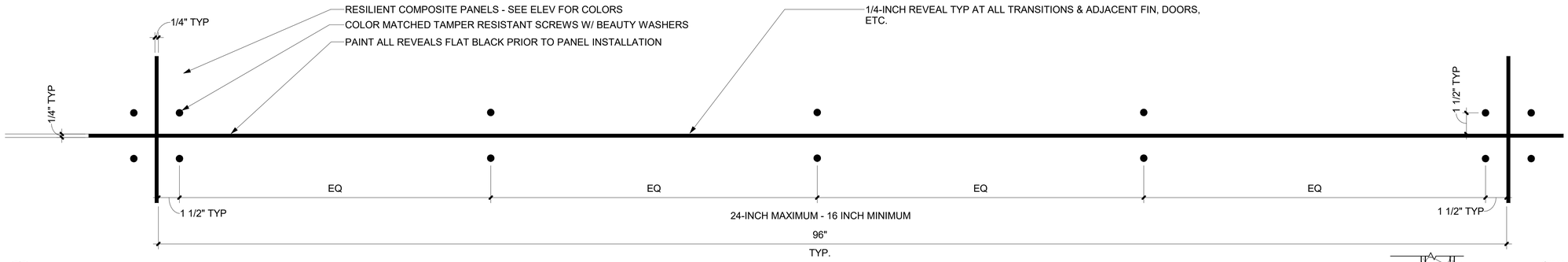

7 RCP DETAIL
3" = 1'-0"

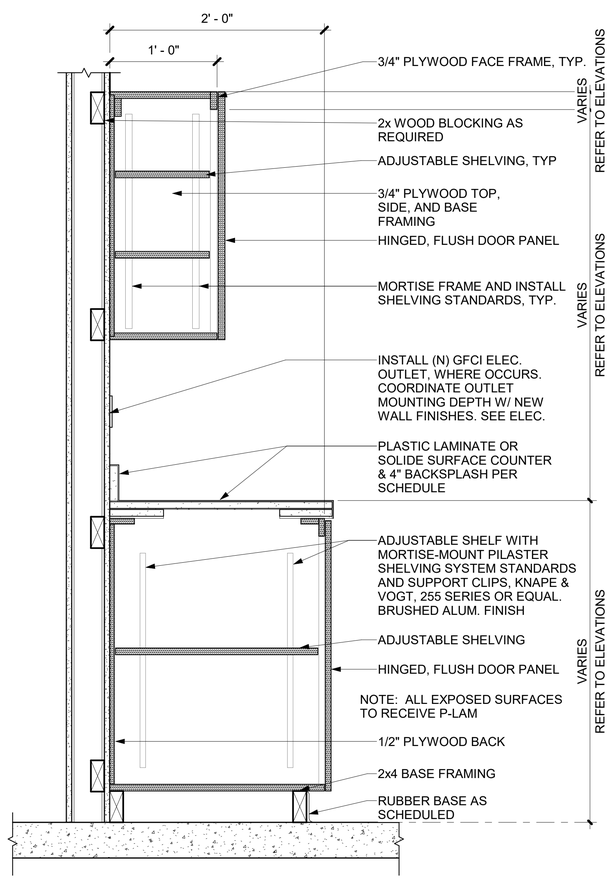

3 TYPICAL CABINET SECTION
1 1/2" = 1'-0"

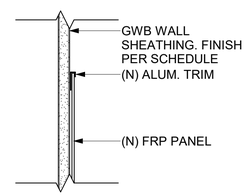

6 FRP TRIM CAP DETAIL
3" = 1'-0"

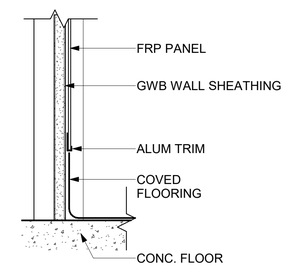

5 FRP BASE DETAIL
3" = 1'-0"

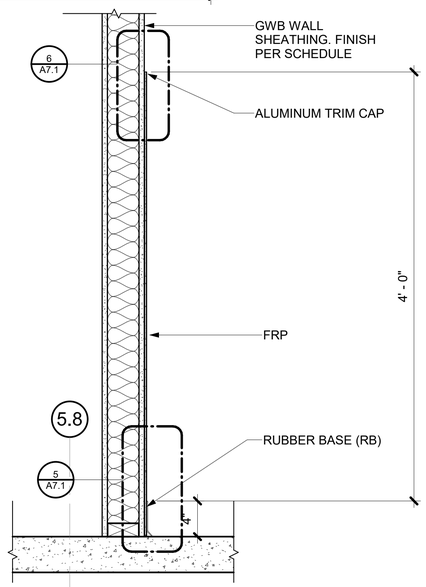

4 TYPICAL FRP SECTION
1 1/2" = 1'-0"

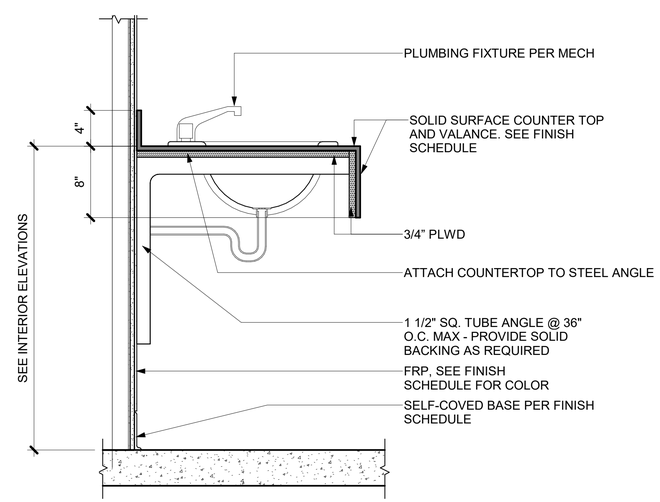

2 TYPICAL TOILET ROOM COUNTER DETAIL
1 1/2" = 1'-0"

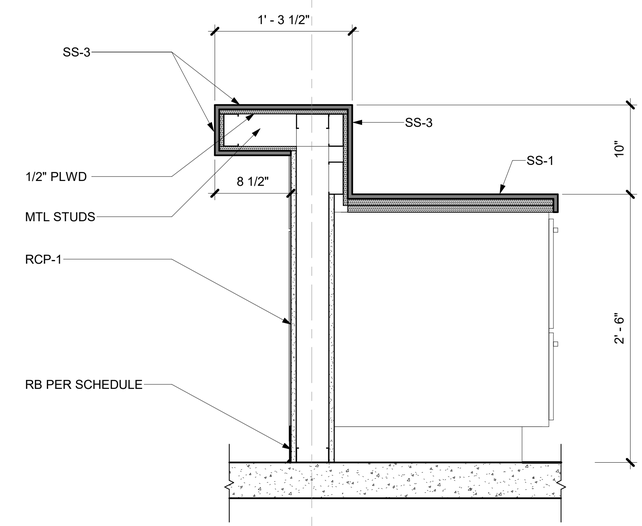

1 RECEPTION 103 SECTION
1 1/2" = 1'-0"

STATE OF ALASKA 49TH
DAVE JAMES DREHER
A-14794
Registered Professional Architect
5/9/18

Burkhart Croft ARCHITECTS LLC
880 N Street Suite 302 | Anchorage Alaska 99501
T: 907.929.9334 | www.burkhart-croft.com

MATANUSKA-SUSITNA BOROUGH
MSB FIRE STATION 6-2
WASILLA, ALASKA

DATE: 5/9/2018
DRAWN: BDN
CHECKED: DJD
PROJECT: 1725
DRAWING TITLE: INTERIOR DETAILS
REVISIONS:
SHEET NO:
A7.1

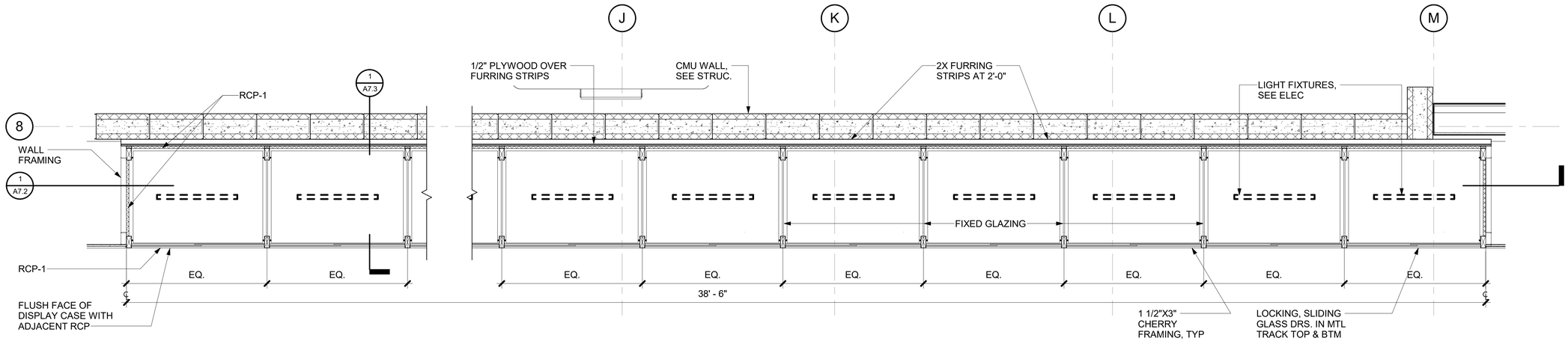

2 LARGE DISPLAY CASE PLAN

3/4" = 1'-0"

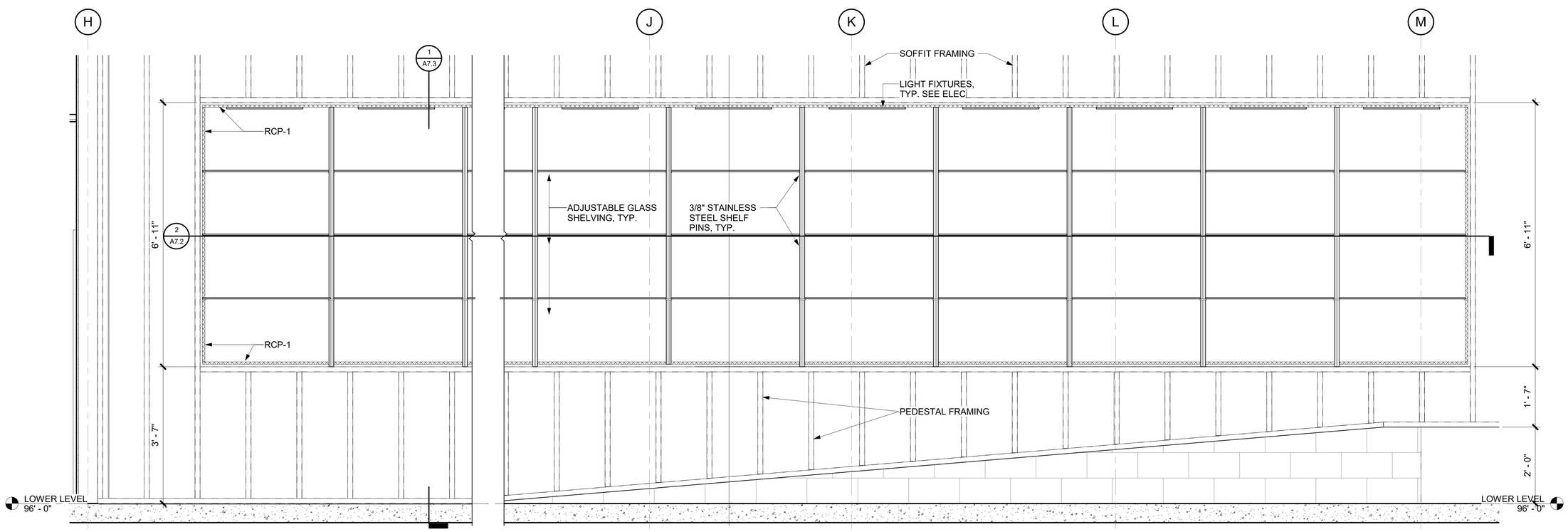

1 LARGE DISPLAY CASE SECTION

3/4" = 1'-0"

STATE OF ALASKA 49TH
DAVE JAMES DREHER
A-14794
Registered Professional Architect
5/9/18

Burkhart Croft
ARCHITECTS LLC
880 N Street Suite 302 | Anchorage Alaska 99501
T: 907.929.9334 | www.burkhart-croft.com

MATANUSKA-SUSITNA BOROUGH

MSB FIRE STATION 6-2

WASILLA, ALASKA

DATE:	5/9/2018
DRAWN:	TOS
CHECKED:	DJD
PROJECT:	1725
DRAWING TITLE:	LARGE DISPLAY CASE ELEVATION AND SECTIONS
REVISIONS:	
SHEET NO:	**A7.2**

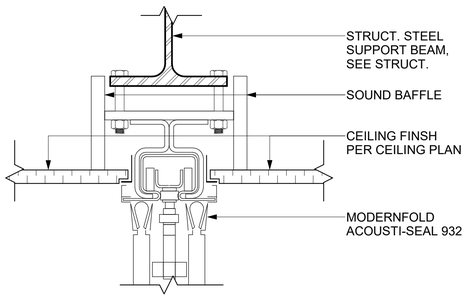

6 FOLDING PARTITION @ CEILING
3" = 1'-0"

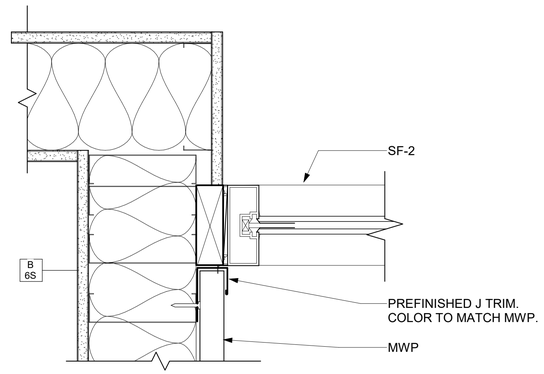

5 STOREFRONT WALL JAMB DETAIL
3" = 1'-0"

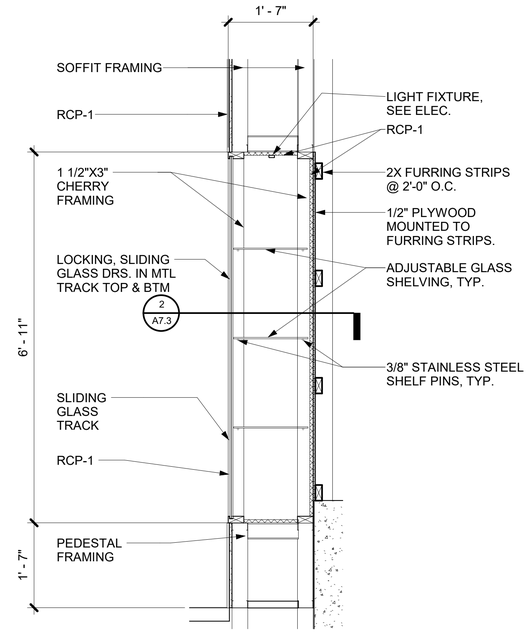

4 SMALL DISPLAY CASE SECTION
3/4" = 1'-0"

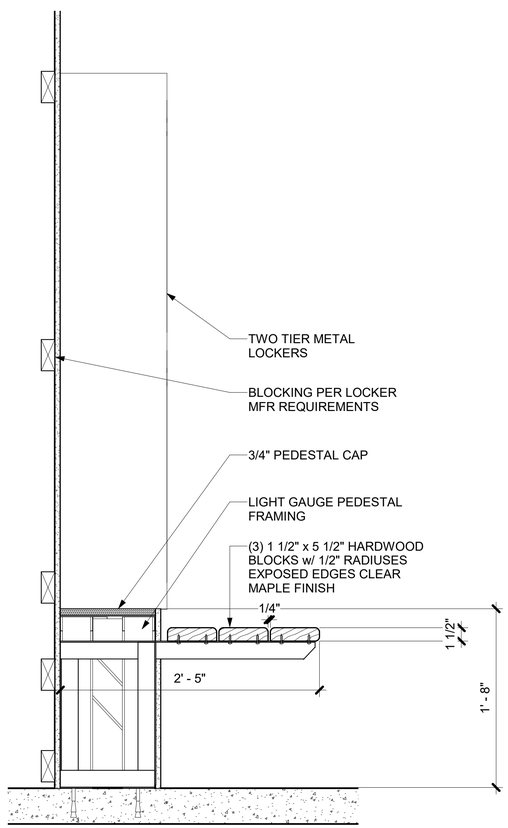

3 TYPICAL LOCKER & BENCH
1 1/2" = 1'-0"

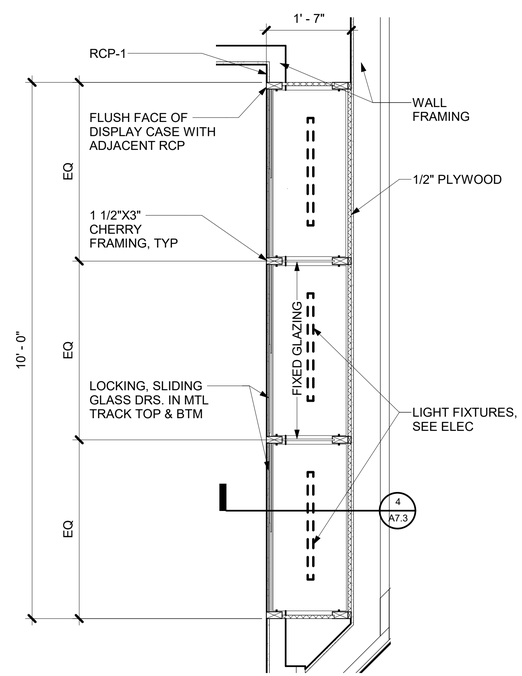

2 SMALL DISPLAY CASE PLAN
3/4" = 1'-0"

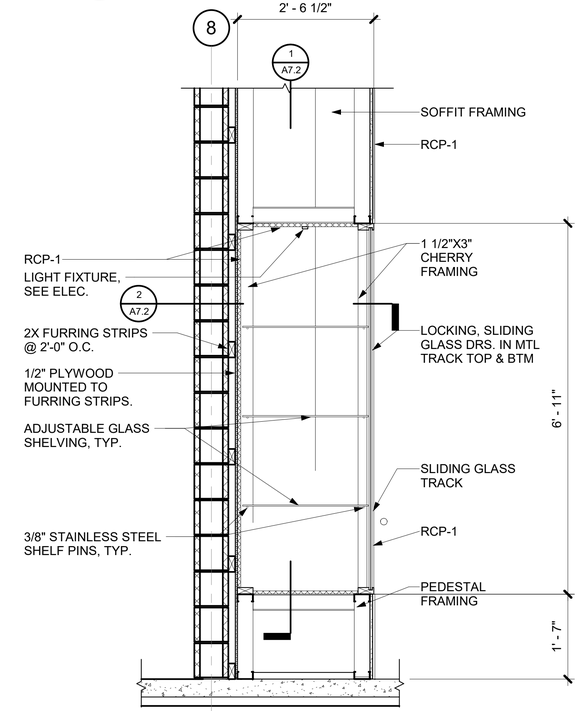

1 LARGE DISPLAY CASE SECTION
3/4" = 1'-0"

STATE OF ALASKA 49TH
DAVE JAMES DREHER
A-14794
Registered Professional Architect
5/9/18

Burkhart Croft
ARCHITECTS LLC
880 N Street Suite 302 | Anchorage Alaska 99501
T: 907.929.9334 | www.burkhart-croft.com

MATANUSKA-SUSITNA BOROUGH

MSB FIRE STATION 6-2

WASILLA, ALASKA

DATE: 5/9/2018
DRAWN: TOS
CHECKED: DJD
PROJECT: 1725
DRAWING TITLE:
DISPLAY CASE AND INTERIOR DETAILS
REVISIONS:
SHEET NO:
A7.3

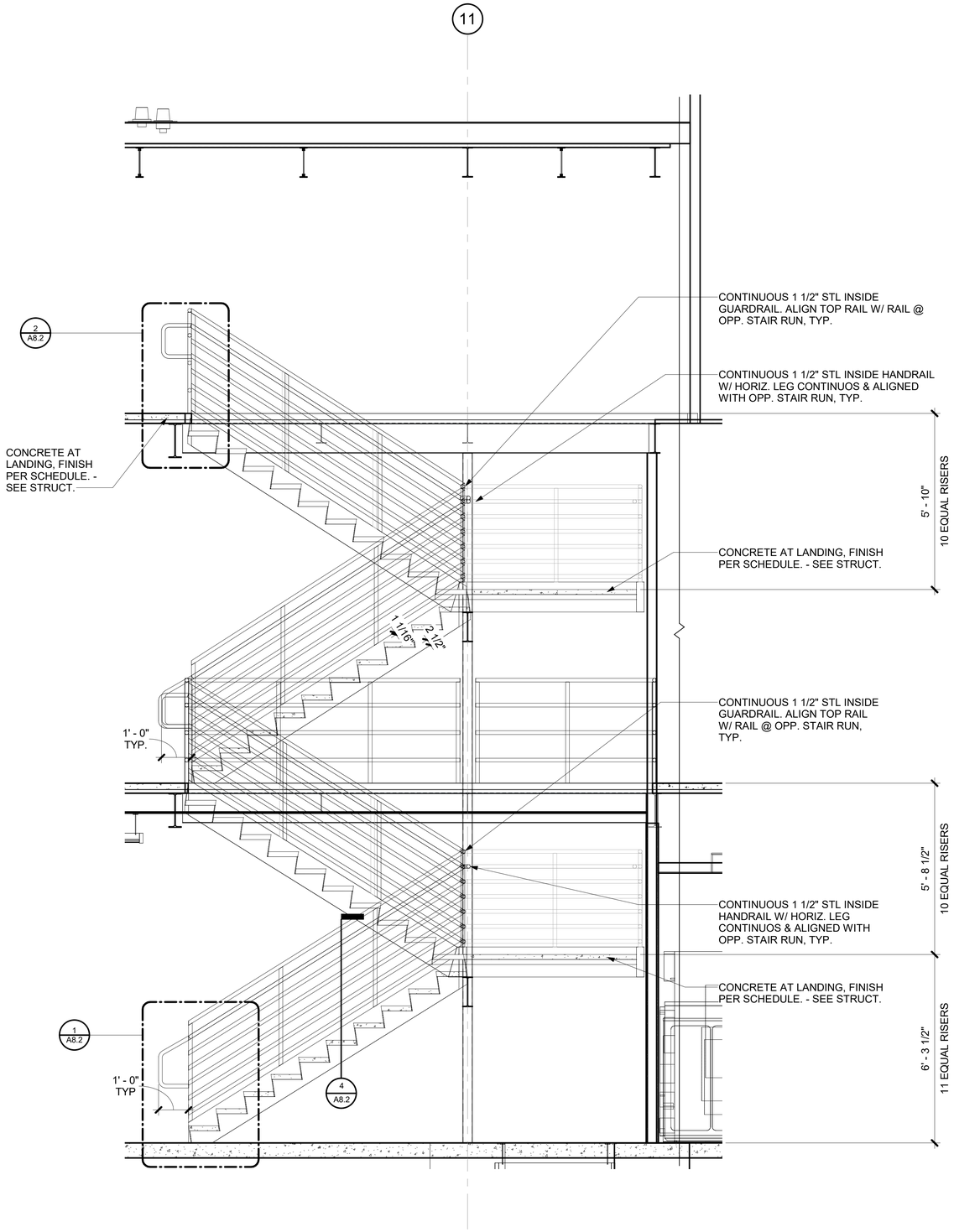

3 ENLARGED STAIR SECTION
1/2" = 1'-0"

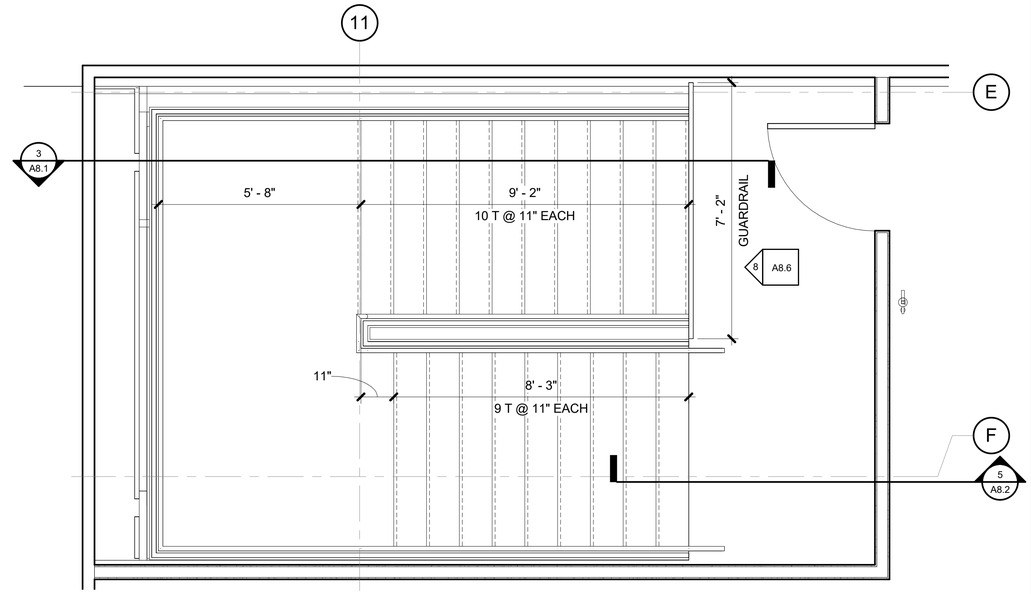

2 ENLARGED ROOF ACCESS STAIR PLAN
1/2" = 1'-0"

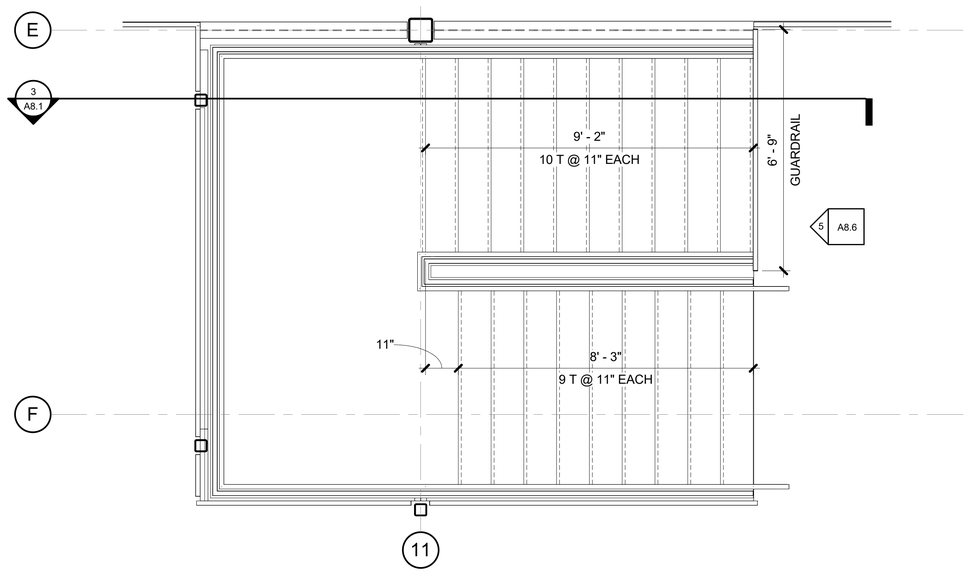

1 ENLARGED MEZZANINE STAIR PLAN
1/2" = 1'-0"

STATE OF ALASKA
49TH
DAVE JAMES DREHER
A-14794
Registered Professional Architect
5/9/18

Burkhart Croft
ARCHITECTS LLC
880 N Street Suite 302 | Anchorage Alaska 99501
T: 907.929.9334 | www.burkhart-croft.com

MATANUSKA-SUSITNA BOROUGH
MSB FIRE STATION 6-2
WASILLA, ALASKA

DATE: 5/9/2018
DRAWN: TOS
CHECKED: DJD
PROJECT: 1725
DRAWING TITLE: STAIR PLANS
REVISIONS:
SHEET NO:
A8.1

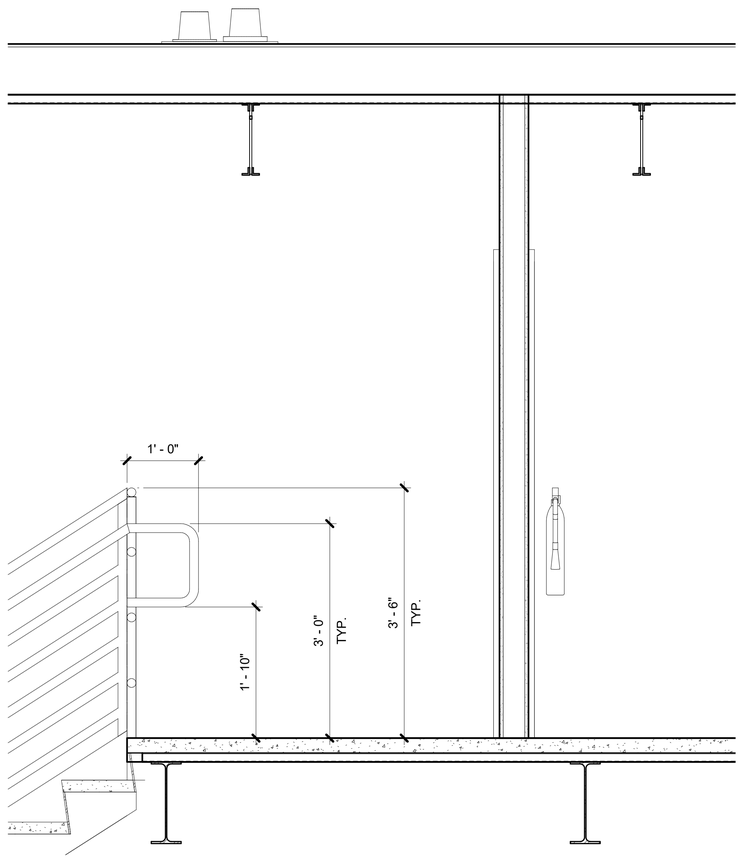

5 MEZZANINE STAIR LANDING
1" = 1'-0"

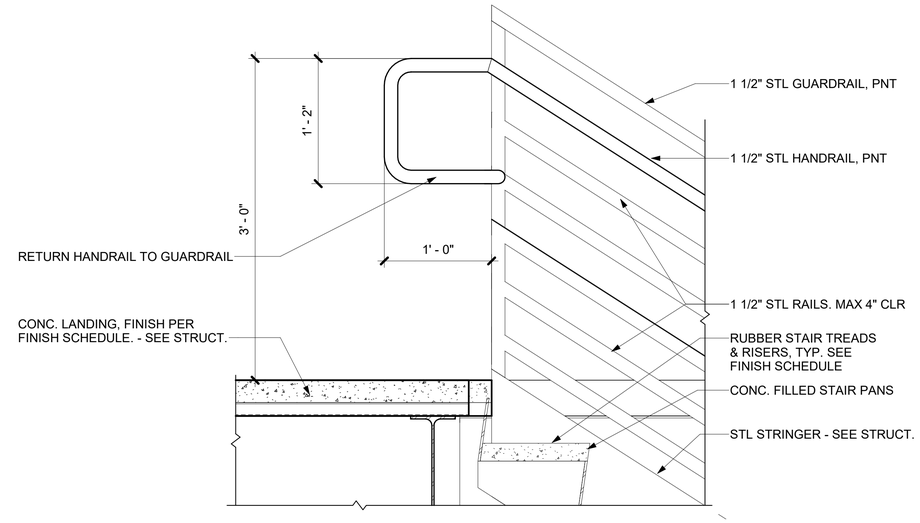

2 TYP. STAIR DETAIL @ UPPER LANDING
1 1/2" = 1'-0"

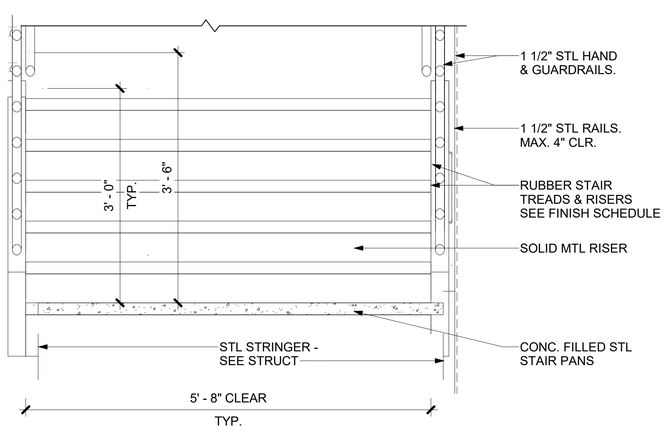

4 TYP TREAD SECTION
1" = 1'-0"

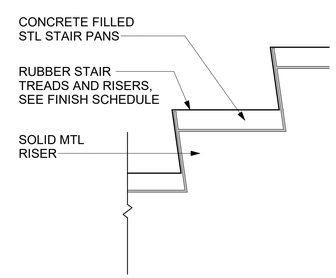

3 TYP. STAIR TREAD
1 1/2" = 1'-0"

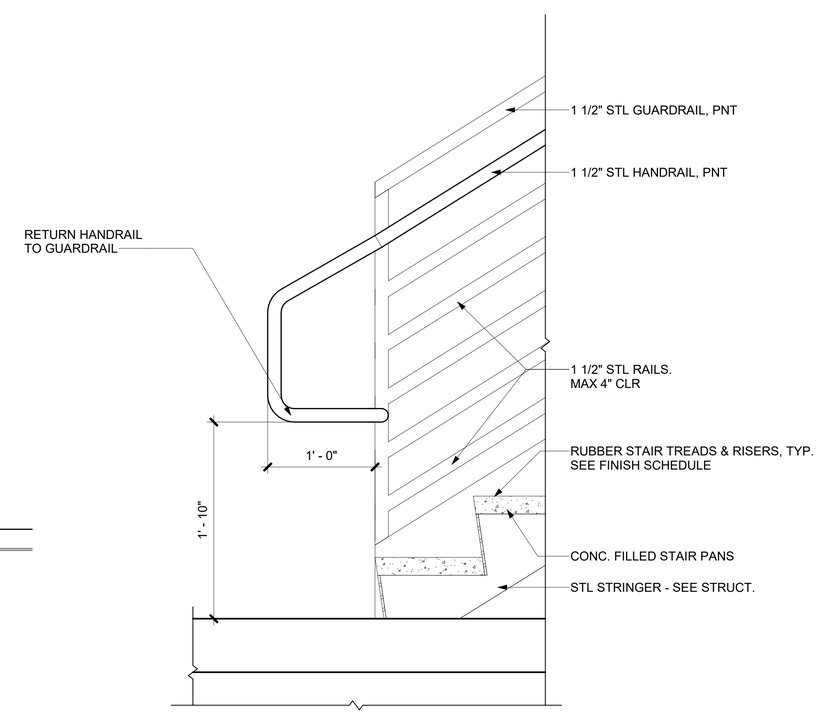

1 TYP. STAIR DETAIL @ LOWER LANDING
1 1/2" = 1'-0"

STATE OF ALASKA 49TH
DAVE JAMES DREHER
A-14794
Registered Professional Architect
5/9/18

Burkhart Croft ARCHITECTS LLC
880 N Street Suite 302 | Anchorage Alaska 99501
T: 907.929.9334 | www.burkhart-croft.com

MATANUSKA-SUSITNA BOROUGH
MSB FIRE STATION 6-2
WASILLA, ALASKA

DATE: 5/9/2018
DRAWN: TOS
CHECKED: DJD
PROJECT: 1725
DRAWING TITLE: STAIR SECTIONS AND DETAILS
REVISIONS:
SHEET NO:
A8.2

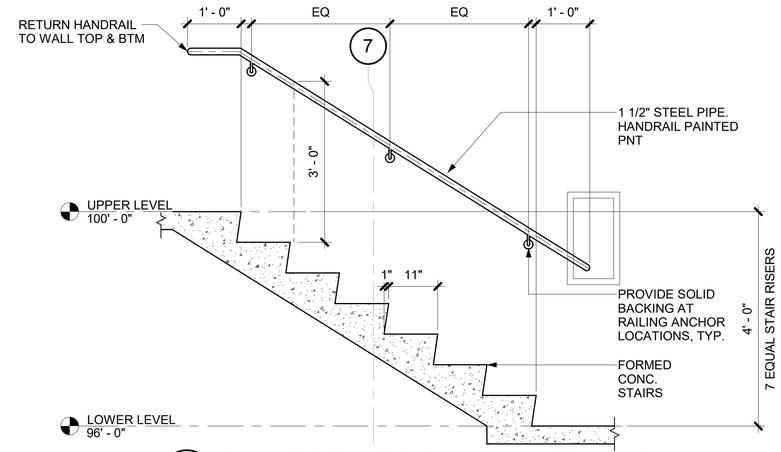

3 TRANSITION STAIR ELEVATION - NORTH
3/4" = 1'-0"

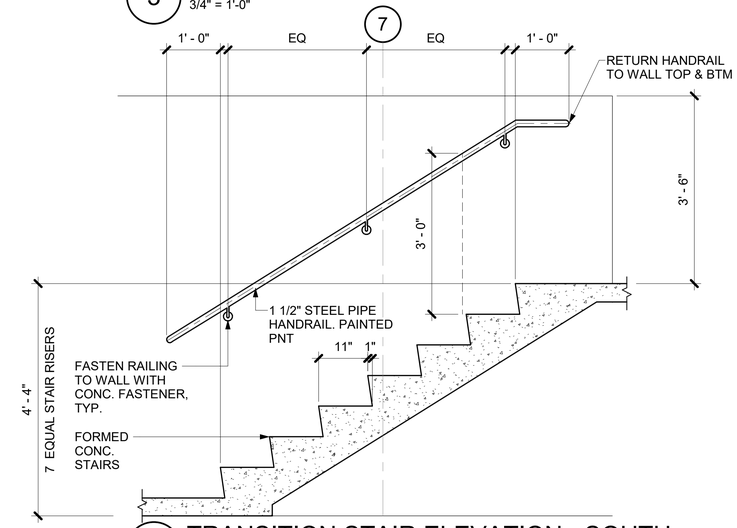

2 TRANSITION STAIR ELEVATION - SOUTH
3/4" = 1'-0"

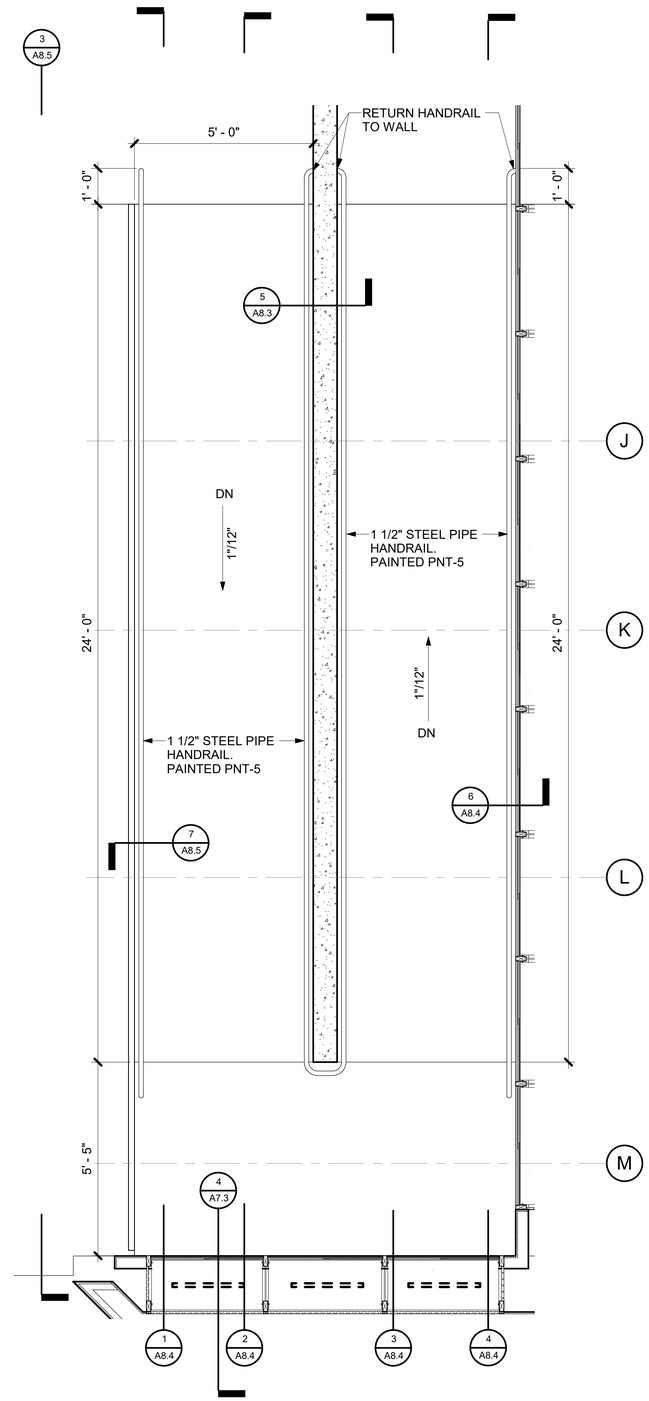

4 RAMP PLAN
1/2" = 1'-0"

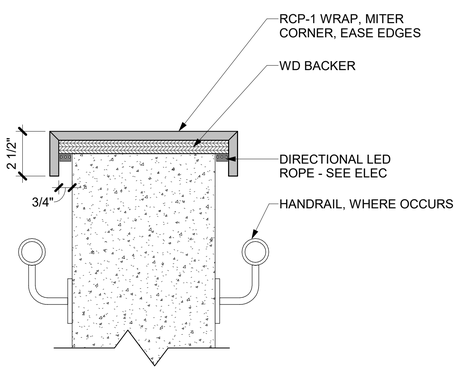

5 ENTRY GUARDRAIL CAP DETAIL
3" = 1'-0"

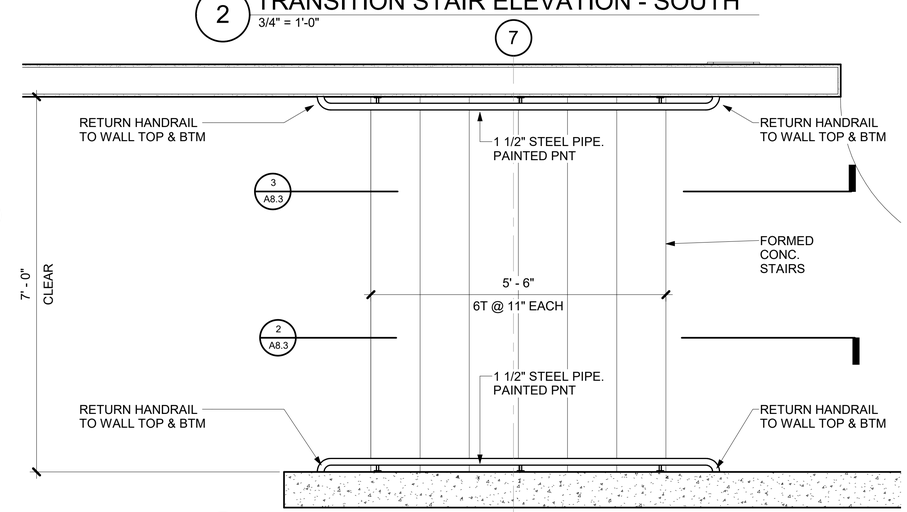

1 TRANSITION STAIR PLAN
3/4" = 1'-0"

STATE OF ALASKA 49TH
DAVE JAMES DREHER
A-14794
Registered Professional Architect
5/9/18

Burkhart Croft
ARCHITECTS LLC
880 N Street Suite 302 | Anchorage Alaska 99501
T: 907.929.9334 | www.burkhart-croft.com

MATANUSKA-SUSITNA BOROUGH

MSB FIRE STATION 6-2

WASILLA, ALASKA

DATE:	5/9/2018
DRAWN:	TOS
CHECKED:	DJD
PROJECT:	1725
DRAWING TITLE:	STAIR AND RAMP DETAILS
REVISIONS:	
SHEET NO:	**A8.3**

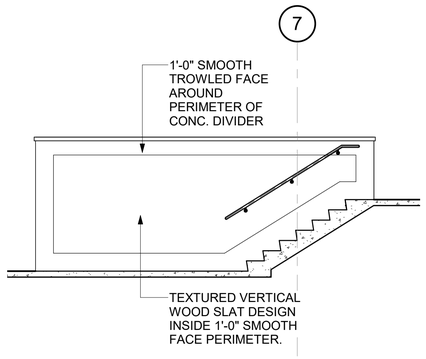

7 LOWER STAIR - SOUTH
1/4" = 1'-0"

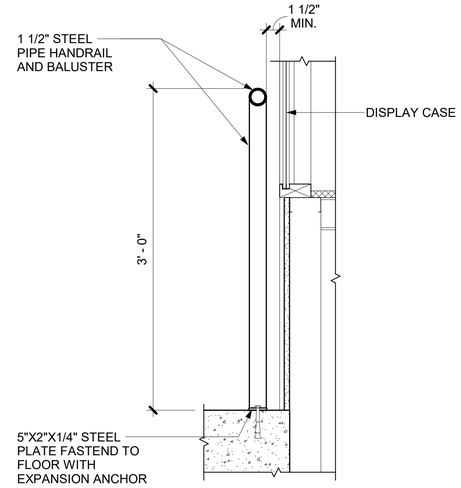

6 FLOOR MOUNTED HANDRAIL
1 1/2" = 1'-0"

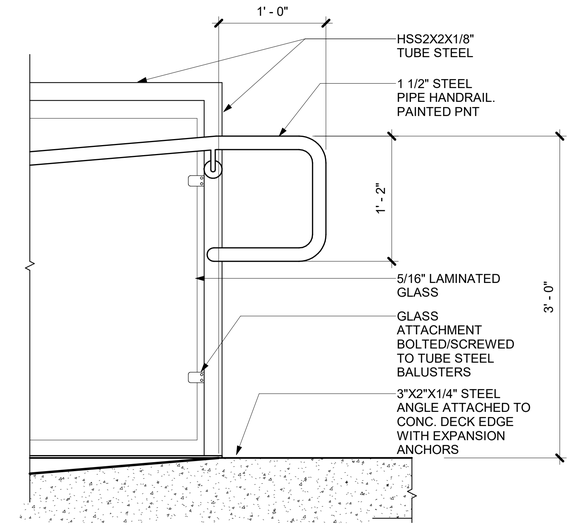

5 RAMP HANDRAIL DETAIL
1 1/2" = 1'-0"

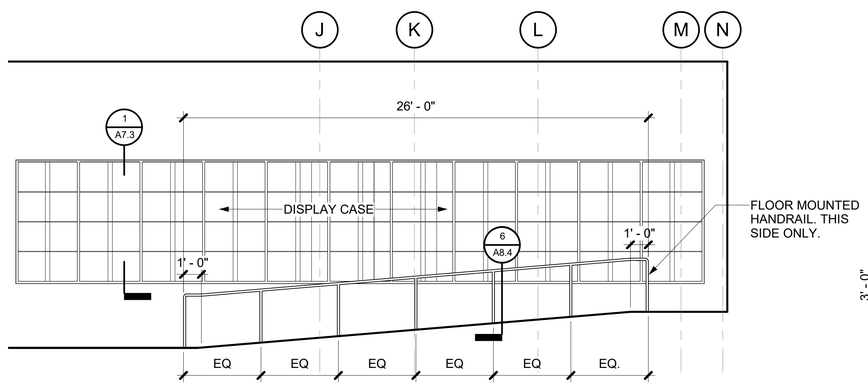

4 RAMP AND LARGE SHOWCASE ELEVATION - EAST
1/4" = 1'-0"

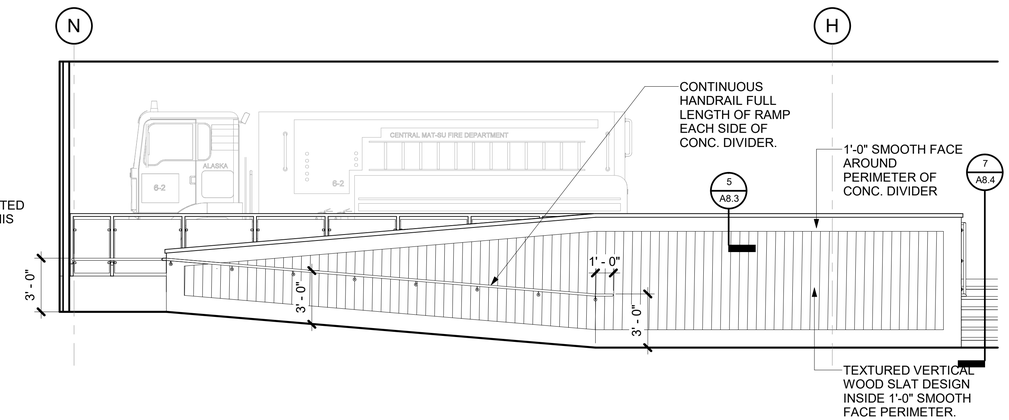

3 RAMP ELEVATION - WEST
1/4" = 1'-0"

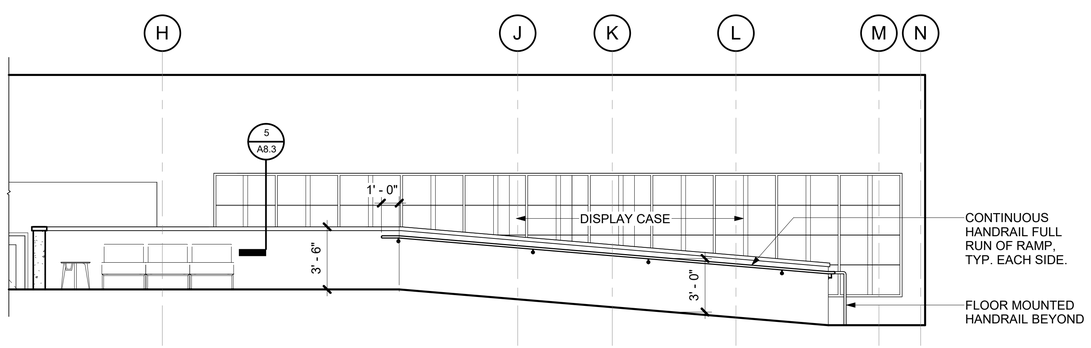

2 RAMP AND SHOWCASE ELEVATION - EAST
1/4" = 1'-0"

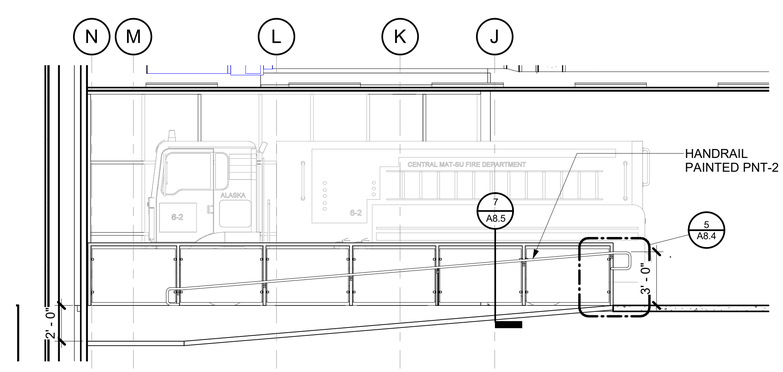

1 RAMP AND GUARDRAIL ELEVATION - WEST
1/4" = 1'-0"

STATE OF ALASKA 49TH DAVE JAMES DREHER A-14794 Registered Professional Architect
5/9/18

Burkhart Croft ARCHITECTS LLC
880 N Street Suite 302 | Anchorage Alaska 99501
T: 907.929.9334 | www.burkhart-croft.com

MATANUSKA-SUSITNA BOROUGH

MSB FIRE STATION 6-2

WASILLA, ALASKA

DATE:	5/9/2018
DRAWN:	TOS
CHECKED:	DJD
PROJECT:	1725
DRAWING TITLE:	RAMP ELEVATIONS
REVISIONS:	
SHEET NO:	**A8.4**

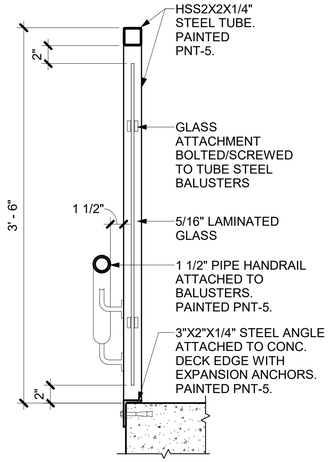

7 MUSEUM RAILING SECTION
1 1/2" = 1'-0"

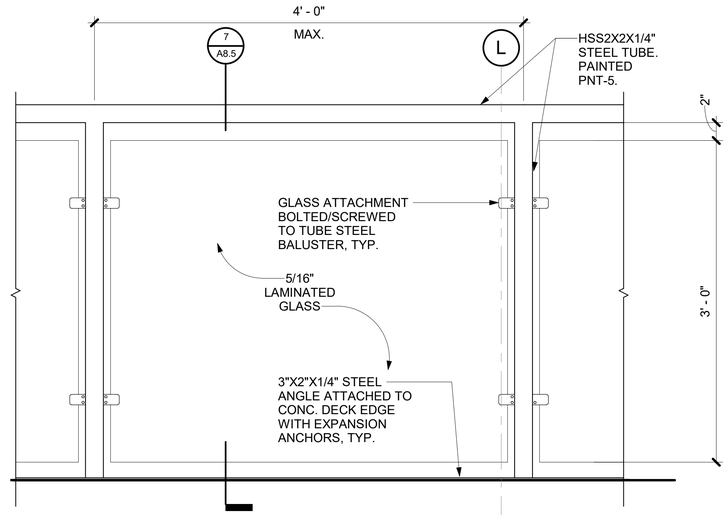

6 ENLARGED MUSEUM RAILING ELEVATION
1 1/2" = 1'-0"

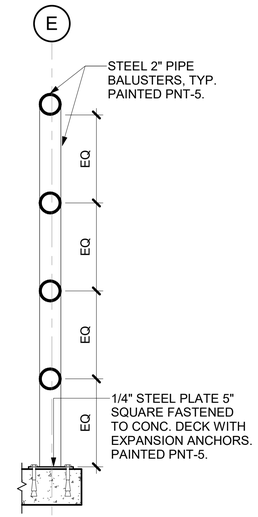

5 TYPICAL GUARDRAIL SECTION
1 1/2" = 1'-0"

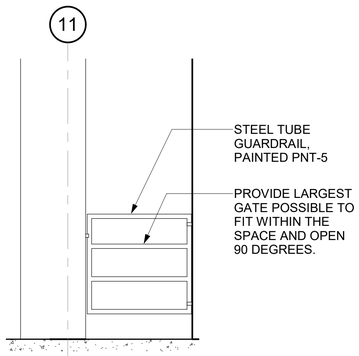

4 PUMP ACCESS 152 - SOUTH
1/2" = 1'-0"

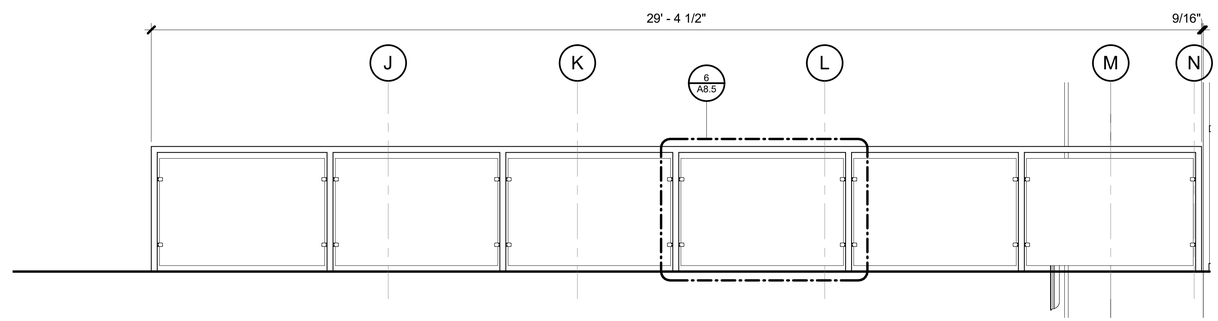

3 MUSEUM RAILING
1/2" = 1'-0"

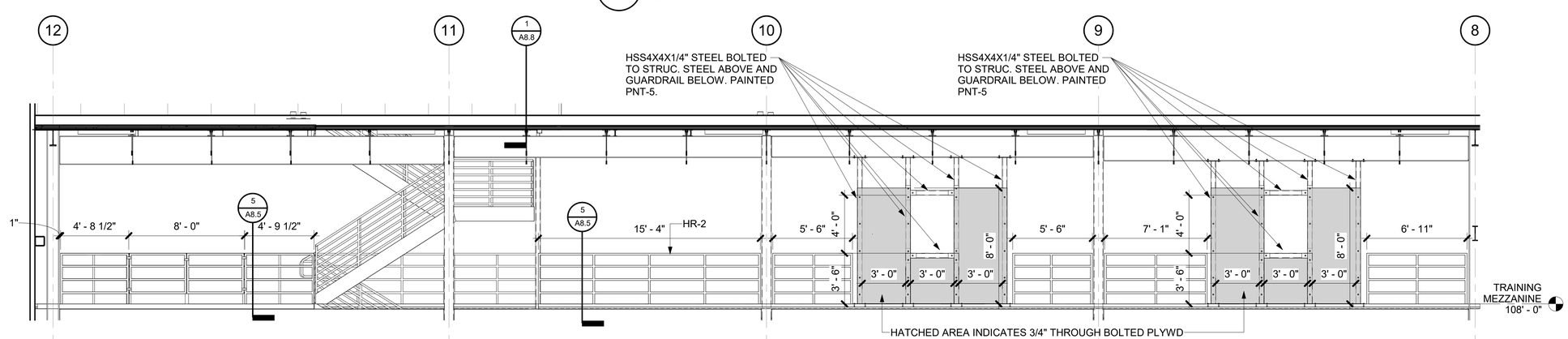

1 MEZZANINE GUARDRAILS WEST SIDE
1/4" = 1'-0"

STATE OF ALASKA
49TH
DAVE JAMES DREHER
A-14794
Registered Professional Architect
5/9/18

Burkhart Croft
ARCHITECTS LLC
880 N Street Suite 302 | Anchorage Alaska 99501
T: 907.929.9334 | www.burkhart-croft.com

MATANUSKA-SUSITNA BOROUGH

MSB FIRE STATION 6-2

WASILLA, ALASKA

DATE:	5/9/2018
DRAWN:	TOS
CHECKED:	DJD
PROJECT:	1725
DRAWING TITLE:	GUARDRAIL DETAILS
REVISIONS:	
SHEET NO:	**A8.5**

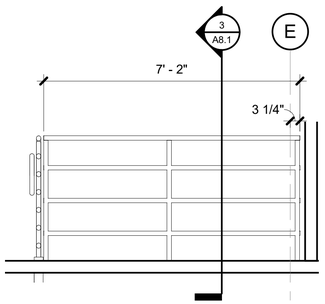

8 ROOF ACCESS RAILING
1/2" = 1'-0"

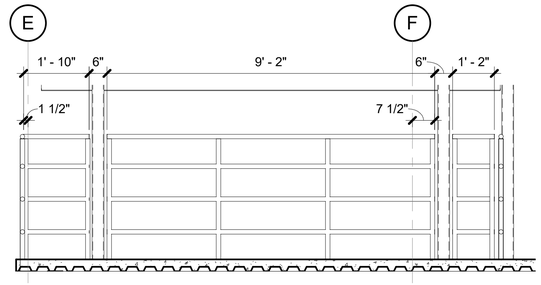

7 MEZZANINE GUARDRAIL WEST
1/2" = 1'-0"

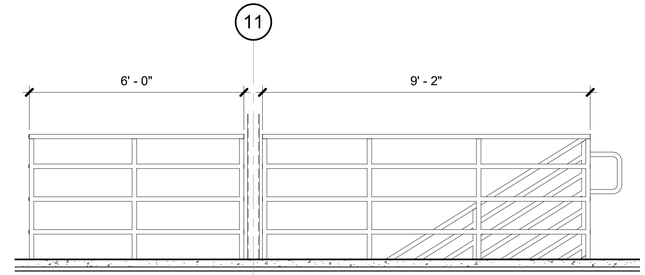

6 MEZZANINE GUARDRAIL SOUTH
1/2" = 1'-0"

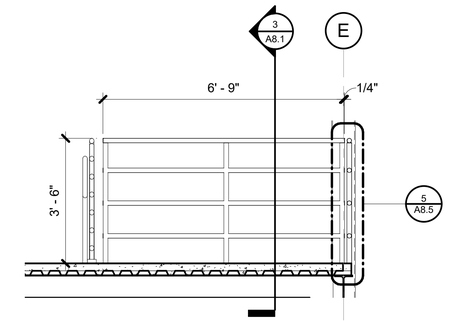

5 MEZZANINE GUARDRAIL EAST
1/2" = 1'-0"

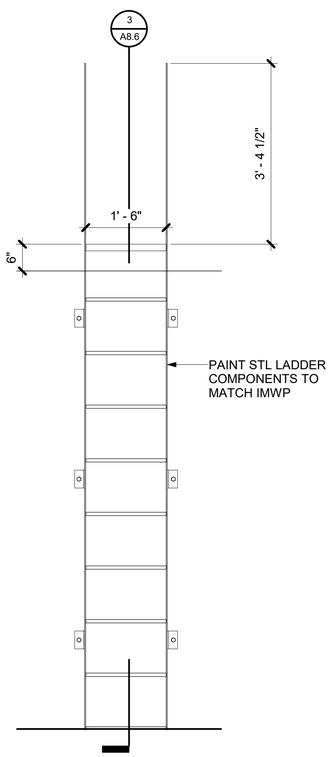

4 EAST ROOF LADDER ELEVATION
3/4" = 1'-0"

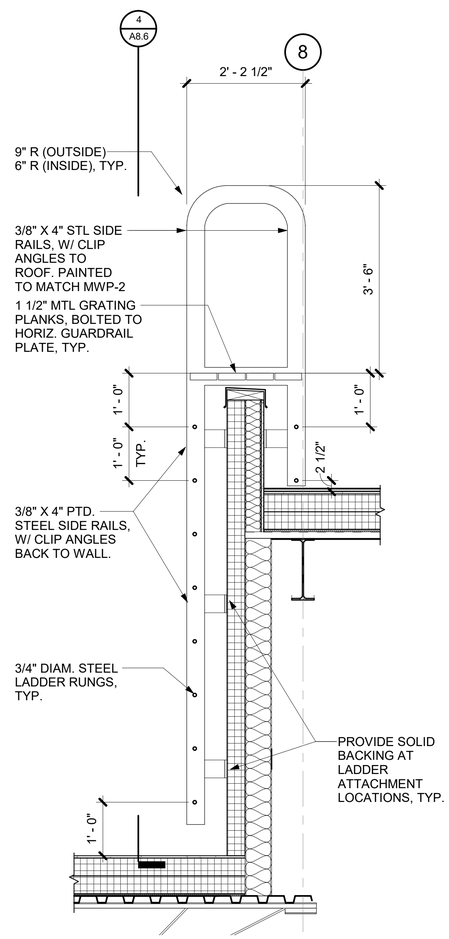

3 EAST ROOF LADDER SECTION
3/4" = 1'-0"

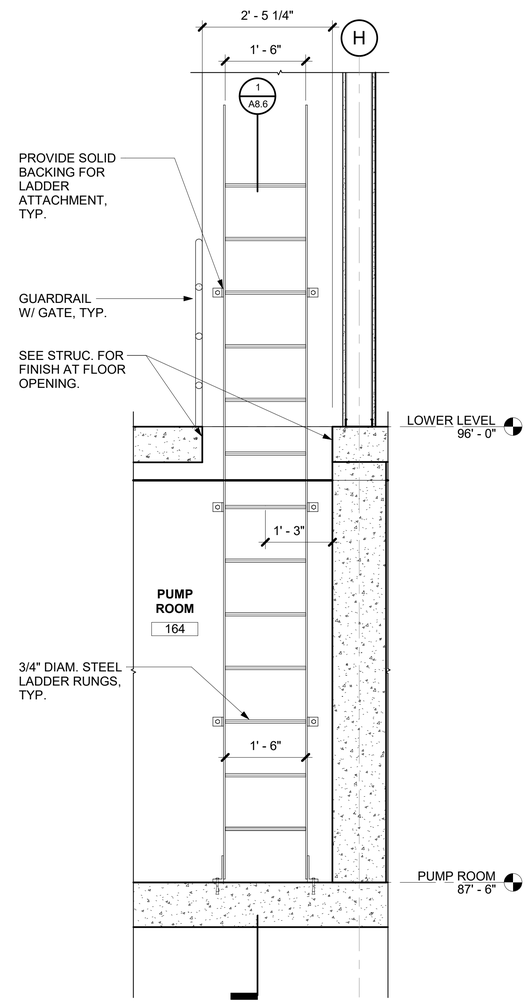

2 PUMP ROOM LADDER SECTION
3/4" = 1'-0"

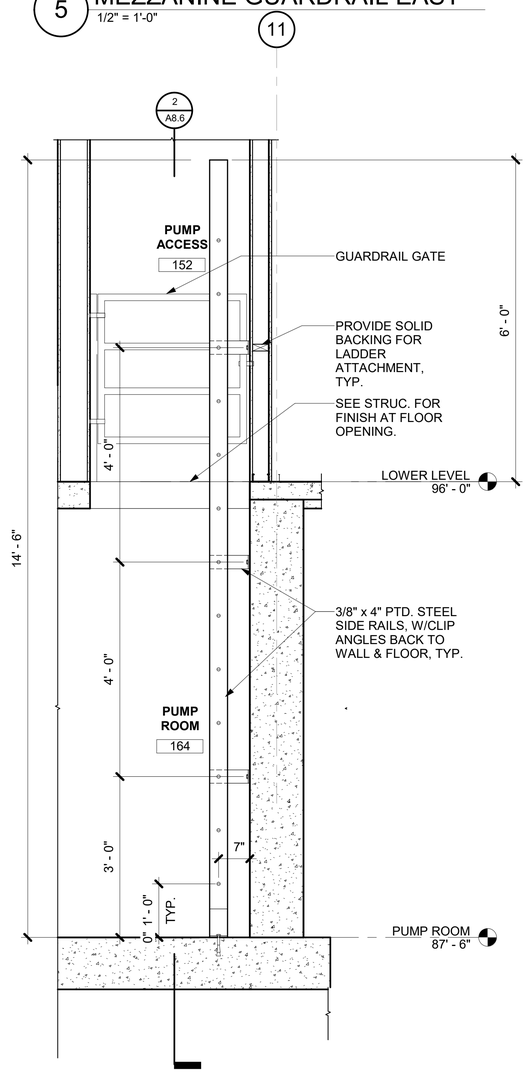

1 PUMP ROOM LADDER SECTION
3/4" = 1'-0"

STATE OF ALASKA
49TH
DAVE JAMES DREHER
A-14794
Registered Professional Architect
5/9/18

Burkhart Croft
ARCHITECTS LLC
880 N Street Suite 302 | Anchorage Alaska 99501
T: 907.929.9334 | www.burkhart-croft.com

MATANUSKA-SUSITNA BOROUGH

MSB FIRE STATION 6-2

WASILLA, ALASKA

DATE:	5/9/2018
DRAWN:	TOS
CHECKED:	DJD
PROJECT:	1725
DRAWING TITLE:	LADDER AND GUARDRAIL DETAILS
REVISIONS:	
SHEET NO:	**A8.6**

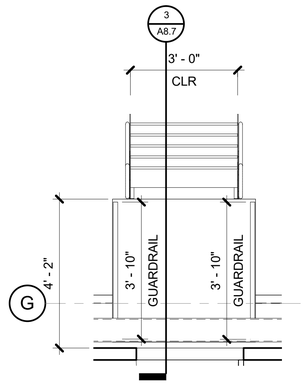

4 ENLARGED ROOF ACCESS PLAN
1/2" = 1'-0"

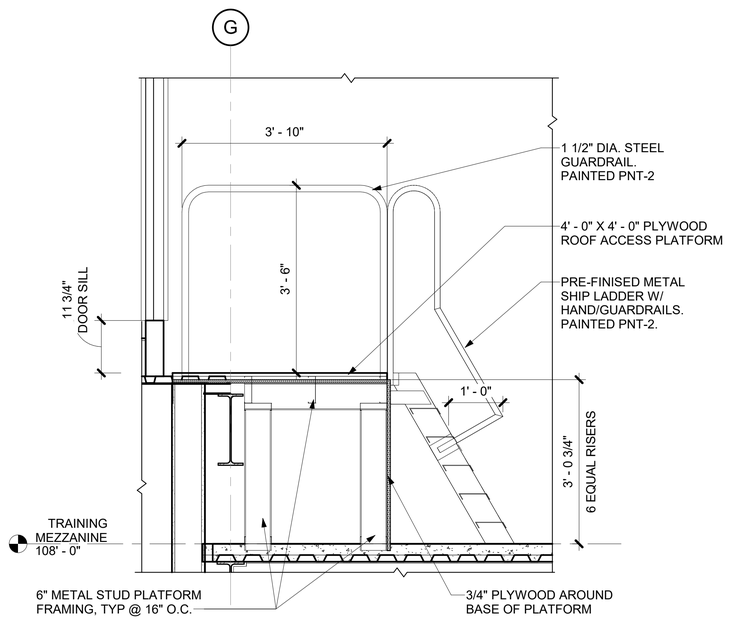

3 ENLARGED SHIP LADDER DETAIL
3/4" = 1'-0"

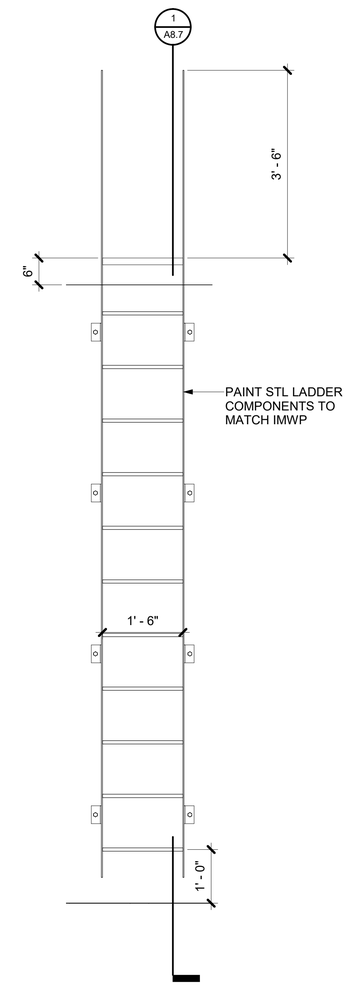

2 WEST ROOF LADDER ELEVATION
3/4" = 1'-0"

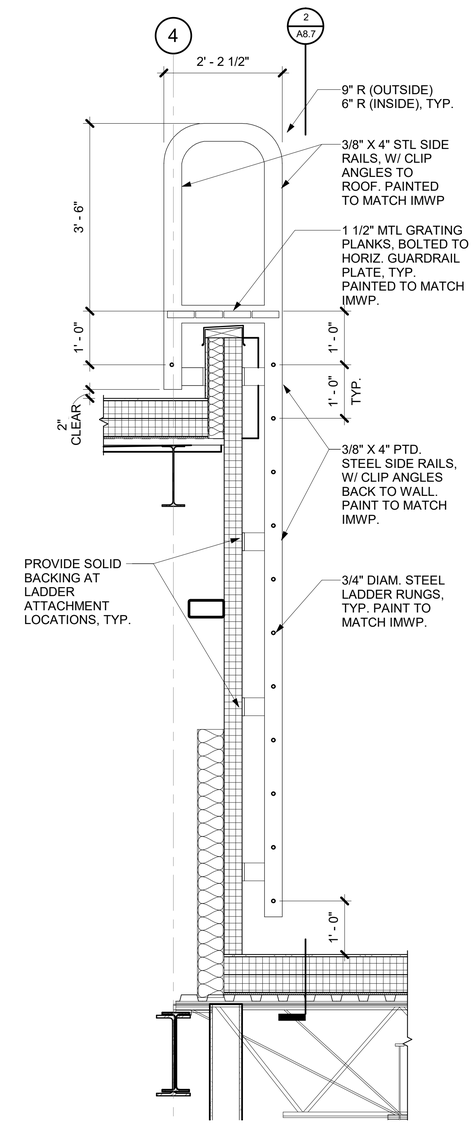

1 WEST ROOF LADDER SECTION
3/4" = 1'-0"

STATE OF ALASKA 49TH
DAVE JAMES DREHER
A-14794
Registered Professional Architect
5/9/18

Burkhart Croft
ARCHITECTS LLC
880 N Street Suite 302 | Anchorage Alaska 99501
T: 907.929.9334 | www.burkhart-croft.com

MATANUSKA-SUSITNA BOROUGH

MSB FIRE STATION 6-2

WASILLA, ALASKA

DATE: 5/9/2018
DRAWN: TOS
CHECKED: DJD
PROJECT: 1725
DRAWING TITLE:
LADDER AND SHIPS LADDER DETAILS
REVISIONS:
SHEET NO:
A8.7

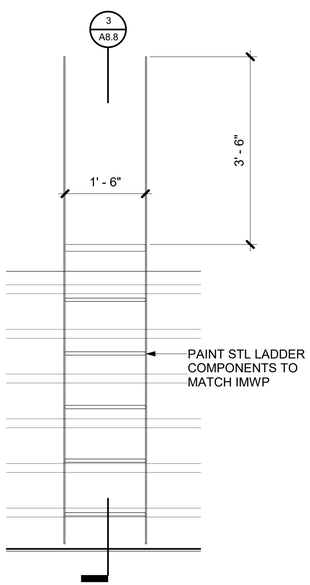

4 ENTRY ROOF LADDER ELEVATION
3/4" = 1'-0"

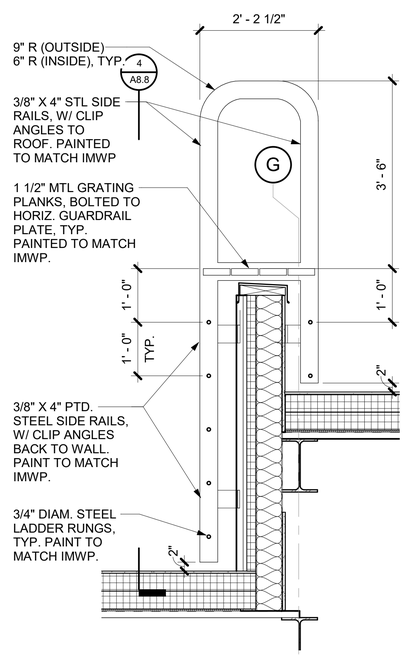

3 ENTRY ROOF ACCESS
3/4" = 1'-0"

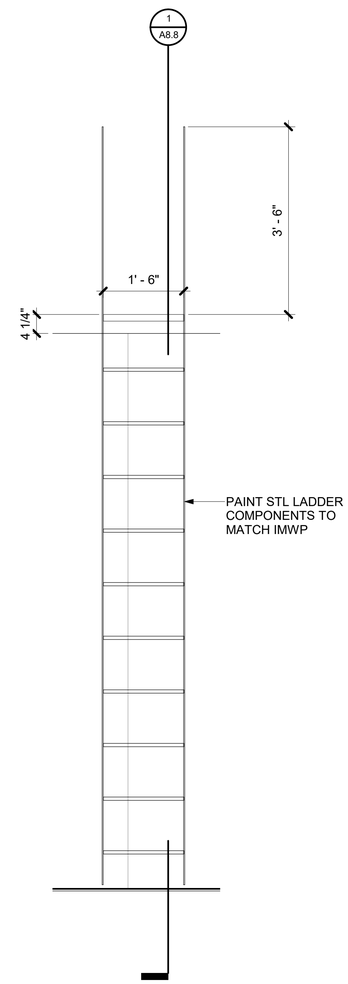

2 CONTROL ROOF LADDER ELEVATION
3/4" = 1'-0"

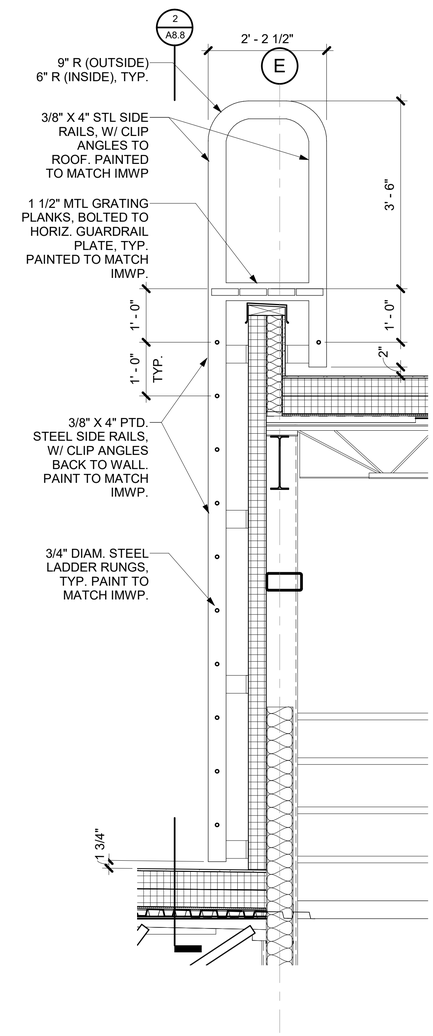

1 CONTROL ROOF ACCESS
3/4" = 1'-0"

STATE OF ALASKA
49TH
DAVE JAMES DREHER
A-14794
Registered Professional Architect
5/9/18

Burkhart Croft
ARCHITECTS LLC
880 N Street Suite 302 | Anchorage Alaska 99501
T: 907.929.9334 | www.burkhart-croft.com

MATANUSKA-SUSITNA BOROUGH

MSB FIRE STATION 6-2

WASILLA, ALASKA

DATE: 5/9/2018
DRAWN: TOS
CHECKED: DJD
PROJECT: 1725
DRAWING TITLE: LADDER DETAILS
REVISIONS:
SHEET NO:
A8.8

ABBREVIATIONS

AB	ANCHOR BOLT
ACI	AMERICAN CONCRETE INSTITUTE
AISC	AMERICAN INST. OF STEEL CONSTRUCTION
AISI	AMERICAN IRON AND STEEL INSTITUTE
ALT	ALTERNATE
ARCH	ARCHITECTURAL
ASTM	AMERICAN SOCIETY FOR TESTING & MATERIALS
AWS	AMERICAN WELDING SOCIETY
BOC	BOTTOM OF CONCRETE
BOD	BOTTOM OF DECKING
BOS	BOTTOM OF STEEL
BOT	BOTTOM
CBF	CONCENTRIC BRACED FRAME
CJP	COMPLETE JOINT PENETRATION
CLR	CLEAR. CLEARANCE
COL	COLUMN
CMP	CORRUGATED METAL PIPE
CONN	CONNECTION
CS	COLUMN STRIP
CVN	CHARPY V-NOTCH
CY	CUBIC YARD
DIAA	DRILLED IN ADHESIVE ANCHOR
DIAM	DIAMETER
DIWA	DRILLED IN WEDGE ANCHOR
DO	DITTO
do	DITTO
DWGS	DRAWINGS
E	EAST
(E)	EXISTING
EA	EACH
EL	ELEVATION
ELEC	ELECTRICAL
ELEV	ELEVATION, ELEVATOR
EXP	EXPOSURE
F'c	CONCRETE COMP. STRENGTH
F'm	CONCRETE MASONRY COMP. STRENGTH
FDN	FOUNDATION
FT	FEET
FTG	FOOTING
GA	GAGE OR GAUGE
GALV	GALVANIZED
GEN	GENERAL
HI	HIGH
HORIZ	HORIZONTAL
HS	HEADED STUD
HSH	HORIZONTAL SLOTTED HOLE
HSS	HOLLOW STRUCTURAL SECTION
IE	INVERT ELEVATION
IN	INCHES
INV	INVERT
LO	LOW
LS	LANDSCAPE
LVF	LOW VELOCITY FASTENER
LVL	LEVEL
MAX	MAXIMUM
MECH	MECHANICAL
MF	MOMENT FRAME
MIN	MINIMUM
MPH	MILES PER HOUR
MS	MIDDLE STRIP
MT	MAGNETIC PARTICLE TEST
(N)	NEW
N	NORTH
NA	NOT APPLICABLE
NFS	NON FROST SUSCEPTIBLE
NIC	NOT IN CONTRACT
NTS	NOT TO SCALE
OC	ON CENTER
PDF	POWER DRIVEN FASTENER
PEN	PENETRATION
PLF	POUNDS PER LINEAR FOOT
PSF	POUNDS PER SQUARE FOOT
PSI	POUNDS PER SQUARE INCH
REINF	REINFORCE. REINFORCING
RT	RADIOGRAPHIC TEST
S	SOUTH
SDI	STEEL DECK INSTITUTE
SJ	SEISMIC JOINT
SJRO	SEISMIC JOINT ROUGH OPENING
SQ	SQUARE
STD	STANDARD
TEMP	TEMPERATURE
TOC	TOP OF CONCRETE
TOS	TOP OF STEEL
TS	TUBE STEEL
TYP	TYPICAL
UNO	UNLESS NOTED OTHERWISE
UT	ULTRASONIC
VERT	VERTICAL
W	WIDE FLANGE DESIGNATION, WEST
WF	WIDE FLANGE
WHS	WELDED HEADED STUD
WP	WATER PROOFING. WORK POINT
WWF	WELDED WIRE FABRIC
W/	WITH

STRUCTURAL DESIGN CRITERIA SCHEDULE

CRITERIA	DESCRIPTION	VALUE	COMMENTS
CODE	IBC 2012		
SEISMIC	ANALYSIS PROCEDURE	ELF MODAL RESPONSE SPECTRUM ANALYSIS	PER ASCE 7-10
	SEISMIC DESIGN CATEGORY	F	
	OCCUPANCY CATEGORY	IV	
	SEISMIC IMPORTANCE FACTOR, IE	1.5	
	SITE CLASS	D	
	0.2S SPECTRAL RESPONSE ACCELERATION, Ss	1.6	
	1.0S SPECTRAL RESPONSE ACCELERATION, S1	0.8	
	0.2S SPECTRAL RESPONSE ACCELERATION, Sds	1.06	
	1.0S SPECTRAL RESPONSE ACCELERATION, Sd1	0.8	
FIRE STATION	RESPONSE MODIFICATION FACTOR, R	5	SPECIAL MOMENT FRAMES
	OMEGA	VARIES	SPECIAL MASONRY SHEAR WALLS
	RELIABILITY/REDUNDANCY	1.3	SPECIAL CONCENTRICALLY BRACED FRAME
	Cs (STRENGTH DESIGN)	0.319	
	V (STRENGTH DESIGN)	419 KIPS	
CANOPY	RESPONSE MODIFICATION FACTOR, R	1.25	CANTILEVERED COLUMN SYSTEM DETAILED TO CONFORM TO THE REQUIREMENTS FOR ORDINARY STEEL MOMENT FRAMES
	OMEGA	1.25	
	RELIABILITY/REDUNDANCY	1.3	
	Cs (STRENGTH DESIGN)	1.277	
	V (STRENGTH DESIGN)	85.5 KIPS	
WIND	IBC SECTION 1609		
	WIND SPEED (3 SECOND GUST)	130 MPH	PER ASCE 7-10 BASIC WIND SPEED MAP
	EXPOSURE FACTOR	B	
	INTERNAL PRESSURE COEFFICIENT, GCpi	±0.18	ENCLOSED BUILDING
COMP. & CLADDING PRESSURES		10 Ft^2 / 100 Ft^2	WIND PRESSURES SHOWN ARE ALLOWABLE LOADS. VALUES MAY BE NEGATIVE OR POSITIVE VALUES MAY BE INTERPOLATED BETWEEN 10 SQFT AND 100 SQFT ASD WIND FORCES ZONE 5 EXISTS FOR WALLS WITHIN 10-FT OF WALL CORNERS
	ROOF — INTERIOR-ZONE 1	19 PSF / 17 PSF	
	ROOF — END-ZONE 2	30 PSF / 20 PSF	
	ROOF — CORNER -ZONE 3	46 PSF / 20 PSF	
	WALL — INTERIOR -ZONE 4	18 PSF / 16 PSF	
	WALL — END -ZONE 5	23 PSF / 18 PSF	
ROOF LIVE LOADS - FIRE STATION	GROUND SNOW LOAD	60 PSF	
	SNOW LOAD EXPOSURE FACTOR	1.0	
	THERMAL FACTOR Ct	1.0	
	SNOW IMPORTANCE FACTOR	1.2	
	FLAT ROOF SNOW LOAD	50 PSF	
	SNOW DRIFT LOADS	PER ASCE 7-10	
FLOOR LIVE LOADS	APPARATUS BAY & MAINTENANCE BAY SLABS	250 PSF	AASHTO HS-20 WHEEL LOAD
	MEZZANINE SLAB ON STEEL DECK	125 PSF	
FOUNDATIONS	ALLOWABLE SOIL BEARING PRESSURE	3500 PSF	PER HDL GEOTECHINCAL REPORT DATED 11/23/16

SCHEDULE OF CONSTRUCTION MATERIALS

	LOCATION	28-DAY STRENGTH	MAX. W/C RATIO	AIR ENTRAINMENT
CONCRETE	EXTERIOR CONCRETE (EXPOSED TO FREEZING)	4,500 P.S.I.	0.45	6% +/- 1%
	INTERIOR SLABS (NOT EXPOSED TO FREEZING)	4,000 P.S.I.	0.45	3%
	FOOTINGS, FOUNDATION WALLS	4,000 P.S.I.	0.50	5% +/- 1%
	SLAB ON METAL DECK	3,000 P.S.I.	0.45	3%

	ITEM	TYPE	COMP. STRENGTH	SLUMP
MASONRY	CONCRETE MASONRY UNITS	ASTM C90 GRADE N-1	1,900 P.S.I.	
	MORTAR	TYPE S OR N	1,800 P.S.I.	
	GROUT	COURSE (PEA GRAVEL)	2,500 P.S.I.	8-10 INCHES

	APPLICATION	TYPE	COMMENTS
REINFORCING	FABRICATED AND STRAIGHT BARS	ASTM A615, GRADE 60	SEE LAP SPLICE SCHEDULE FOR LAP LENGTHS
	FIELD BENT	ASTM A615, GRADE 40	

	APPLICATION	TYPE	GRADE	Fy
STRUCTURAL STEEL	WIDE-FLANGE BEAMS AND COLUMNS	ASTM A992	GRADE 50	50 KSI
	TUBE COLUMNS	ASTM A500	GRADE C	46 KSI
	CHANNELS, ANGLES AND OTHER SHAPES	ASTM A36		36 KSI
	PLATES: BASE, CONTINUITY, END,STIFFENERS	ASTM A572		50 KSI
	MISCELLANEOUS PLATES AND BARS	ASTM A36		36 KSI
	PIPE	ASTM A53	GRADE B	35 KSI
	STRUCTURAL BOLTS	ASTM A325		
	ANCHOR RODS	ASTM F1554	GRADE 55 and 105	

	APPLICATION	PROFILE/SIZE	TYPE	GRADE	GALV
LIGHT GAGE STEEL	COMPOSITE DECK	1 1/2" TYPE B	ASTM A653	GRADE 33	G60
	EXTERIOR STL STUDS	6" x 1 5/8" x 18 GA.	ASTM A653	GRADE 33	G60

DEFERRED SUBMITTALS

DEFERRED SUBMITTAL ITEMS SHALL BE REVIEWED BY THE EOR.

THE CONTRACTOR SHALL BE RESPONSIBLE FOR SUBMITTING CALCULATION AND DRAWINGS STAMPED BY AN ALASKA REGISTERED PROFESSIONAL ENGINEER FOR THE FOLLOWING CONTRACTOR DESIGNED ITEMS:

- SEISMIC RESTRAINT OF ARCHITECTURAL, MECHANICAL AND ELECTRICAL COMPONENTS
- STEEL FABRICATOR CERTIFICATE OF COMPLIANCE
- STEEL DECKING ATTACHMENT
- EXTERIOR NON BEARING METAL STUDS
- ROOFING ATTACHMENT
- OPEN WEB STEEL JOISTS

STRUCTURAL NOTES
ALL MATERIALS, WORKMANSHIP AND CONSTRUCTION METHODS SHALL BE IN ACCORDANCE WITH THE STRUCTURAL DRAWINGS, THE SPECIFICATIONS AND NOTES LISTED BELOW. MINIMUM PROVISIONS OF THE INTERNATIONAL BUILDING CODE (IBC 2012), AND LOCAL AMENDMENTS SHALL APPLY WHERE DETAILS ARE NOT SHOWN OR DESCRIBED.

STRUCTURAL OBSERVATIONS
THE OWNER SHALL EMPLOY THE ENGINEER OF RECORD TO PERFORM STRUCTURAL OBSERVATIONS AS DEFINED IN SECTION 1702 OF THE IBC AT SIGNIFICANT STAGES AND AT COMPLETION OF THE STRUCTURAL SYSTEM. STRUCTURAL OBSERVATION DOES NOT INCLUDE OR WAIVE THE RESPONSIBILITY OF SPECIAL INSPECTIONS REQUIRED BY SECTION 1704 OF THE CODE.

AS-BUILT DRAWINGS
CONTRACTOR SHALL MAINTAIN A CURRENT SET OF DRAWINGS ON SITE, MODIFIED TO REFLECT ALL DESIGN CHANGES TO THE ORIGINAL DRAWING SET.

PND ENGINEERS INC IS NOT RESPONSIBLE FOR SAFETY PROGRAMS, METHODS, OR PROCEDURES OF OPERATION, OR THE CONSTRUCTION OF THE DESIGN SHOWN ON THESE DRAWINGS. DRAWINGS ARE FOR USE ON THIS PROJECT ONLY AND ARE NOT INTENDED FOR REUSE WITHOUT WRITTEN APPROVAL FROM PND. DRAWINGS ARE ALSO NOT TO BE USED IN ANY MANNER THAT WOULD CONSTITUTE A DETRIMENT DIRECTLY OR INDIRECTLY TO PND.

STATE OF ALASKA
49 TH
F. Charles Kenley
SE-14476
5-09-18
REGISTERED PROFESSIONAL ENGINEER

Burkhart Croft ARCHITECTS LLC
880 N Street Suite 302 | Anchorage Alaska 99501
T: 907.929.9334 | www.burkhart-croft.com

PND ENGINEERS, INC.
1506 WEST 36th AVENUE
ANCHORAGE, AK, 99503
PH 907.561.1011
WWW.PNDENGINEERS.COM

MATANUSKA-SUSITNA BOROUGH
MSB FIRE STATION 6-2
WASILLA, ALASKA

DATE: 5/09/18
DRAWN: DNB
CHECKED: CK
PROJECT: 171121
DRAWING TITLE: DESIGN CRITERIA
REVISIONS:
SHEET NO:
S1.0

STATEMENT OF SPECIAL INSPECTIONS

THE FOLLOWING SPECIAL INSPECTIONS SHALL BE PERFORMED BY QUALIFIED PERSONNEL EMPLOYED BY THE OWNER OR THE REGISTERED DESIGN PROFESSIONAL IN RESPONSIBLE CHARGE ACTING AS THE OWNER'S AGENT.

SPECIAL INSPECTOR QUALIFICATIONS:
THE SPECIAL INSPECTOR SHALL PROVIDE WRITTEN DOCUMENTATION

INSPECTION TASKS:
INSPECTION TASKS ARE LISTED IN THE ATTACHED TABLES AND IN THE 2012 EDITION OF THE IBC CHAPTER 17.

FABRICATOR APPROVAL:
SPECIAL INSPECTIONS REQUIRED BY SECTION 1705 ARE NOT REQUIRED WHERE THE WORK IS DONE ON THE PREMISES OF A FABRICATOR REGISTERED AND APPROVED TO PERFORM SUCH WORK WITHOUT SPECIAL INSPECTION (IBC 1704.2.5.2). HOWEVER, NON DESTRUCTIVE TESTING REQUIREMENTS CANNOT BE WAIVED PER AISC 360-10 SECTION N7. THE CONTRACTOR'S FABRICATOR SHALL PERFORM OR ENGAGE QUALIFIED A TESTING AGENCY TO PERFORM REQUIRED TESTING ON THE PREMISES OF THE FABRICATOR. TESTING DOCUMENTATION SHOWING COMPLIANCE SHALL BE SUBMITTED TO THE OWNER UPON COMPLETION OF TESTING.

REPORT REQUIREMENTS:
REPORTS SHALL BE COMPLETED ON A DAILY BASIS AND DISTRIBUTED ON A WEEKLY BASIS. COPIES OF REPORTS SHALL BE DISTRIBUTED TO THE GENERAL CONTRACTOR, THE ENGINEER OF RECORD AND THE ARCHITECT OF RECORD. REPORTS SHALL INDICATE WHETHER THE WORK WAS OR WAS NOT COMPLETED IN CONFORMANCE WITH THE CONSTRUCTION DOCUMENTS. DISCREPANCIES SHALL BE IMMEDIATELY BROUGHT TO THE ATTENTION OF THE GENERAL CONTRACTOR. IF THEY ARE NOT CORRECTED, DISCREPANCIES SHALL BE BROUGHT TO THE ATTENTION OF THE REGISTERED DESIGN PROFESSIONAL IN RESPONSIBLE CHARGE.
A FINAL REPORT DOCUMENTING THE SPECIAL INSPECTIONS PERFORMED AND THE CORRECTION OF ANY DISCREPANCIES SHALL BE DISTRIBUTED AS NOTED ABOVE.

STRUCTURAL OBSERVATIONS:
THE OWNER SHALL EMPLOY THE REGISTERED DESIGN PROFESSIONAL TO PERFORM STRUCTURAL OBSERVATIONS.

LEVEL B REQUIRED VERIFICATION AND INSPECTION OF MASONRY

	VERIFICATION AND INSPECTION TASK	FREQUENCY OF INSPECTION	REFERENCE FOR CRITERIA	
	VERIFICATION OF SLUMP FLOW AND VSI AS DELIVERED TO THE SITE FOR SELF-CONSOLIDATING GROUT			ART. 1.5B.1.b.3b
	VERIFICATION OF fm AND facc PRIOR TO CONSTRUCTION EXCEPT WHERE SPECIFICALLY EXEMPTED BY CODE			ART. 1.4 B
1	VERIFY COMPLIANCE WITH THE APPROVED SUBMITTALS	PERIODIC		ART. 1.5
2	AS MASONRY CONSTRUCTION BEGINS, THE FOLLOWING SHALL BE VERIFIED TO ENSURE COMPLIANCE			
	a. PROPORTIONS OF SITE-PREPARED MORTAR	PERIODIC		ART. 2.1, 2.6A
	b. CONSTRUCTION OF MORTAR JOINTS	PERIODIC		ART. 3.3B
	c. GRADE AND SIZE OF PRESTRESSING TENDONS AND ANCHORAGES	PERIODIC		ART. 2.4 B, 2.4 H
	d. LOCATION OF REINFORCEMENT, CONNECTORS AND ANCHORAGES	PERIODIC		ART. 3.4, 3.6A
	e. PRESTRESSING TECHNIQUE	PERIODIC		ART. 3.6 B
	f. PROPERTIES OF THIN-BED MORTAR FOR ACC MASONRY	PERIODIC		ART. 2.1 C
3	PRIOR TO GROUTING, THE FOLLOWING SHALL BE VERIFIED TO ENSURE COMPLIANCE			
	a. GROUT SPACE IS CLEAN	PERIODIC		ART. 3.2D, 3.2 F
	b. GRADE, TYPE AND SIZE OF REINFORCEMENT AND ANCHOR BOLTS, AND PRESTRESSING TENDONS AND ANCHORAGES	PERIODIC	SEC. 1.16	ART. 2.4, 3.4
	c. PLACEMENT OF REINFORCING AND CONNECTORS, AND ANCHORAGES	PERIODIC	SEC. 1.16	ART. 3.2 E, 3.4, 3.6A
	d. PROPORTIONS OF SITE-PREPARED GROUT	PERIODIC		ART. 2.6B, 2.4 G.1.b
	e. CONSTRUCTION OF MORTAR JOINTS	PERIODIC		ART. 3.3B
4	DURING CONSTRUCTION THE INSPECTION PROGRAM SHALL VERIFY:			
	a. SIZE AND LOCATION OF STRUCTURAL ELEMENTS	PERIODIC		ART. 3.3F
	b. TYPE,SIZE AND LOCATION OF ANCHORS, INCLUDING OTHER DETAILS OF ANCHORAGE OF MASONRY TO STRUCTURAL MEMBERS, FRAMES OR OTHER CONSTRUCTION	PERIODIC	SEC. 1.16.4.3, 1.17.1	
	c. WELDING OF REINFORCING BARS	CONTINUOUS	SEC. 2.1.9.7.2, 3.3.3.4(c) 8.3.3.4(b)	
	d. PREPARATION, CONSTRUCTION AND PROTECTION OF MASONRY DURING COLD WEATHER (TEMPERATURE BELOW 40 DEGREES F) OR HOT WEATHER	PERIODIC		ART. 1.8C, 1.8D
	e. APPLICATION OF PRESTRESSING FORCE	CONTINUOUS		ART. 3.6 B
	f. PLACEMENT OF GROUT AND PRESTRESSING GROUT FOR BONDED TENDONS IS IN COMPLIANCE	CONTINUOUS		ART. 3.5, 3.6 C
	g. PLACEMENT OF ACC MASONRY UNITS AND CONSTRUCTION OF THIN-BED MORTAR JOINTS	CONTINUOUS		ART. 3.3 B.8
5	PREPARATION OF ANY REQUIRED GROUT SPECIMENS, MORTAR SPECIMENS AND/OR PRISMS SHALL BE OBSERVED	PERIODIC		ART. 1.4B.2.a.3, 1.4 B.2.b.3, 1.4 B.2.c.3, 1.4 B.3, 1.4 B.4

REQUIRED INSPECTION OF SOILS

	VERIFICATION AND INSPECTION TASK	FREQUENCY OF INSPECTION	REMARKS
	VERIFY MATERIALS BELOW SHALLOW FOUNDATIONS ARE ADEQUATE TO ACHIEVE THE DESIGN BEARING CAPACITY	PERIODIC	
2	VERIFY EXCAVATIONS EXTEND TO PROPER DEPTH AND HAVE REACHED PROPER MATERIAL.	PERIODIC	
3	PERFORM CLASSIFICATION AND TESTING OF FILL MATERIALS.	PERIODIC	
4	VERIFY USE OF PROPER MATERIALS, DENSITIES AND LIFT THICKNESS DURING PLACEMENT AND COMPACTION OF COMPACTED FILL	CONTINUOUS	
5	PRIOR TO PLACEMENT OF COMPACTED FILL, OBSERVE SUBGRADE AND VERIFY THAT THE SITE HAS BEEN PREPARED PROPERLY.	PERIODIC	

REQUIRED VERIFICATION AND INSPECTION OF CONCRETE

	VERIFICATION AND INSPECTION TASK	FREQUENCY OF INSPECTION	REFERENCE FOR CRITERIA	
			REF. STANDARD	IBC REFERENCE
1	INSPECTION OF REINFORCING STEEL, INCLUDING PRESTRESSING TENDONS, AND PLACEMENT	PERIODIC	ACI 318: 3.5, 71. -7.7	1910.4
2	INSPECTION OF REINFORCING STEEL WELDING IN ACCORDANCE WITH TABLE 1705.2.2, ITEM 2b		AWS D1.4 ACI 318: 3.5.2	
3	INSPECTION OF ANCHORS CAST IN CONCRETE WHERE ALLOWABLE LOADS HAVE BEEN INCREASED OR WHERE STRENGTH DESIGN IS USED	PERIODIC	ACI 318: 8.1.3, 21.2.8	1908.5, 1909.1
4	INSPECTION OF ANCHORS POST INSTALLED IN HARDENED CONCRETE MEMBERS	PERIODIC	ACI 318: 3.8.6, 8.1.3, 21.2.8	1909.1
5	VERIFY USE OF REQUIRED MIX DESIGN	PERIODIC	ACI 318: 4, 5.2-5.4	1904.3, 1910.2, 1910.3
6	AT THE TIME FRESH CONCRETE IS SAMPLED TO FABRICATE SPECIMENS FOR STRENGTH TESTS, PERFORM SLUMP AND AIR CONTENT TESTS, AND DETERMINE THE TEMPERATURE OF THE CONCRETE	CONTINUOUS	ASTM C172 ASTM C31 ACI 318: 5.6, 5.8	1910.10
7	INSPECTION OF CONCRETE PLACEMENT FOR PROPER APPLICATION TECHNIQUES	CONTINUOUS	ACI 318: 5.9, 5.10-5.4	1910.6, 1910.7, 1910.8
8	INSPECTION FOR MAINTENANCE OF SPECIFIED CURING TECHNIQUES	PERIODIC	ACI 318: 5.11-5.13	1910.9
9	INSPECTION OF PRESTRESSED CONCRETE:			
	a. APPLICATION OF PRESTRESSING FORCES.	CONTINUOUS	ACI 318: 18.2	
	b. GROUTING OF BONDED PRESTRESSING TENDONS IN THE SEISMIC FORCE-RESISTING SYSTEM.	CONTINUOUS	ACI 318: 18.18.4	
10	ERECTION OF PRECAST CONCRETE MEMBERS VERIFICATION OF IN-SITU CONCRETE STRENGTH PRIOR TO STRESSING OF TENDONS IN POST-TENSIONED CONCRETE AND PRIOR TO THE REMOVAL OF FORMS AND SHORING FROM SLABS AND BEAMS	PERIODIC	ACI 318: CHP 16	
11	INSPECT FORMWORK FOR SHAPE, LOCATION AND DIMENSIONS OF THE CONCRETE MEMBER BEING FORMED	PERIODIC	ACI 318: 6.11	

SPECIAL INSPECTION FOR WIND RESISTANCE

	VERIFICATION AND INSPECTION TASK	FREQUENCY OF INSPECTION	REMARKS
1	STRUCTURAL WOOD: NAILING, BOLTING, ANCHORING AND FASTENING OF WOOD SHEAR WALLS, DRAG STRUTS, HOLDOWNS AND DIAPHRAGMS.	PERIODIC	
2	COLD-FORMED STEEL IN LIGHT-FRAME CONSTR.: NAILING, BOLTING, ANCHORING AND FASTENING OF COMPONENTS WITHIN THE MAIN WIND-FORCE RESISTING SYSTEM INCLUDING SHEAR WALLS, DIAPHRAGMS, DRAG STRUTS, BRACES, AND HOLDOWNS.	PERIODIC	
3	ARCHITECTURAL COMPONENTS: ROOF AND WALL CLADDING.	PERIODIC	

SPECIAL INSPECTION FOR SEISMIC RESISTANCE

	VERIFICATION AND INSPECTION TASK	FREQUENCY OF INSPECTION	REMARKS
1	STRUCTURAL WOOD: NAILING, BOLTING, ANCHORING AND FASTENING OF WOOD SHEAR WALLS, DRAG STRUTS, HOLDOWNS AND DIAPHRAGMS.	PERIODIC	
2	COLD-FORMED STEEL IN LIGHT-FRAME CONSTR.: NAILING, BOLTING, ANCHORING AND FASTENING OF COMPONENTS WITHIN THE MAIN WIND-FORCE RESISTING SYSTEM INCLUDING SHEAR WALLS, DIAPHRAGMS, DRAG STRUTS, BRACES, AND HOLDOWNS.	PERIODIC	
3	ARCHITECTURAL COMPONENTS: ROOF AND WALL CLADDING. INTERIOR AND EXTERIOR NON-BEARING WALLS. INTERIOR AND EXTERIOR VENEER SYSTEMS.	PERIODIC	
4	STRUCTURAL STEEL: IN ACCORDANCE WITH THE QUALITY ASSURANCE PLAN REQUIREMENTS OF AISC 341. SEE ATTACHED SCHEDULES.	PERIODIC	

STATE OF ALASKA
49 TH
F. Charles Kenley
SE-14476
5-09-18
REGISTERED PROFESSIONAL ENGINEER

Burkhart Croft ARCHITECTS LLC
880 N Street Suite 302 | Anchorage Alaska 99501
T: 907.929.9334 | www.burkhart-croft.com

PND ENGINEERS, INC.
1506 WEST 36th AVENUE
ANCHORAGE, AK, 99503
PH 907.561.1011
WWW.PNDENGINEERS.COM

MATANUSKA-SUSITNA BOROUGH

MSB FIRE STATION 6-2

WASILLA, ALASKA

DATE: 5/09/18
DRAWN: DNB
CHECKED: CK
PROJECT: 171121
DRAWING TITLE: SPECIAL INSPECTIONS
REVISIONS:
SHEET NO: **S1.1**

AISC 360 - STRUCTURAL STEEL - INSPECTION OF HIGH-STRENGTH BOLTING

	VERIFICATION AND INSPECTION TASK	QA
1	**VISUAL INSPECTION TASKS PRIOR TO BOLTING**	
	MANUFACTURER'S CERTIFICATIONS AVAILABLE FOR FASTENER MATERIALS.	PERFORM
	FASTENERS MARKED IN ACCORDANCE WITH ASTM REQUIREMENTS.	OBSERVE
	PROPER FASTENERS SELECTED FOR THE JOINT DETAIL (GRADE, TYPE, BOLT LENGTH IF THREADS ARE TO BE EXCLUDED FROM THE SHEAR PLANE).	OBSERVE
	PROPER BOLTING PROCEDURE SELECTED FOR THE JOINT DETAIL	OBSERVE
	CONNECTING ELEMENTS, INCLUDING THE APPROPRIATE FAYING SURFACE CONDITION AND HOLE PREPARATION, IF SPECIFIED, MEET APPLICABLE REQUIREMENTS.	OBSERVE
	PRE-INSTALLATION VERIFICATION TESTING BY INSTALLATION PERSONNEL OBSERVED AND DOCUMENTED FOR FASTENER ASSEMBLIES AND METHODS USED.	OBSERVE
	PROPER STORAGE PROVIDED FOR BOLTS, NUTS, WASHERS AND OTHER FASTENER COMPONENTS.	OBSERVE
2	**VISUAL INSPECTION TASKS DURING BOLTING**	
	FASTENER ASSEMBLIES PLACED IN ALL HOLES AND WASHERS (IF REQUIRED) ARE POSITIONED AS REQUIRED.	OBSERVE
	JOINT BROUGHT TO THE SNUG TIGHT CONDITION PRIOR TO THE PRETENSIONING OPERATION.	OBSERVE
	FASTENER COMPONENT NOT TURNED BY THE WRENCH PREVENTED FROM ROTATING.	OBSERVE
	BOLTS ARE PRETENSIONED PROGRESSING SYSTEMATICALLY FROM THE MOST RIGID POINT TOWARDS THE FREE EDGES.	OBSERVE
3	**VISUAL INSPECTION TASKS AFTER BOLTING**	
	DOCUMENT ACCEPTED AND REJECTED CONNECTIONS	PERFORM

a. FOR SNUG-TIGHT JOINTS, PRE-INSTALLATION VERIFICATION AND TESTING AND MONITORING OF THE INSTALLATION IS NOT REQUIRED.
b. FOR PRETENSIONED JOINTS AND SLIP-CRITICAL JOINTS, WHEN THE INSTALLER IS USING THE TURN-OF-THE-NUT METHOD WITH MATCH MARKING, THE DIRECT-TENSION-INDICATOR METHOD, OR THE TWIST-OFF-TYPE TENSION CONTROL BOLT METHOD, THE QA INSPECTOR NEED NOT BE PRESENT DURING THE INSTALLATION OF FASTENERS.

REQUIRED VERIFICATION AND INSPECTION OF STEEL CONSTRUCTION OTHER THAN STRUCTURAL STEEL

	VERIFICATION AND INSPECTION TASK	FREQUENCY OF INSPECTION	REF. STANDARD	REMARKS
1	MATERIAL VERIFICATION OF COLD-FORMED STEEL DECK:			
	a. IDENTIFICATION MARKINGS TO CONFORM TO ASTM STANDARDS SPECIFIED IN THE APPROVED CONSTRUCTION DOCUMENTS	PERIODIC	APPLICABLE ASTM MATERIALS STANDARDS	
	b. MANUFACTURER'S CERTIFIED TEST REPORTS	PERIODIC		
2	INSPECTION OF WELDING:			
	a. COLD-FORMED STEEL DECK:			
	1) FLOOR AND ROOF DECK WELDS	PERIODIC	AWS D1.3	
	b. REINFORCING STEEL:			
	1) VERIFICATION OF WELDABILITY OF REINFORCING STEEL OTHER THAN ASTM A 706.	PERIODIC	AWS D1.4 ACI 318: SECTION 3.5.2	
	2) REINFORCING STEEL RESISTING FLEXURAL AND AXIAL FORCES IN INTERMEDIATE AND SPECIAL MOMENT FRAMES AND BOUNDARY ELEMENTS OF SPECIAL STRUCTURAL WALLS OF CONCRETE AND SHEAR REINFORCEMENT.	CONTINUOUS		
	3) SHEAR REINFORCEMENT.	CONTINUOUS		
	4) OTHER REINFORCING STEEL.	PERIODIC		

AISC 360 - STRUCTURAL STEEL - VISUAL WELDING INSPECTION

	VERIFICATION AND INSPECTION TASK	QA
1	**VISUAL INSPECTION TASKS PRIOR TO WELDING**	
	WELDING PROCEDURE SPECIFICATION (WPSs) AVAILABLE	PERFORM
	MANUFACTURER CERTIFICATIONS FOR WELDING CONSUMABLES AVAILABLE	PERFORM
	MATERIAL IDENTIFICATION (TYPE/GRADE)	OBSERVE
	WELDER IDENTIFICATION SYSTEM	OBSERVE
	FIT-UP OF GROOVE WELDS (INCLUDING JOINT GEOMETRY	OBSERVE
	-JOINT PREPARATION	
	-DIMENSIONS (ALIGNMENT, ROOT OPENING, ROOT FACE, BEVEL)	
	-CLEANLINESS (CONDITION OF STEEL SURFACE)	
	-TACKING (TACK WELD QUALITY AND LOCATION)	
	-BACKING TYPE AND FIT	
	CONFIGURATION AND FINISH OF ACCESS HOLES	OBSERVE
	FIT-UP OF FILLET WELDS	OBSERVE
	-DIMENSIONS (ALIGNMENT, GAPS AT ROOT)	
	-CLEANLINESS (CONDITION OF STEEL SURFACE)	
	-TACKING (TACK WELD QUALITY AND LOCATION)	
	CHECK WELDING EQUIPMENT	
2	**VISUAL INSPECTION TASKS DURING WELDING**	
	WPS FOLLOWED	OBSERVE
	-SETTINGS ON WELDING EQUIPMENT	
	-TRAVEL SPEED	
	-SELECTED WELDING MATERIALS	
	-SHIELDING GAS TYPE/FLOW RATE	
	-PREHEAT APPLIED	
	-INTERPASS TEMPERATURE MAINTAINED	
	-PROPER POSITION (F,V,H,OH)	
	-INTERMIX OF FILLER MATERIALS AVOIDED	
	USE OF QUALIFIED WELDERS	OBSERVE
	VISUAL INSPECTION TASKS DURING WELDING, CONTINUED.	
	CONTROL AND HANDLING OF WELDING MATERIALS	OBSERVE
	-PACKAGING	
	-EXPOSURE CONTROL	
	ENVIRONMENTAL CONDITIONS	OBSERVE
	-WIND SPEED WITHIN LIMITS	
	-PRECIPITATION AND TEMPERATURE	
	WELDING TECHNIQUES	OBSERVE
	-INTERPASS AND FINAL CLEANING	
	-EACH PASS WITHIN PROFILE LIMITS	
	-EACH PASS MEETS QUALITY REQUIREMENTS	
	NO WELDING OVER CRACKED TACKS	OBSERVE
3	**VISUAL INSPECTION TASKS AFTER WELDING**	
	WELDS CLEANED	OBSERVE
	SIZE, LENGTH AND LOCATION OF WELDS	PERFORM
	WELDS MEET VISUAL ACCEPTANCE CRITERIA	PERFORM
	-CRACK PROHIBITION	
	-WELD/BASE-METAL FUSION	
	-CRATER CROSS SECTION	
	-WELD PROFILE AND SIZE	
	-UNDERCUT	
	-POROCITY	
	k-AREA	PERFORM
	BACKING REMOVED, WELD TABS REMOVED (IF REQUIRED).	PERFORM
	REPAIR ACTIVITIES	PERFORM
	DOCUMENT ACCEPTANCE OR REJECTION OF WELDED JOINT OR MEMBER	PERFORM

AISC 360 - STRUCTURAL STEEL TESTING

CATEGORY	DESCRIPTION	NOTES
STEEL CONSTRUCTION NON-DESTRUCTIVE TESTING (NDT)	PROCEDURES	ULTRASONIC TESTING (UT), MAGNETIC PARTICLE TESTING (MT) , PENETRATE TESTING (PT) AND RADIOGRAPHIC TESTING (RT) AS REQUIRED BY THE SPECIFICATION (AISC 360-10 N5.5a).
	CJP GROOVE WELD NDT	FOR STRUCTURES IN RISK CATEGORY III AND IV, UT SHALL BE PERFORMED BY QA ON ALL CJP WELDS SUBJECT TO TRANSVERSELY APPLIED TENSION LOADING IN BUTT, T- AND CORNER JOINTS, IN MATERIALS 5/16" THICK OR GREATER. FOR STRUCTURES IN RISK CATEGORY II, UT SHALL BE PERFORMED BY QA ON 10% OF CJP WELDS SUBJECT TO TRANSVERSELY APPLIED TENSION LOADING IN BUTT, T- AND CORNER JOINTS, IN MATERIALS 5/16" THICK OR GREATER (AISC 360-10 N5.5b).
	ACCESS HOLE NDT	THERMALLY CUT SURFACES OF ACCESS HOLES SHALL BE TESTED BY QA USING MT OR PT, WHEN THE FLANGE THICKNESS EXCEEDS 2 IN. FOR ROLLED SHAPES, OR WHEN THE WEB THICKNESS EXCEEDS 2 IN. FOR BUILT-UP SHAPES (AISC 360-10 N5.5c).
	WELDED JOINTS SUBJECT TO FATIGUE	WHEN REQUIRED BY APPENDIX 3, TABLE A-3.1.

NOTE: SPECIAL INSPECTIONS REQUIRED BY SECTION 1705 ARE NOT REQUIRED WHERE THE WORK IS DONE ON THE PREMISES OF A FABRICATOR REGISTERED AND APPROVED TO PERFORM SUCH WORK WITHOUT SPECIAL INSPECTION (IBC 1704.2.5.2). HOWEVER, NON DESTRUCTIVE TESTING REQUIREMENTS CANNOT BE WAIVED PER AISC 360-10 SECTION N7. THE CONTRACTOR'S FABRICATOR SHALL PERFORM OR ENGAGE A QUALIFIED TESTING AGENCY TO PERFORM REQUIRED TESTING ON THE PREMISES OF THE FABRICATOR. TESTING DOCUMENTATION SHOWING COMPLIANCE SHALL BE SUBMITTED TO THE OWNER UPON COMPLETION OF TESTING.

STATE OF ALASKA 49TH
F. Charles Kenley
SE-1447
5.09.18
REGISTERED PROFESSIONAL ENGINEER

Burkhart Croft ARCHITECTS LLC
880 N Street Suite 302 | Anchorage Alaska 99501
T: 907.929.9334 | www.burkhart-croft.com

PND ENGINEERS, INC.
1506 WEST 36th AVENUE
ANCHORAGE, AK, 99503
PH 907.561.1011
WWW.PNDENGINEERS.COM

MATANUSKA-SUSITNA BOROUGH

MSB FIRE STATION 6-2

WASILLA, ALASKA

DATE: 5/09/18
DRAWN: DNB
CHECKED: CK
PROJECT: 171121
DRAWING TITLE: SPECIAL INSPECTIONS OF STEEL
REVISIONS:
SHEET NO: **S1.2**

AISC 341 SEISMIC FORCE RESISTING SYSTEMS - OTHER INSPECTIONS

	VERIFICATION AND INSPECTION TASK	QA/D
1	**OTHER INSPECTION TASKS**	
	PROTECTED ZONE -NO HOLES AND UNAPPROVED ATTACHMENTS MADE BY FABRICATOR OR ERECTOR, AS APPLICABLE.	PERFORM, DOCUMENT

SEISMIC FORCE RESISTING SYSTEMS

THE FOLLOWING ELEMENTS ARE PART OF THE DESIGNATED SEISMIC FORCE RESISTING SYSTEM AND ARE SUBJECT TO INSPECTION AND TESTING IN ACCORDANCE WITH THE ATTACHED SCHEDULES AND AISC 341.

- CONCRETE FOUNDATIONS
- STEEL DECK, CONCRETE FILLED STEEL DECK
- STRUCTURAL STEEL MOMENT FRAMES
- STRUCTURAL STEEL BRACED FRAMES
- COLLECTORS AND DRAGS STRUTS NOTED AS WXXxXX (C)

INSPECTION AND NONDESTRUCTIVE TESTING PERSONNEL:

- WELDING INSPECTIONS AND NDT SHALL BE CONDUCTED BY PERSONNEL QUALIFIED IN ACCORDANCE WITH AWS D1.8 CLAUSE 7.2. ULTRASONIC TECHNICIANS SHALL BE QUALIFIED IN ACCORDANCE WITH AWS D1.8 CLAUSE 7.2.4.

INSPECTION TASKS:

INSPECTION TASKS ARE LISTED IN THE ATTACHED TABLES AND IN AISC 341. THE FOLLOWING ENTRIES ARE LISTED TABLES.

- OBSERVE - INSPECTOR SHALL OBSERVE THESE FUNCTIONS ON A RANDOM DAILY BASIS. OPERATIONS NEED NOT BE DELAYED PENDING OBSERVATION.
- PERFORM - THESE INSPECTIONS SHALL BE PERFORMED PRIOR TO FINAL ACCEPTANCE.
- DOCUMENT - THE INSPECTOR SHALL PREPARE REPORTS INDICATING THAT THE WORK HAS BEEN PERFORMED IN ACCORDANCE WITH THE CONTRACT DOCUMENTS.

DISTRIBUTION OF REPORTS:

REPORTS SHALL BE COMPLETED ON A DAILY BASIS AND DISTRIBUTED ON A WEEKLY BASIS. COPIES OF REPORTS SHALL BE DISTRIBUTED TO THE GENERAL CONTRACTOR, THE ENGINEER OF RECORD AND THE ARCHITECT OF RECORD.

AISC 341 - SEISMIC FORCE RESISTING SYSTEMS - VISUAL WELDING INSPECTION

	VERIFICATION AND INSPECTION TASK	QA
1	**VISUAL INSPECTION TASKS PRIOR TO WELDING**	
	MATERIAL IDENTIFICATION (TYPE/GRADE)	OBSERVE
	FIT-UP OF GROOVE WELDS (INCLUDING JOINT GEOMETRY	OBSERVE
	-JOINT PREPARATION	
	-DIMENSIONS (ALIGNMENT, ROOT OPENING, ROOT FACE, BEVEL)	
	-CLEANLINESS (CONDITION OF STEEL SURFACE)	
	-TACKING (TACK WELD QUALITY AND LOCATION)	
	-BACKING TYPE AND FIT	
	CONFIGURATION AND FINISH OF ACCESS HOLES	OBSERVE
	FIT-UP OF FILLET WELDS	OBSERVE
	-DIMENSIONS (ALIGNMENT, GAPS AT ROOT)	
	-CLEANLINESS (CONDITION OF STEEL SURFACE)	
	-TACKING (TACK WELD QUALITY AND LOCATION)	
2	**VISUAL INSPECTION TASKS DURING WELDING**	
	WPS FOLLOWED	OBSERVE
	-SETTINGS ON WELDING EQUIPMENT	
	-TRAVEL SPEED	
	-SELECTED WELDING MATERIALS	
	-SHIELDING GAS TYPE/FLOW RATE	
	-PREHEAT APPLIED	
	-INTERPASS TEMPERATURE MAINTAINED	
	-PROPER POSITION (F,V,H,OH)	
	-INTERMIX OF FILLER MATERIALS AVOIDED	
	USE OF QUALIFIED WELDERS	OBSERVE

	VERIFICATION AND INSPECTION TASK	QA/D
	VISUAL INSPECTION TASKS DURING WELDING, CONTINUED.	
	CONTROL AND HANDLING OF WELDING MATERIALS	OBSERVE
	-PACKAGING	
	-EXPOSURE CONTROL	
	ENVIRONMENTAL CONDITIONS	OBSERVE
	-WIND SPEED WITHIN LIMITS	
	-PRECIPITATION AND TEMPERATURE	
	WELDING TECHNIQUES	OBSERVE
	-PACKAGING	
	-EXPOSURE CONTROL	
	NO WELDING OVER CRACKED TACKS	OBSERVE
	VISUAL INSPECTION TASKS AFTER WELDING	
3	WELDS CLEANED	OBSERVE
	SIZE, LENGTH AND LOCATION OF WELDS	PERFORM
	WELDS MEET VISUAL ACCEPTANCE CRITERIA	PERFORM, DOCUMENT
	-CRACK PROHIBITION	
	-WELD/BASE-METAL FUSION	
	-CRATER CROSS SECTION	
	-WELD PROFILE AND SIZE	
	-UNDERCUT	
	-POROSITY	
	PLACEMENT OF REINFORCING OR CONTOURING FILLET WELDS	PERFORM, DOCUMENT
	BACKING REMOVED, WELD TABS REMOVED AND FINISHED, AND FILLET WELDS ADDED (IF REQUIRED).	PERFORM, DOCUMENT
	REPAIR ACTIVITIES	PERFORM, DOCUMENT

AISC 341- STRUCTURAL STEEL NDS TESTING FOR SEISMIC RESISTANCE

CATEGORY	DESCRIPTION	NOTES
STEEL CONSTRUCTION NON-DESTRUCTIVE TESTING (NDT) (ALL NDT PERFORMED (SHOP OR FIELD) SHALL BE DOCUMENTED INCLUDING PIECE MARK, LOCATION, AND TEST REPORT.)	CJP WELDS	CJP GROOVE WELD NDT (AISC 341-10 J6.2b) ULTRASONIC TESTING (UT) SHALL BE PERFORMED ON 100 PERCENT OF CJP GROOVE WELDS IN MATERIALS 5/16 IN. THICK OR GREATER. MAGNETIC PARTICLE TESTING (MT) SHALL BE PERFORMED ON 25 PERCENT OF ALL BEAM-TO-COLUMN CJP GROOVE WELDS. EXCEPTION: FOR ORDINARY MOMENT FRAMES, UT AND MT OF CJP WELDS ARE ONLY REQUIRED FOR DEMAND CRITICAL WELDS.
	REDUCED BEAM SECTION (RBS) REPAIR	MAGNETIC PARTICLE TESTING SHALL BE PERFORMED ON ANY WELD AND ADJACENT AREA OF THE RBS CUTOUT THAT HAS BEEN REPAIRED BY WELDING, OR ON THE BASE METAL OF THE RBS CUTOUT IF A SHARP NOTCH HAS BEEN REMOVED BY GRINDING (AISC 341-10 J6.2e).
	k-AREA	TEST WEB USING MAGNETIC PARTICLE TESTING WITHIN 3" OF WELDED DOUBLER PLATES, CONTINUITY PLATES OR STIFFENERS (AISC 341-10 J6.2a)
	WELD TAB REMOVAL SITES	WELD TAB REMOVAL SITES NDT (AISC 341-10 J6.2f) MAGNETIC PARTICLE TESTING SHALL BE PERFORMED ON THE END OF WELDS FROM WHICH THE WELD TABS HAVE BEEN REMOVED.

NOTE: SPECIAL INSPECTIONS REQUIRED BY SECTION 1705 ARE NOT REQUIRED WHERE THE WORK IS DONE ON THE PREMISES OF A FABRICATOR REGISTERED AND APPROVED TO PERFORM SUCH WORK WITHOUT SPECIAL INSPECTION (IBC 1704.2.5.2). HOWEVER, NON DESTRUCTIVE TESTING REQUIREMENTS CANNOT BE WAIVED PER AISC 360-10 SECTION N7. THE CONTRACTOR'S FABRICATOR SHALL PERFORM OR ENGAGE A QUALIFIED TESTING AGENCY TO PERFORM REQUIRED TESTING ON THE PREMISES OF THE FABRICATOR. TESTING DOCUMENTATION SHOWING COMPLIANCE SHALL BE SUBMITTED TO THE OWNER UPON COMPLETION OF TESTING.

AISC 341 SEISMIC FORCE RESISTING SYSTEMS - INSPECTION OF HIGH-STRENGTH BOLTING

	VERIFICATION AND INSPECTION TASK	QA
1	**VISUAL INSPECTION TASKS PRIOR TO BOLTING**	
	PROPER FASTENERS SELECTED FOR THE JOINT DETAIL	OBSERVE
	PROPER BOLTING PROCEDURE SELECTED FOR THE JOINT DETAIL	OBSERVE
	CONNECTING ELEMENTS, INCLUDING THE APPROPRIATE FAYING SURFACE CONDITION AND HOLE PREPARATION, IF SPECIFIED, MEET APPLICABLE REQUIREMENTS.	OBSERVE
	PRE-INSTALLATION VERIFICATION TESTING BY INSTALLATION PERSONNEL OBSERVED FOR FASTENER ASSEMBLIES AND METHODS USED.	OBSERVE
	PROPER STORAGE PROVIDED FOR BOLTS, NUTS, WASHERS AND OTHER FASTENER COMPONENTS.	OBSERVE

	VERIFICATION AND INSPECTION TASK	QA
2	**VISUAL INSPECTION TASKS DURING BOLTING**	
	FASTENER ASSEMBLIES PLACED IN ALL HOLES AND WASHERS (IF REQUIRED) ARE POSITIONED AS REQUIRED.	OBSERVE
	JOINT BROUGHT TO THE SNUG TIGHT CONDITION PRIOR TO THE PRETENSIONING OPERATION.	OBSERVE
	FASTENER COMPONENT NOT TURNED BY THE WRENCH PREVENTED FROM ROTATING.	OBSERVE
	BOLTS ARE PRETENSIONED PROGRESSING SYSTEMATICALLY FROM THE MOST RIGID POINT TOWARDS THE FREE EDGES.	OBSERVE
3	**VISUAL INSPECTION TASKS AFTER BOLTING**	
	DOCUMENT ACCEPTED AND REJECTED CONNECTIONS	PERFORM, DOCUMENT

STATE OF ALASKA
49 TH
F. Charles Kenley
SE-1447
5.09.18
REGISTERED PROFESSIONAL ENGINEER

Burkhart Croft
ARCHITECTS LLC
880 N Street Suite 302 | Anchorage Alaska 99501
T: 907.929.9334 | www.burkhart-croft.com

PND
ENGINEERS, INC.
1506 WEST 36th AVENUE
ANCHORAGE, AK, 99503
PH 907.561.1011
WWW.PNDENGINEERS.COM

MATANUSKA-SUSITNA BOROUGH

MSB FIRE STATION 6-2

WASILLA, ALASKA

DATE: 5/09/18

DRAWN: DNB

CHECKED: CK

PROJECT: 171121

DRAWING TITLE:
SPECIAL INSPECTIONS OF SEISMIC RESISTING SYSTEMS

REVISIONS:

SHEET NO:

S1.3

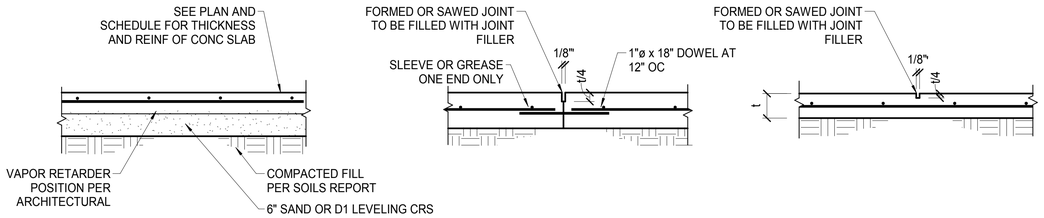

TYPICAL INTERIOR SLAB ON GRADE

TYPICAL SLAB CONSTRUCTION JOINTS

TYPICAL SLAB CONTROL JOINT

1 TYPICAL SLAB JOINT DETAILS
3/4" = 1'-0"

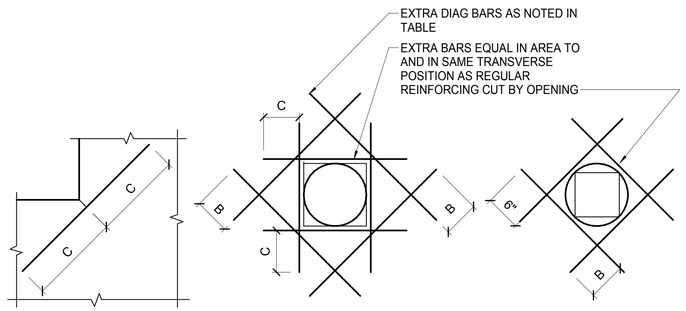

C=LAP SPLICE MIN
B=12" MIN
EXTRA BARS NOT REQUIRED AT SLEEVES OR WALL PIPES WHEN REINFORCING IS NOT CUT AND OPENING IS LESS THAN 10 INCH

EXTRA DIAG BARS	
CONCRETE THICKNESS	BAR SIZE
4"-7.99"	4
8"-9.99"	5
10"-11.99"	5 T&B
12"-18"	6 T&B

OPENINGS LARGER THAN 21" DIA

OPENINGS LESS THAN 21" DIA

RE-ENTRANT CORNERS

OPENING REINFORCING

2 TYPICAL CONC WALL OPENING REINFORCING
1" = 1'-0"

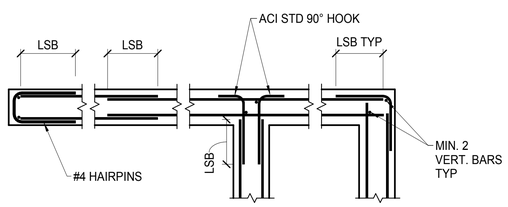

DOUBLE CURTAIN PLAN - 10" AND THICKER WALLS

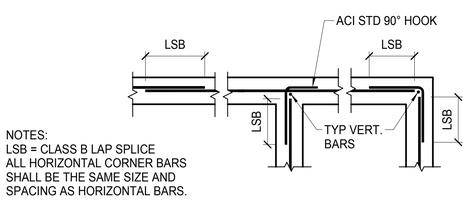

NOTES:
LSB = CLASS B LAP SPLICE
ALL HORIZONTAL CORNER BARS SHALL BE THE SAME SIZE AND SPACING AS HORIZONTAL BARS.

SINGLE CURTAIN PLAN - 8" WALLS

4 TYP WALL CORNER REINFORCING
3/4" = 1'-0"

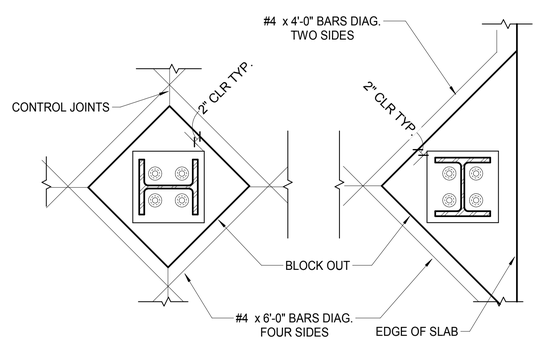

3 TYPICAL ISOLATION JOINTS AT COL
3/4" = 1'-0"

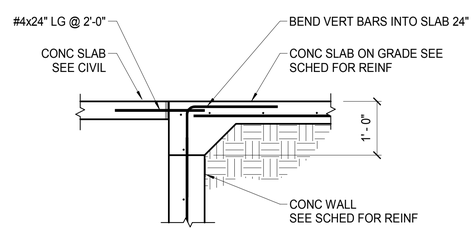

5 CONCRETE SLAB AT DOOR
3/4" = 1'-0"

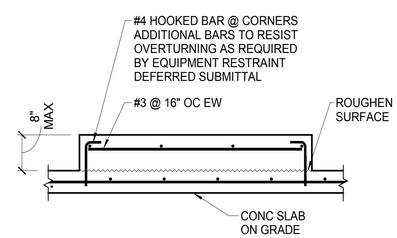

6 HOUSEKEEPING PAD
3/4" = 1'-0"

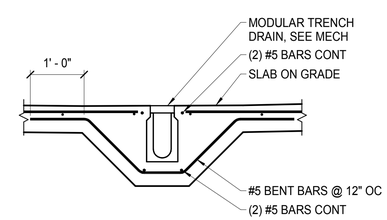

7 MODULAR TRENCH
3/4" = 1'-0"

SPREAD FOOTING REINFORCING SCHEDULE

MARK	FTG SIZE	FTG DEPTH	T.O.F. ELEV.	TOP MAT REINFORCING	BOTTOM MAT REINFORCING
F4	4'-0"x4'-0"	12"	SEE PLAN	-	(5) #5 EA. WAY
F5	5'-0"x5'-0"	18"	SEE PLAN	(6) #5 EA. WAY	(6) #5 EA. WAY
F6	6'-0"x6'-0"	18"	SEE PLAN	(8) #6 EA. WAY	(8) #6 EA. WAY
F7	7'-0"x7'-0"	18"	SEE PLAN	(9) #6 EA. WAY	(9) #6 EA. WAY
F8	8'-0"x8'-0"	24"	SEE PLAN	(10) #6 EA. WAY	(10) #6 EA. WAY
F9	9'-0"x9'-0"	24"	SEE PLAN	(11) #6 EA. WAY	(11) #6 EA. WAY
F10	10'-0"x10'-0"	24"	SEE PLAN	(12) #6 EA. WAY	(12) #6 EA. WAY

NOTES:

STRIP FOOTING REINFORCING SCHEDULE

MARK	FTG WIDTH	FTG DEPTH	T.O.F. ELEV.	LONGITUDINAL REINFORCING	TRANSVERSE REINFORCING
SF2	2'-0"	12"	SEE PLAN	(3) #5 AT MID HEIGHT	NONE

NOTES:

CONCRETE WALL REINFORCING SCHEDULE

MARK	THICKNESS	VERTICAL REINFORCING	HORIZONTAL REINFORCING	POSITION	REMARKS
C8	8"	#5 @ 16" OC	#5 @ 12" OC	CENTERED	TYPICAL CONCRETE STEM WALL
C12	12"	#5 @ 16" OC	#5 @ 12" OC	EA FACE	AT MOMENT FRAMES AND BRACED FRAMES
TC8	8"	#5 @ 12" OC	#5 @ 12" OC	CENTERED	TANK BAFFLE WALLS
TC12	12"	#5 @ 12" OC	#5 @ 12" OC	EA FACE	TANK WALLS

NOTE: CLEAR DISTANCE FROM FACE OF WALL SHALL BE 1 1/2" MINIMUM EXCEPT TANKI WALLS WHICH SHALL BE 2" MINIMUM.

SLAB REINFORCING SCHEDULE

THICKNESS	TYPE	REINFORCING	CONCRETE COVER	TANK LID SLAB REINFORCING
4"	ON GRADE	6"x6" W2.1xW2.1 WWM	1" FROM TOP	
7 1/4"	ON GRADE (VEHICULAR BAYS)	#4 @ 16" OC EACH WAY	2" FROM TOP	
10"	ON GRADE - TANK MAT SLAB	#5 @ 12" OC EACH WAY TOP & BOT	2" FROM TOP, 3" FROM BOT	
8"	STRUCTURAL - TANK LID	#5 @ 12" OC MAIN BARS TOP & BOT #4 @ 16" OC TEMP. BARS TOP & BOT	SEE DETAIL	
4"	COMPOSITE DECK	6"x6" W2.1xW2.1 WWM	1" FROM TOP	

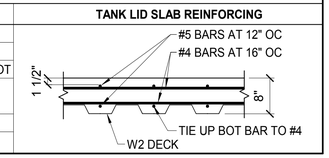

ACI STANDARD 90° HOOK DIMENSIONS

BAR SIZE	#3	#4	#5	#6	#7	#8
MIN. BEND DIAM. (d)	2 1/4"	3"	3 3/4"	4 1/2"	5 1/4"	6"
EXTENSION LENGTH (L)	6"	8"	10"	12"	14"	16"

NOTE: REFERENCE ACI 318-05 SEC. 7.1 & 12.5.4

LAP SPLICES

BAR SIZE	#3	#4	#5	#6	#7	#8
CLASS B SPLICE	28"	37"	47"	56"	81"	93"

NOTE: INCREASE TABULATED LAP LENGTH BY 20% FOR BUNDLES OF 3 BARS.

REINFORCING CLEARANCE/COVER

EXPOSURE CONDITION		MIN. COVER	TOLERANCE*
CAST AGAINST AND PERMANENTLY EXPOSED TO EARTH		3"	-3/8", +1"
EXPOSED TO EARTH OR WEATHER	#5 AND SMALLER BARS:	1 1/2"	-1/4", +1/2"
	#6 AND LARGER BARS:	2"	-1/4", +1/2"
NOT EXPOSED TO EARTH, WEATHER OR IN CONTACT WITH GROUND:		3/4"	-1/4", +3/8"
TIES AND STIRRUPS		1 1/2"	-1/4", +1/2"

NOTES: "-" INDICATES TOLERANCE DECREASE TOWARDS MEMBER FACE. "+" INDICATES AWAY FROM MEMBER FACE.

STATE OF ALASKA 49TH
F. Charles Kenley
SE-1447
5.09.18
REGISTERED PROFESSIONAL ENGINEER

Burkhart Croft ARCHITECTS LLC
880 N Street Suite 302 | Anchorage Alaska 99501
T: 907.929.9334 | www.burkhart-croft.com

PND ENGINEERS, INC.
1506 WEST 36th AVENUE
ANCHORAGE, AK, 99503
PH 907.561.1011
WWW.PNDENGINEERS.COM

MATANUSKA-SUSITNA BOROUGH

MSB FIRE STATION 6-2

WASILLA, ALASKA

DATE: 5/09/18
DRAWN: DNB
CHECKED: CK
PROJECT: 171121
DRAWING TITLE: CONCRETE REINFORCING SCHEDULES AND TYPICAL DETAILS
REVISIONS:
SHEET NO:

S1.4

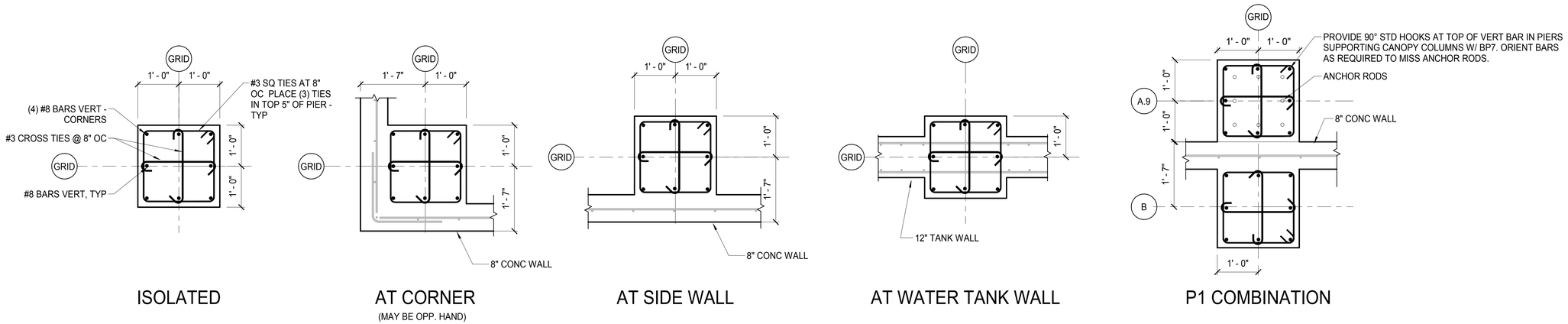

ISOLATED

AT CORNER
(MAY BE OPP. HAND)

AT SIDE WALL

AT WATER TANK WALL

P1 COMBINATION

1 CONCRETE PIER PLANS - P1 CONFIGURATIONS
3/4" = 1'-0"

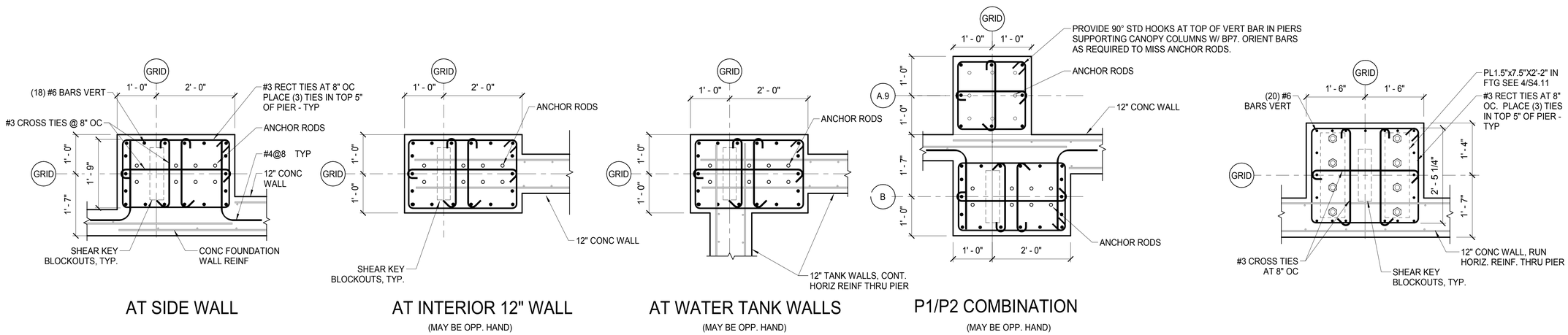

AT SIDE WALL

AT INTERIOR 12" WALL
(MAY BE OPP. HAND)

AT WATER TANK WALLS
(MAY BE OPP. HAND)

P1/P2 COMBINATION
(MAY BE OPP. HAND)

2 CONCRETE PIER PLANS - P2 CONFIGURATIONS
3/4" = 1'-0"

3 CONCRETE PIER PLAN P3
3/4" = 1'-0"

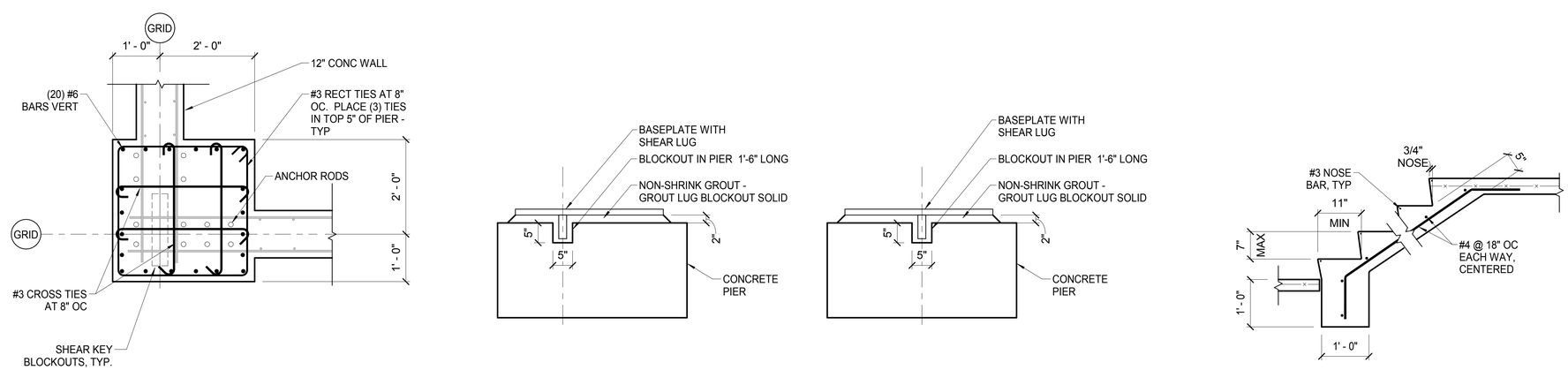

4 CONCRETE PIER PLAN P4
3/4" = 1'-0"

5 TOP OF PIER DETAIL AT SHEAR LUGS
3/4" = 1'-0"

6 TYPICAL CONCRETE STAIRS
3/4" = 1'-0"

STATE OF ALASKA
49 TH
F. Charles Kenley
SE-1447
5.09.18
REGISTERED PROFESSIONAL ENGINEER

Burkhart Croft
ARCHITECTS LLC
880 N Street Suite 302 | Anchorage Alaska 99501
T: 907.929.9334 | www.burkhart-croft.com

P N D
ENGINEERS, INC.
1506 WEST 36th AVENUE
ANCHORAGE, AK, 99503
PH 907.561.1011
WWW.PNDENGINEERS.COM

MATANUSKA-SUSITNA BOROUGH

MSB FIRE STATION 6-2

WASILLA, ALASKA

DATE:	5/09/18
DRAWN:	DNB
CHECKED:	CK
PROJECT:	171121
DRAWING TITLE:	CONCRETE PIER PLANS
REVISIONS:	2 FMC-002 4-24-2018
SHEET NO:	**S1.5**

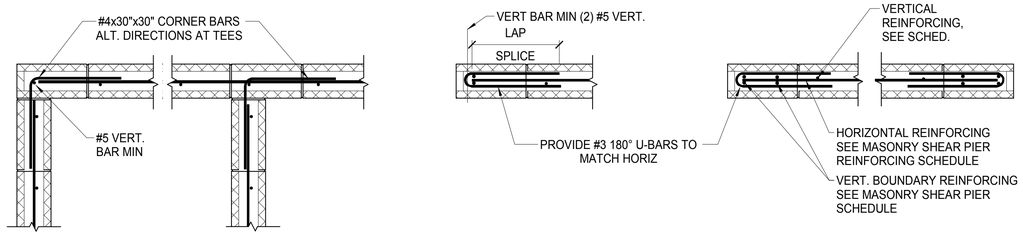

CORNERS **JAMB SECTIONS AND ENDS OF WALL** **SHEAR PIERS**

SINGLE CURTAIN PLAN - 8" WALLS

1 WALL CORNER AND END REINFORCING
3/4" = 1'-0"

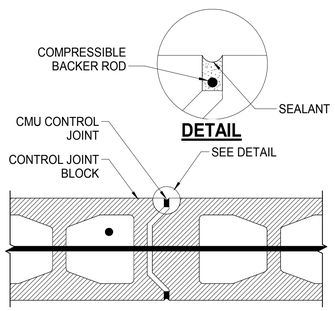

NOTE:
HORIZONTAL REINFORCING IS
CONTINUOUS ACROSS JOINT

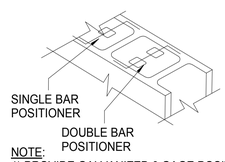

NOTE:
1) PROVIDE GALVANIZED 9 GAGE POSITIONER AT ALL VERTICAL REINFORCING BARS. LOCATE POSITIONERS AT SECOND COURSE FROM TOP AND BOTTOM OF WALL AND AT MAXIMUM VERTICAL SPACING OF 8'-0"

2) TIE HORIZONTAL BARS TO VERTICAL BARS WITH VERTICAL BAR SPACING FROM CORNERS AND AT A MAXIMUM HORIZONTAL SPACING OF 8'-0"

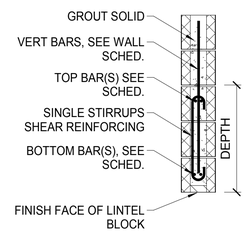

SINGLE

NOTE:
1) PROVIDE TEMPORARY SHORING FOR LINTELS.
2) PROVIDE 180 DEGREE HOOK AT BOTTOM OF STIRRUPS.
3) PROVIDE 180 DEGREE HOOK AT TOP OF STIRRUPS UNLESS STIRRUP REINFORCING CAN BE LAPPED 2'-6" MIN WITH WALL REINFORCING ABOVE LINTEL.

2 CONTROL JOINTS
3/4" = 1'-0"

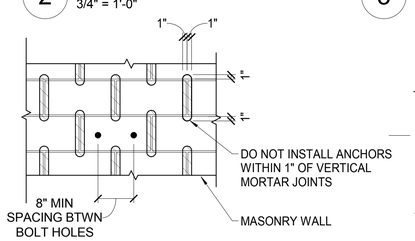

NOTES:
1. INSTALL ANCHOR ACCORDING TO MANUFACTURER'S PUBLISHED PROCEDURES
2. SPECIAL INSPECTION REQUIRED PER SHEET S1.1, ICC REPORTS, AND THE IBC.

3 BAR POSITIONERS
3/4" = 1'-0"

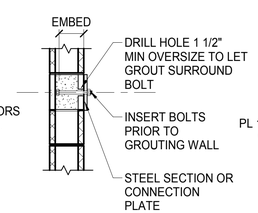

4 LINTLES
3/4" = 1'-0"

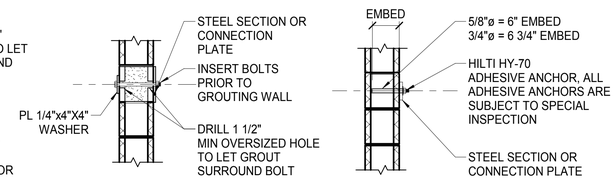

EMBEDDED BOLTS ELEVATION **EMBEDDED BOLTS** **THRU- BOLTS** **ADHESIVE ANCHORS**

5 TYPICAL ANCHORS IN MASONRY
3/4" = 1'-0"

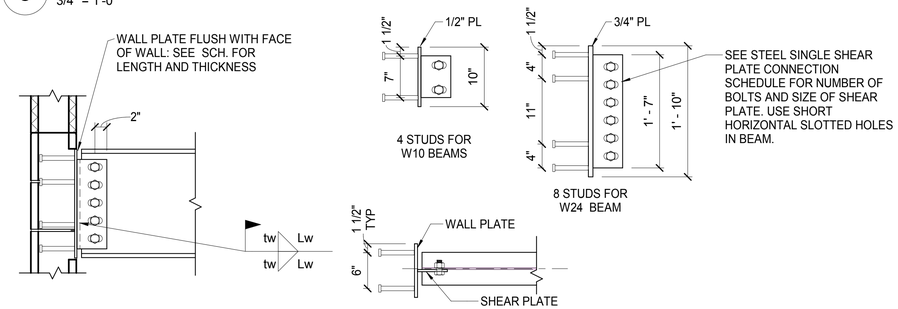

6 BEAM TO CMU WALL CONNECTION
1" = 1'-0"

MASONRY WALL REINFORCING SCHEDULE

MARK	CMU THK	WALL TYPE	GROUTING	VERTICAL REINFORCING	HORIZONTAL REINFORCING
8M	8"	8"x16" CMU	ALL CELLS	#5 AT 16" OC CENTERED	#4 AT 24" OC CENTERED w/ ADDITIONAL BARS AT FLOOR AND ROOF LEVELS AND AT TOP OF WALLS.

NOTES:

VERTICAL WALL REINFORCING SHALL BE HELD IN PLACE BY BAR POSITIONERS. SEE DIAGRAMS FOR POSITIONING AND CLEARANCE OF VERTICAL BARS.

MASONRY LINTEL SCHEDULE

MARK	CMU THICKNESS	MAXIMUM SPAN	GROUTING	LINTEL DEPTH	SHEAR REINFORCING	HORIZONTAL REINFORCING	COMMENTS
L1	8"	6-FT	SOLID	24"	NONE	(2) #4 BARS TOP (2) #4 BARS BOTTOM	
L2	8"	10-FT	SOLID	32"	#3 STIRRUPS AT 16" OC	(2) #4 BARS TOP (2) #4 BARS BOTTOM	

NOTES:

PROVIDE TEMPORARY SHORING FOR LINTELS UNTIL GROUT REACHES DESIGN STRENGTH.

MASONRY SHEAR PIER REINFORCING SCHEDULE

MARK	CMU THK	WALL TYPE	GROUTING	PIER LENGTH	VERT. BOUNDARY REINF.	VERTICAL REINFORCING	HORIZONTAL REINFORCING
MP1	8"	8"x16" CMU	ALL CELLS	SEE PLANS	(2) #5 BARS EA. END	#5 AT 16" OC CENTERED	#4 AT 24" OC CENTERED

NOTES:

VERTICAL WALL REINFORCING SHALL BE HELD IN PLACE BY BAR POSITIONERS. SEE DIAGRAMS FOR POSITIONING AND CLEARANCE OF BARS.

MASONRY LAP SPLICES

CMU THICKNESS	BAR SIZE					
	#3	#4	#5			
8"	15"	20"	25"			

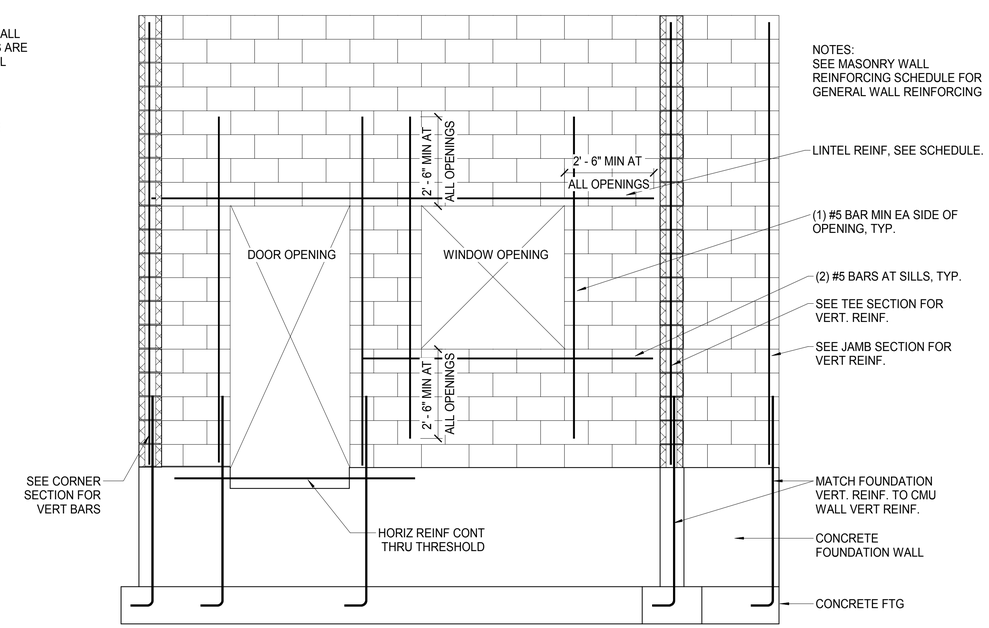

7 TYPICAL MASONRY WALL ELEVATION
1/2" = 1'-0"

STATE OF ALASKA
49TH
F. Charles Kenley
SE-1447
5.09.18
REGISTERED PROFESSIONAL ENGINEER

Burkhart Croft
ARCHITECTS LLC
880 N Street Suite 302 | Anchorage Alaska 99501
T: 907.929.9334 | www.burkhart-croft.com

PND
ENGINEERS, INC.
1506 WEST 36th AVENUE
ANCHORAGE, AK, 99503
PH 907.561.1011
WWW.PNDENGINEERS.COM

MATANUSKA-SUSITNA BOROUGH

MSB FIRE STATION 6-2

WASILLA, ALASKA

DATE: 5/09/18
DRAWN: DNB
CHECKED: CK
PROJECT: 171121
DRAWING TITLE:
MASONRY SCHEDULES AND TYPICAL DETAILS
REVISIONS:
SHEET NO:
S1.6

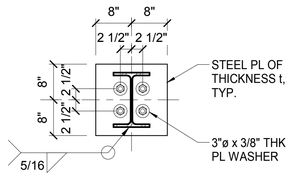

BP1	W12x50 W COLUMNS
t =1.25"	BOT. OF BASE PL EL= -0'-10"
ANCHOR RODS = (4) 1"ø w/ 12" EMBED	

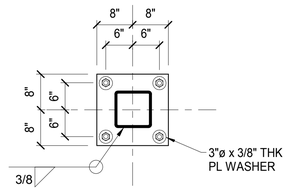

BP2	HSS8x8 & HSS6x6 COLUMNS
t =1.25"	BOT. OF BASE PL EL= -0'-10"
ANCHOR RODS = (4) 1"ø w/ 12" EMBED	

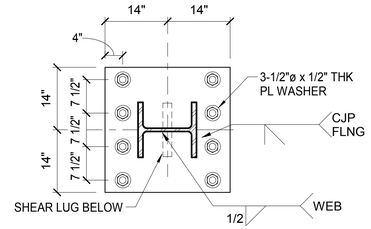

BP3	W12x120 MOMENT COLUMN
t =2.0"	BOT. OF BASE PL EL= -0'-10"
ANCHOR RODS = (8) 1-1/2"ø x 39" EMBED ASTM F1554 GRADE 105 REQ'D	

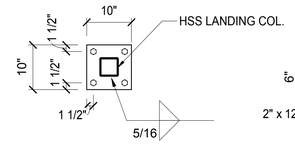

BP4	STAIR LANDING POSTS
t =1/2"	BOT. OF BASE PL EL= -0'-4"
ANCHOR RODS =(4) 3/4"ø w/8" EMBED	

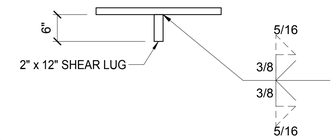

SHEAR LUG WELDING

ANCHOR ROD HOLES IN BASE PLATES				
ANCHOR ROD DIA., IN.	MIN. HOLE DIA., IN.	MAX HOLE DIA., IN.	MIN. WASHER SIZE*, IN.	MIN. WASHER THICKNESS, IN.
3/4	1	1 5/16	2	1/4
7/8	1 1/8	1 9/16	2 1/2	1/4
1	1 1/4	1 13/16	3	3/8
1 1/4	1 1/2	2 1/16	3	1/2
1 1/2	1 3/4	2 5/16	3 1/2	1/2

*CIRCULAR OR SQUARE WASHERS ARE ACCEPTABLE.

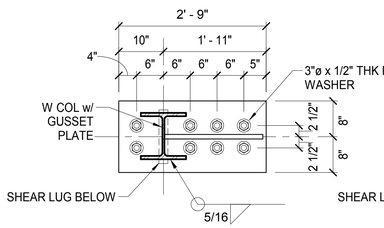

BP5	W10x68 BRACED COLUMNS
t =1.5"	BOT. OF BASE PL EL= -0'-10"
ANCHOR RODS = (8) 1-1/4"ø x 24" EMBED	

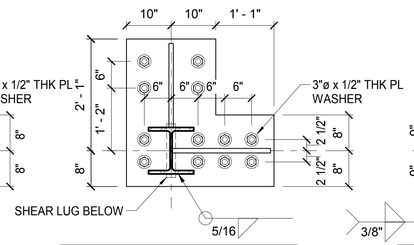

BP6	W10x68 TWO-WAY BRACED COL
t =1.5"	BOT. OF BASE PL EL= -0'-10"
ANCHOR RODS = (12) 1-1/4"ø x 24" EMBED	

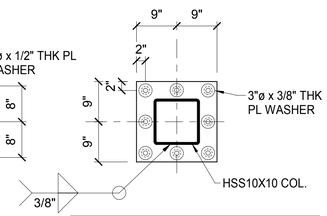

BP7	P10x10 CANOPY COLUMNS
t =1.5"	BOT. OF BASE PL EL= 99'-2"
ANCHOR RODS = (8) 1-1/4"ø w/ 24" EMBED	

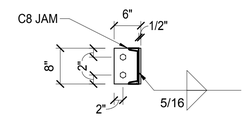

BP8	C8 O.H. DOOR JAMBS
t =1/2"	BOT. OF BASE PL EL= 0'-0"
ADHESIVE ANCHORS =(2) 3/4"ø w/6" EMBED	

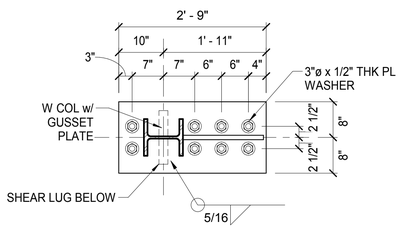

BP9	W8x58 BRACED COLUMNS
t =1.5"	BOT. OF BASE PL EL= -0'-10"
ANCHOR RODS = (8) 1-1/4"ø x 24" EMBED	

1 STEEL COLUMN BASE PLATES
3/4" = 1'-0"

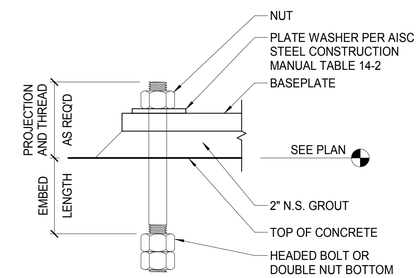

2 ANCHOR ROD DETAIL
3/4" = 1'-0"

STATE OF ALASKA
49 TH
F. Charles Kenley
SE-1447
5-09-18
REGISTERED PROFESSIONAL ENGINEER

Burkhart Croft
ARCHITECTS LLC
880 N Street Suite 302 | Anchorage Alaska 99501
T: 907.929.9334 | www.burkhart-croft.com

PND
ENGINEERS, INC.
1506 WEST 36th AVENUE
ANCHORAGE, AK, 99503
PH 907.561.1011
WWW.PNDENGINEERS.COM

MATANUSKA-SUSITNA BOROUGH

MSB FIRE STATION 6-2

WASILLA, ALASKA

DATE: 5/09/18

DRAWN: DNB

CHECKED: CK

PROJECT: 171121

DRAWING TITLE:
STEEL COLUMN BASE PLATES

REVISIONS:
2 FMC-002 4-24-2018

SHEET NO:

S1.7

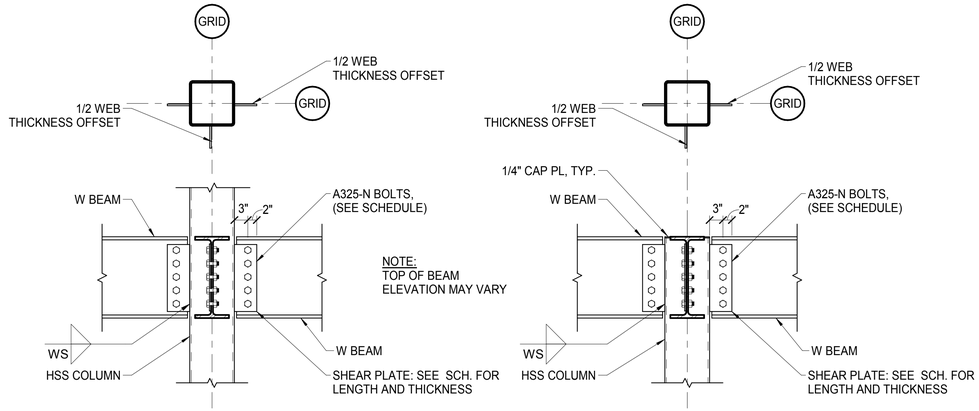

1 TYPICAL BEAM TO HSS COLUMN CONNECTIONS
3/4" = 1'-0"

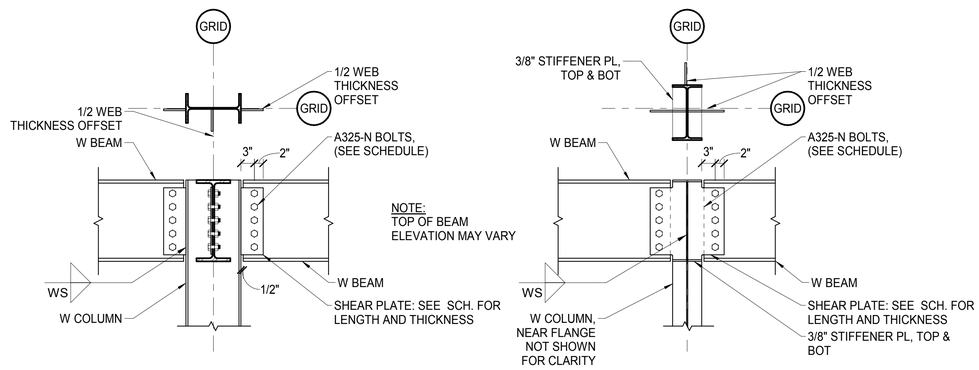

2 TYPICAL BEAM TO WF COLUMN CONNECTION
3/4" = 1'-0"

SINGLE SHEAR PLATE CONNECTION SCHEDULE

BEAM SIZE	BOLT DIA.	No. OF BOLTS	HOLE TYPE	PLATE LENGTH	PLATE THICK.	FILLET WELD SIZE (WS)	CAPACITY (kips)	
							ASD	LRFD
W8's	7/8"	2	STD	5 1/2"	1/4"	3/16"	16.3	24.5
W10's	7/8'	2	STD	5 1/2"	1/4"	3/16"	16.3	24.5
W12's	7/8"	3	STD	9"	1/4"	3/16"	26.1	39.2
W14's	7/8"	3	STD	9"	1/4"	3/16"	26.1	39.2
W16's	7/8"	4	STD	12"	7/16"	1/4"	34.8	52.2
W18's	7/8"	5	STD	15"	7/16"	1/4"	54.4	81.6
W21's	1 1/8"	5	STD	16"	1/2"	5/16"	73.1	107
W24's	1 1/8"	6	STD	19"	1/2"	5/16"	84.1	126
W27's	1 1/8"	7	STD	22"	1/2"	5/16"	113	170
W30's	1 1/8"	8	STD	25"	1/2"	5/16"	131	196

NOTES:
1. JOINT TYPE: ALL BOLTED CONNECTIONS AT SINGLE SHEAR PLATES ARE PRETENSIONED JOINTS.
2. USE SINGLE SHEAR PLATE CONNECTIONS AT ALL BEAM TO COLUMN CONNECTIONS EXCEPT COLLECTORS AND BRACED FRAME CONNECTIONS.
3. USE SINGLE SHEAR PLATE CONNECTIONS AT ALL BEAM TO GIRDER CONNECTIONS.
4. SHEAR PLATE Fy = 36 ksi
5. ALL BOLTS FOR SHEAR PLATE CONNECTIONS ARE GROUP A, ASTM A325 TYPE N, UNO. REFER TO THE SPECIFICATION FOR TIGHTENING AND TESTING PROCEDURES.
6. PL WIDTH IS AS SHOWN IN THE TYP DETAILS.
7. BOLT PITCH = 3". VERTICAL EDGE DISTANCE (Lev) IS 1 1/2". HORIZONTAL EDGE DISTANCE (Leh) IS 2x BOLT DIAMETER OR A MIN. OF 2". DISTANCE FROM COLUMN TO BOLT IS 3".
8. USE E70XX ELECTRODES.
9. BOLT HOLES IN SINGLE SHEAR PLATES SHALL BE STANDARD HOLES UNO.

COLLECTOR CONNECTION SCHEDULE

BEAM SIZE	BOLT DIA.	No. OF BOLTS	HOLE TYPE	PLATE LENGTH	PLATE THICK.	FILLET WELD SIZE (WS)
W12's	7/8"	6	STD	9"	1/4"	3/16"
W14's	7/8"	6	STD	9"	1/4"	3/16"
W16's	7/8"	8	STD	12"	7/16"	1/4"
W18's	7/8"	10	STD	15"	7/16"	1/4"
W21's	1 1/8"	10	STD	16"	1/2"	5/16"
W24's	1 1/8"	12	STD	19"	1/2"	5/16"
W27's	1 1/8"	14	STD	22"	1/2"	5/16"
W30's	1 1/8"	16	STD	25"	1/2"	5/16"

NOTES:
1. JOINT TYPE: ALL BOLTED CONNECTIONS FOR COLLECTORS ARE PRETENSIONED JOINTS WITH CLASS A SURFACE PREPARATION ON ALL FAYING SURFACES.
2. SHEAR PLATE Fy = 36 ksi
3. ALL BOLTS FOR SHEAR PLATE CONNECTIONS ARE GROUP A, ASTM A325 TYPE N, UNO. REFER TO THE SPECIFICATION FOR TIGHTENING AND TESTING PROCEDURES.
4. USE E70XX ELECTRODES.
5. BOLT HOLES IN SINGLE SHEAR PLATES SHALL BE STANDARD HOLES UNO.
6. PL WIDTH IS SHOWN IN THE TYP. DETAILS.
7. BOLT PITCH =3". VERTICAL EDGE DISTANCE (Lev) IS 1 1/2". HORIZONTAL EDGE DISTANCE (Leh) IS 2x BOLT DIAMETER OR A MIN. OF 2". DISTANCE FROM FACE OF COLUMN TO FIRST BOLT LINE IS 3".

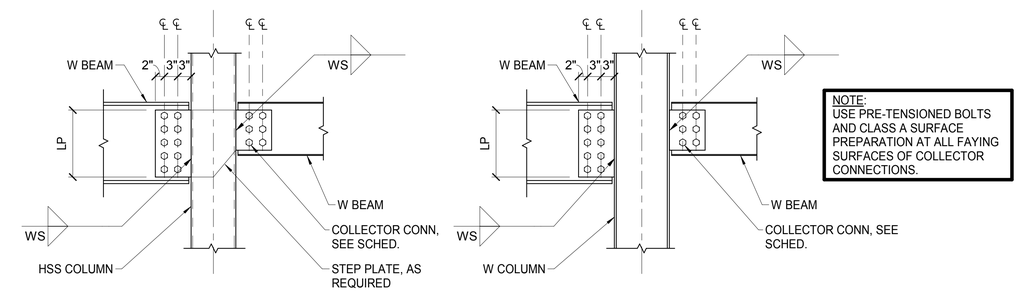

NOTE:
USE PRE-TENSIONED BOLTS AND CLASS A SURFACE PREPARATION AT ALL FAYING SURFACES OF COLLECTOR CONNECTIONS.

3 TYP COLLECTOR BEAM CONN AT HSS & W COL - ALL BM WXX-XX (C)
3/4" = 1'-0"

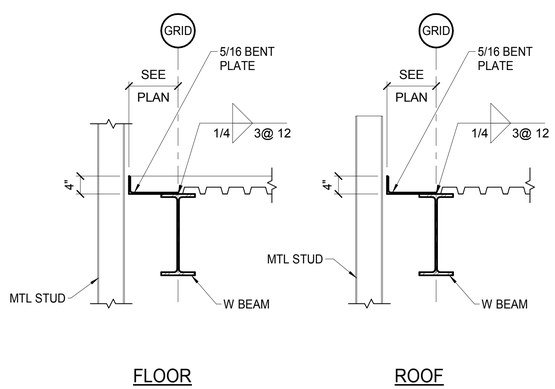

6 TYPICAL EDGE ANGLES
3/4" = 1'-0"

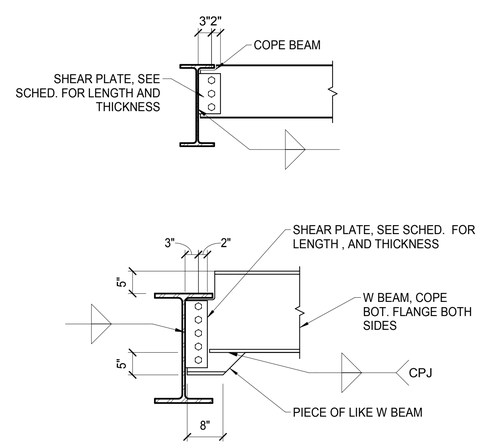

5 TYPICAL BEAM TO GIRDER CONNECTION
3/4" = 1'-0"

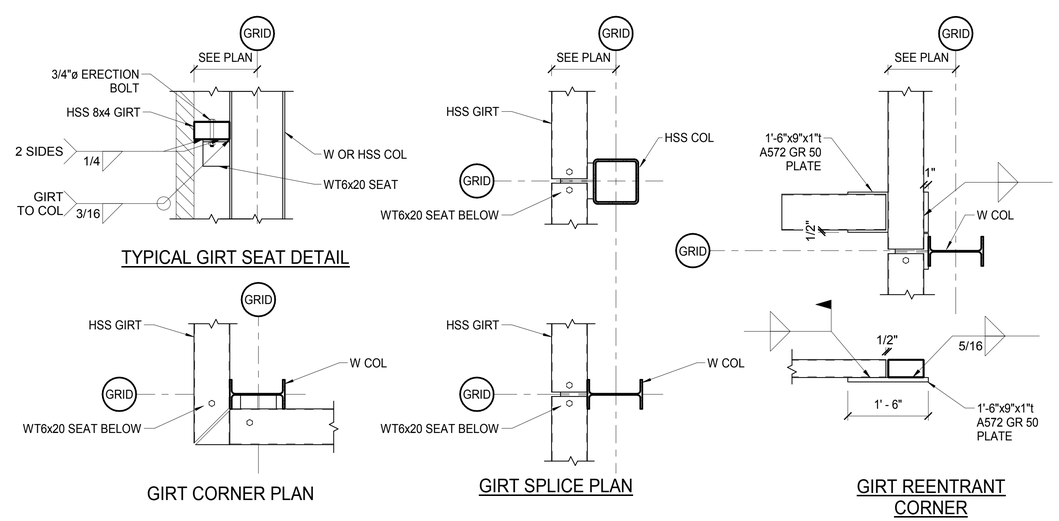

4 WALL GIRT DETAILS
3/4" = 1'-0"

STATE OF ALASKA 49TH F. Charles Kenley SE-1447 5-09-18 REGISTERED PROFESSIONAL ENGINEER

Burkhart Croft ARCHITECTS LLC
880 N Street Suite 302 | Anchorage Alaska 99501
T: 907.929.9334 | www.burkhart-croft.com

PND ENGINEERS, INC.
1506 WEST 36th AVENUE
ANCHORAGE, AK, 99503
PH 907.561.1011
WWW.PNDENGINEERS.COM

MATANUSKA-SUSITNA BOROUGH
MSB FIRE STATION 6-2
WASILLA, ALASKA

DATE: 5/09/18
DRAWN: DNB
CHECKED: CK
PROJECT: 171121
DRAWING TITLE: STRUCTURAL STEEL SCHEDULES AND TYPICAL DETAILS
REVISIONS:
SHEET NO:
S1.8

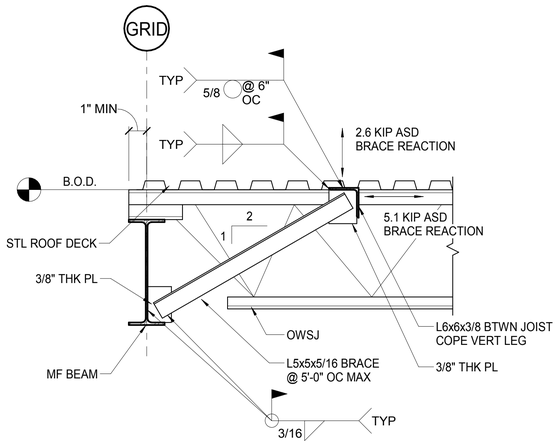

1 MF BEAM BRACE BELOW JOIST
1" = 1'-0"

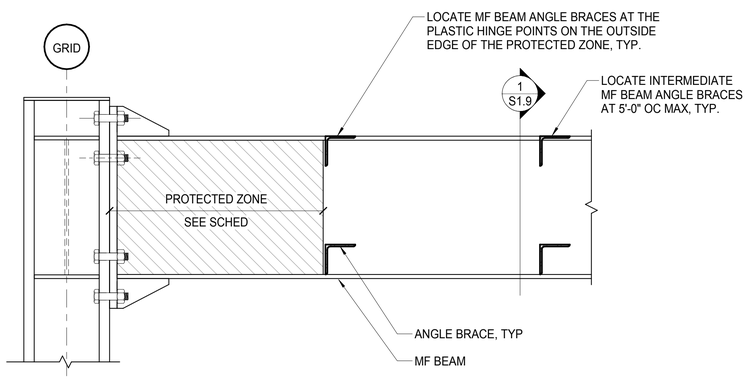

2 MF BEAM ANGLE BRACING LAYOUT
1" = 1'-0"

SPECIAL BOLTED END-PLATE MOMENT FRAME CONNECTION SCHEDULE

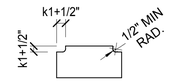

CONTINUITY PLATES

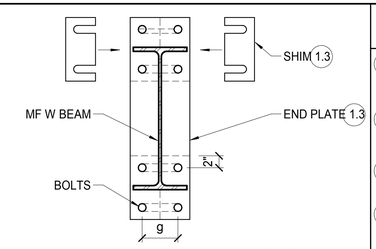

TYP FINGER SHIMS (IF REQUIRED)

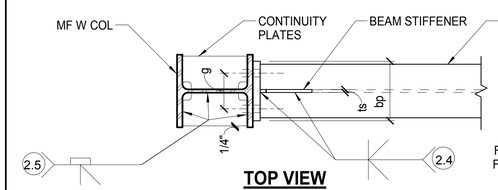

TOP VIEW

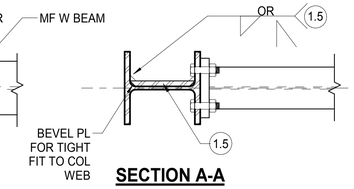

SECTION A-A

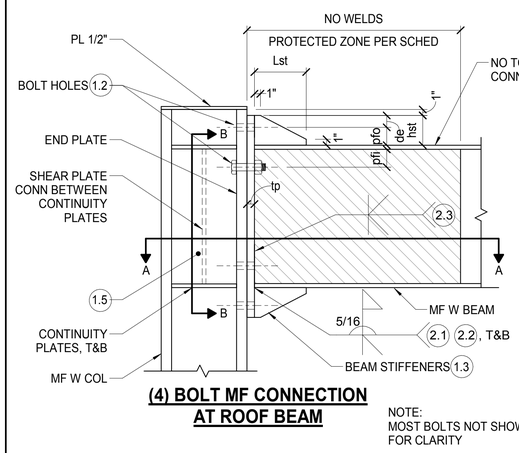

(4) BOLT MF CONNECTION AT ROOF BEAM

NOTE:
MOST BOLTS NOT SHOWN FOR CLARITY

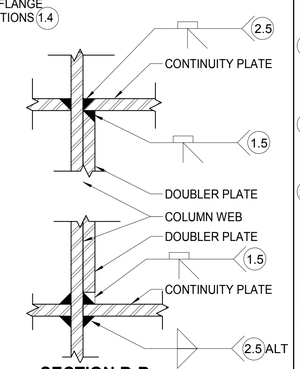

SECTION B-B

GENERAL NOTES

1.1 BLOCKOUT CONCRETE FOR DECK 1" AROUND BOTH SIDES OF THE COLUMN FLANGES AND CONNECTION COMPONENTS. FILL WITH COMPRESSIBLE JOINT FILLER. (AISC 358-10 Sect. 6.9.6)

1.2 BOLT SIZE AND GRADE INDICATED ON SCHEDULE. BOLTS SHALL BE PRETENSIONED AND INSTALLED ACCORDING TO THE RCSC SPECIFICATION. BOLT NUT IS ON BEAM SIDE.

1.3 END PLATE, STIFFENERS, CONTINUITY PLATES, AND SHIMS ARE ASTM A572 GRADE 50 STEEL.

1.4 TOP FLANGE OF MOMENT FRAME BEAMS ARE TO NO WELDS, NOTCHES OR BOLTED ATTACHMENTS WITHIN 1.5*BEAM DEPTH FROM THE FACE OF THE COLUMN. METAL DECK ARC SPOT WELDS ARE OK. (AISC 358-10 SECT.6.9.6)

1.5 DOUBLER PLATE A572 GRADE 50 STEEL CJP WELD TO CONTINUITY PLATE & FILLET WELDED TO COLUMN FLANGES. SEE SCHEDULE BELOW FOR MINIMUM FILLET WELD SIZE. ALTERNATE: CJP WELD TO COLUMN FLANGE & CJP WELD TO CONTINUITY PLATE.

END-PLATE WELDS

2.1 CJP, BACKGOUGE, BEAM FLANGE TO END-PLATE CJP GROOVE WELD SHALL BE MADE WITHOUT BACKING. THE CJP WELD SHALL BE MADE SUCH THAT THE ROOT OF THE WELD IS ON THE BEAM WEB SIDE OF THE BEAM FLANGE. BACKGOUGE AND PROVIDE REINFORCING FILLET AS INDICATED. THESE WELDS SHALL BE DEMAND CRITICAL [DEMAND CRITICAL] (AISC 358-10 Sect. 6.9.7(2))

2.2 BACKGOUGING OF THE ROOT IS NOT REQUIRED IN THE FLANGE DIRECTLY ABOVE AND BELOW THE BEAM WEB FOR A LENGTH EQUAL TO 1.5k1. FULL-DEPTH PJP PERMITTED AT THIS LOCATION. (AISC 358-10 Sect. 6.9.7(4)).

2.3 CJP. BEAM WEB TO END-PLATE. (AISC 358-10 Sect. 6.9.7(3))

2.4 CJP. STIFFENER TO BEAM FLANGE AND END-PLATE. (AISC 358-10 Sect. 6.9.7(5))

2.5 CJP. CONTINUITY PLATE TO COLUMN WEB AND FLANGES. AISC341-10 Sect. E3.6f(3)) CONTINUITY PLATE TO COLUMN WEB WELD ALTERNATE: FILLET WELD TOP AND BOTTOM. SEE SCHEDULE BELOW FOR MINIMUM FILLET WELD SIZE. STOP WELD 1/4": FROM COPING

2.6 ALL WELDS USED IN MEMBERS AND CONNECTIONS IN THE LATERAL FORCE RESISTING SYSTEM SHALL BE MADE WITH A FILLER METAL MEETING THE REQUIREMENTS SPECIFIED IN CLAUSE 6.3 OF *STRUCTURAL WELDING CODE - SEISMIC SUPPLEMENT* (AWS D1.8/D1.8M). REF AISC 341-10 A3.4a)

2.7 DEMAND CRITICAL WELDING: ALL WELDS DESIGNATED [DEMAND CRITICAL] SHALL BE MADE WITH A FILLER METAL MEETING THE REQUIREMENTS SPECIFIED IN AWS D1.8/D1.8M CLAUSE 6.3. (AISC 341-10 A3.4b)

2.8 WELD ACCESS HOLES SHALL NOT BE USED TO WELD BEAM TO END PLATES. (AISC 358-10 Sect. 6.9.7(1))

PROTECTED ZONES: NO WELDED, BOLTED, SCREWED OR SHOT IN ATTACHMENTS SHALL BE PLACED WITHIN PROTECTED ZONE. METAL DECK WELDS ARE ACCEPTABLE.

SPECIAL INSPECTIONS: SPECIAL INSPECTIONS REQUIRED BY SECTION 1705 ARE NOT REQUIRED WHERE THE WORK IS DONE ON THE PREMISES OF A FABRICATOR REGISTERED AND APPROVED TO PERFORM SUCH WORK WITHOUT SPECIAL INSPECTION (IBC 1704.2.5.2). HOWEVER, NON DESTRUCTIVE TESTING (NDT) REQUIREMENTS CANNOT BE WAIVED PER AISC 360-10 SECTION N7. THE CONTRACTOR'S FABRICATOR SHALL PERFORM OR ENGAGE A QUALIFIED TESTING AGENCY TO PERFORM REQUIRED TESTING ON THE PREMISES OF THE FABRICATOR. TESTING DOCUMENTATION SHOWING COMPLIANCE SHALL BE SUBMITTED TO THE OWNER UPON COMPLETION OF TESTING. THE REQUIRED NDT PROCEDURES AND TESTING FREQUENCIES ARE INDICATED ON THE SPECIAL INSPECTIONS SHEETS INCLUDED IN THIS DRAWING SET.

BOLTED MOMENT FRAME CONNECTION SCHEDULE

FRAME			BEAM END-PLATE						BOLTS			BEAM STIFFENERS			CONTINUITY PLATES		DOUBLER PLATE	
COL SIZE	BEAM SIZE	BEAM PROTECTED ZONE (IN.)	THICKNESS, tp (IN.)	WIDTH, bp (IN.)	GAGE, g (IN.)	pfi (IN.)	pfo (IN.)	EDGE DIST, de (IN.)	BOLT MATERIAL	DIAMETER (IN.)	# BOLTS @ EA FLNG	THICKNESS, ts (IN.)	HEIGHT, hst (IN.)	LENGTH, Lst (IN.)	THICKNESS (IN.)	FILLET WELD TO COLUMN WEB (IN.)	THICKNESS (IN.)	FILLET WELD (IN.)
W12x120	W24x62	22	1 1/4	10	6	3	3	2"	A490	1 1/8	4	1/2	5"	8 3/4"	1/2	3/8	3/8	3/8

STATE OF ALASKA 49TH F. Charles Kenley SE-1447 5.09.18 REGISTERED PROFESSIONAL ENGINEER

Burkhart Croft ARCHITECTS LLC
880 N Street Suite 302 | Anchorage Alaska 99501
T: 907.929.9334 | www.burkhart-croft.com

PND ENGINEERS, INC.
1506 WEST 36th AVENUE
ANCHORAGE, AK, 99503
PH 907.561.1011
WWW.PNDENGINEERS.COM

MATANUSKA-SUSITNA BOROUGH

MSB FIRE STATION 6-2

WASILLA, ALASKA

DATE: 5/09/18
DRAWN: DNB
CHECKED: CK
PROJECT: 171121
DRAWING TITLE: STEEL MOMENT FRAME SCHEDULE AND TYPICAL DETAILS
REVISIONS:
SHEET NO: **S1.9**

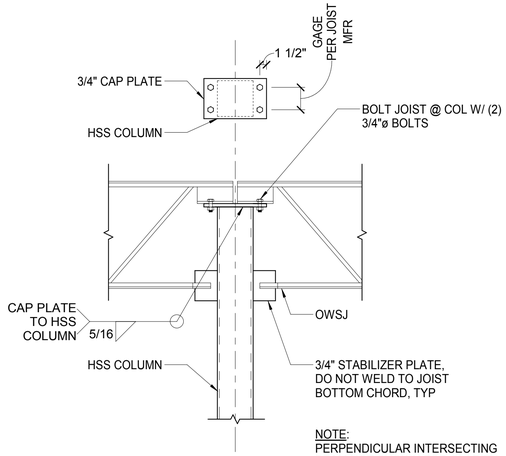

NOTE:
PERPENDICULAR INTERSECTING BEAM NOT SHOWN FOR CLARITY.

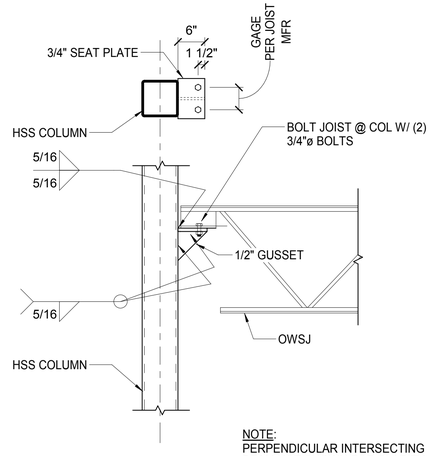

NOTE:
PERPENDICULAR INTERSECTING BEAM NOT SHOWN FOR CLARITY.

1 TYP. BOLTED JOIST TO HSS COLUMN CONNECTION

3/4" = 1'-0"

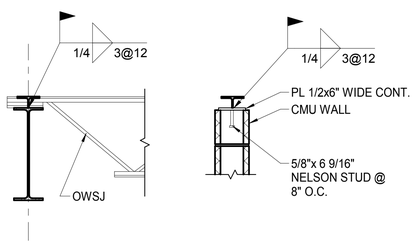

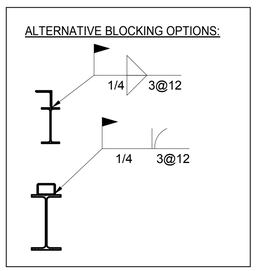

NOTES:

1. INSTALL BLOCKING BETWEEN JOIST SEATS OVER ALL COLLECTOR BEAMS, DESIGNATED WXXxXX(C) ON PLANS AND INTERIOR CMU WALLS .
2. BLOCKING LENGTH TO BE COORDINATED W/ JOIST SUPPLIER.
3. K SERIES JOIST BLOCKING OPTIONS: WT2.5x8, HSS4x2-1/2x1/4" OR 4x2 1/2" BENT PLATE
4. LH SERIES JOIST BLOCKING OPTIONS: WT 5x7.5, L5X5X5/16 OR BENT PLATE

2 TYP. JOIST BLOCKING DETAILS

3/4" = 1'-0"

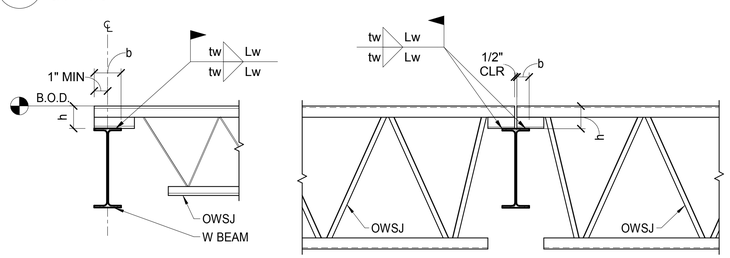

JOIST	b (STEEL)	h	tw	Lw (STEEL)
K	2 1/2"	2 1/2" UNO	1/4	2
LH	3 1/2"	5" UNO	1/4	2

TABLE VALUES TO BE USED UNO IN DETAILS

NOTE:
SEE DETAILS FOR BOLTED JOIST CONNECTIONS AT COLUMNS.

3 JOIST SEAT WELDING

3/4" = 1'-0"

OPEN WEB STEEL JOIST SCHEDULE

AREA	MARK	JOIST TYPE	DEPTH	CHORDS	SEAT DEPTH	GRAVITY LOAD CAPACITY			SPECIAL LOADING CONDITIONS	NOTES
						DL	LL	TL		
LOW ROOF	16K	K SERIES	16"	PARALLEL	2 1/2" & 5"	20 PSF	50 PSF	70 PSF	SNOW DRIFT, SEE PLANS	
	24K	K SERIES	24"	PARALLEL	2 1/2"	20 PSF	50 PSF	70 PSF	SNOW DRIFT, SEE PLANS	
	26K	K SERIES	26"	PARALLEL	2 1/2"	20 PSF	50 PSF	70 PSF	SNOW DRIFT, SEE PLANS	
MUSEUM ROOF	28LH	LH SERIES	28"	PARALLEL	5"	20 PSF	50 PSF	70 PSF		
CANOPY ROOF	16K	K SERIES	16"	PARALLEL	5"	20 PSF	50 PSF	70 PSF	SNOW DRIFT, SEE PLANS	
HIGH ROOF	16K	K SERIES	16"	PARALLEL	2 1/2" & 5"	20 PSF	50 PSF	70 PSF		
	36LH	LH SERIES	36"	PARALLEL	5"	20 PSF	50 PSF	70 PSF		
	32LH	LH SERIES	32"	PARALLEL	5"	20 PSF	50 PSF	70 PSF	MF BEAM BRACING LOADS, SEE 1 / S1.9	

NOTES:

1. LIVE LOAD DEFLECTION SHALL BE LIMITED TO L/360. TOTAL LOAD DEFLECTION IS LIMITED TO L/240.
2. JOIST SHALL BE DESIGNED FOR UNIFORM GRAVITY LOADS SHOWN ABOVE WITH ADDITIONAL SPECIAL LOADINGS SHOWN.
3. ROOF JOISTS SHALL BE CHECKED FOR THE UNIFORM WIND UPLIFT LOADS SHOWN IN THE ROOF ZONE DIAGRAM. JOIST DESIGNER MAY ASSUME 10 PSF DEAD LOAD IS PRESENT ON JOIST (NOT INCLUDING JOIST SELF-WEIGHT) WHEN DETERMINING NET UPLIFT.
4. THE MANUFACTURER SHALL SUPPLY ROWS OF BRIDGING FOR BOTH STABILITY AND WIND UPLIFT. BRIDGING DETAILS SHALL BE COORDINATED WITH THE MECHANICAL AND ELECTRICAL DRAWINGS.
5. IN ADDITION TO THE UNIFORM AND SPECIAL LOADS, EACH JOIST SHALL BE DESIGNED FOR A SINGLE CONCENTRATED LOAD OF 300# LOCATED ANYWHERE ON THE TOP OR BOTTOM CHORD.
6. (T) INDICATES TAG END OF JOIST OR SNOW DRIFT END, SEE PLANS.

SPECIAL JOIST LOADING - SNOW DRIFTING

MARK	DRIFT SURCHARGE LOAD	DRIFT WIDTH
SD#1	71 PSF	13' - 10"
SD#2	83 PSF	16' - 1"
SD#3	30 PSF	11' - 8"
SD#4	76 PSF	14' - 9"
SD#5	55 PSF	10' - 7"

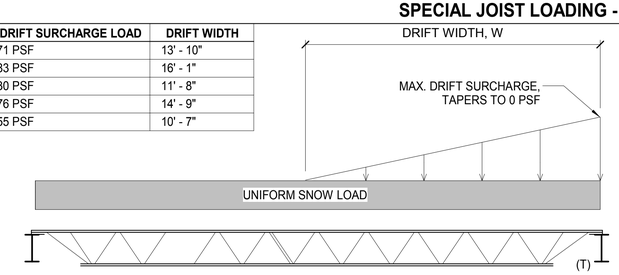

DRIFT PARALLEL TO JOIST

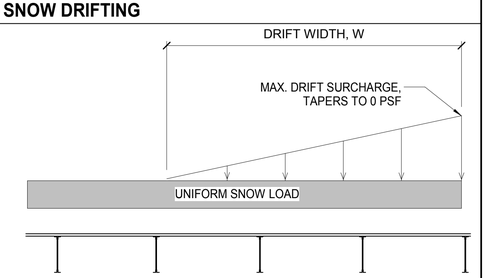

DRIFT PERPENDICULAR TO JOIST

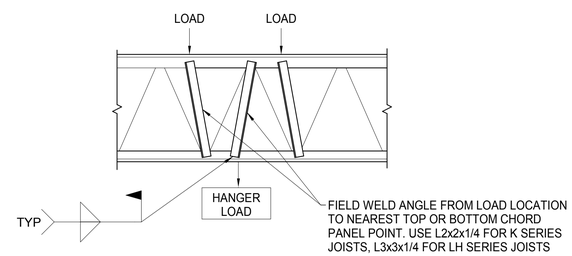

NOTES:

1. MODIFICATION IS TYP. FOR ALL JOISTS SUPPORTING LOAD FROM TOP OR BOTTOM CHORD BETWEEN PANEL PTS. VERIFY LOC. & NO. OF LOADS w/ ARCH., MECH., PLUMB., & ELEC. DWGS
2. MAXIMUM TOTAL ADDED LOAD TO SINGLE JOIST = 300LB. LOADS GREATER THAN 300LB SHALL BE REVIEWED BY JOIST MANUFACTURER.
3. ROUND BAR NOT ACCEPTABLE FOR REINFORCEMENT. USE ANGLES.

4 TYP. JOIST REINFORCEMENT

3/4" = 1'-0"

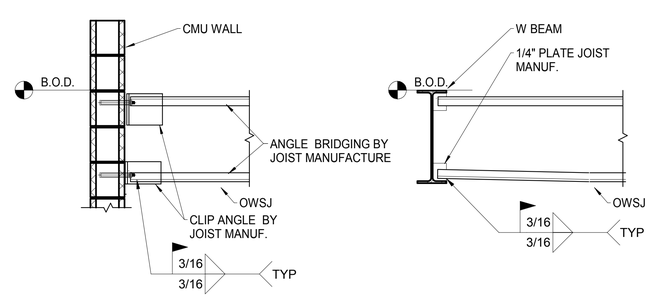

5 TYP. JOIST BRIDGING CONNECTIONS

3/4" = 1'-0"

STATE OF ALASKA
49 TH
F. Charles Kenley
SE-1447
5.09.18
REGISTERED PROFESSIONAL ENGINEER

Burkhart Croft
ARCHITECTS LLC
880 N Street Suite 302 | Anchorage Alaska 99501
T: 907.929.9334 | www.burkhart-croft.com

PND ENGINEERS, INC.
1506 WEST 36th AVENUE
ANCHORAGE, AK, 99503
PH 907.561.1011
WWW.PNDENGINEERS.COM

MATANUSKA-SUSITNA BOROUGH

MSB FIRE STATION 6-2

WASILLA, ALASKA

DATE: 5/09/18
DRAWN: DNB
CHECKED: CK
PROJECT: 171121
DRAWING TITLE: STEEL JOIST SCHEDULES AND TYPICAL DETAILS
REVISIONS:
SHEET NO:

S1.10

ROOF DECK SHEAR/GRAVITY LOAD DIAGRAM

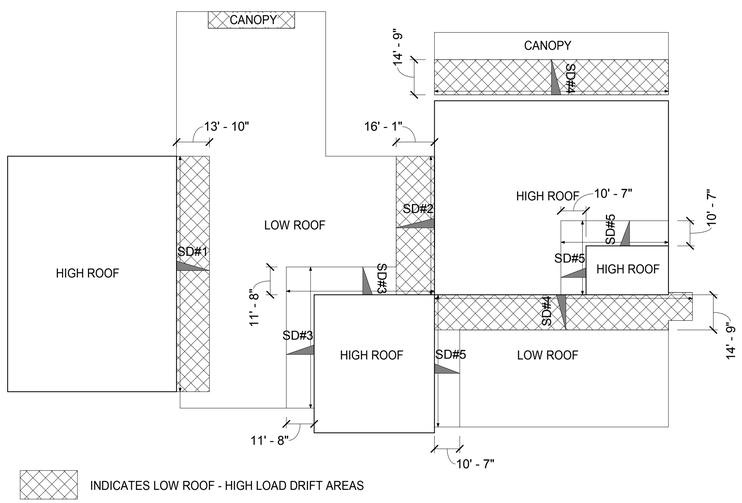

STEEL ROOF AND FLOOR DECK SCHEDULE

LEVEL/AREA	DECK TYPE	MIN. GAGE	TOTAL THICKNESS w/CONCRETE	VERTICAL LOAD CAPACITY	DIAPHRAGM SHEAR CAPACITY	DECK FASTENING						SHORING REQUIREMENTS
						SUPPORTS		PANEL PERIMETER		SIDE LAPS		
						Type	Spacing	Type	Spacing	Type	Spacing	
HIGH ROOF	1 1/2" TYPE B ROOF	20		100 PSF	800 PLF	5/8" WELD	TBD	5/8" WELD	TBD	PUNCH LOCK	TBD	
LOW ROOF	1 1/2" TYPE B ROOF	20		100 PSF	1000 PLF	5/8" WELD	TBD	5/8" WELD	TBD	PUNCH LOCK	TBD	
CANOPIES	1 1/2" TYPE B ROOF	18		150 PSF	1000 PLF	5/8" WELD	TBD	5/8" WELD	TBD	PUNCH LOCK	TBD	
LOW ROOF- HIGH LOAD DRIFT AREAS	1 1/2" TYPE B ROOF	18		150 PSF	1000 PLF	5/8" WELD	TBD	5/8" WELD	TBD	PUNCH LOCK	TBD	
MEZZ. FLOOR	1 1/2" TYPE B COMPOSITE	20	4"	125 PSF	1500 PLF	5/8" WELD	TBD	5/8" WELD	TBD	PUNCH LOCK	TBD	
TANK LID/FLOOR	2" TYPE W COMPOSITE	18	8"	250 PSF	N/A	PDF	12"	PDF	12"	PUNCH LOCK	TBD	MID-SPAN SHORING REQUIRED

NOTES:
1. FASTENER SPACING: "TBD" INDICATES SPACING TO BE DETERMINED BY DECKING MANUFACTURER.
2. SPOT WELD SIZES IN SCHEDULE ARE VISUAL WELD DIAMETERS.
3. CONTRACTOR MAY SUBMIT ALTERNATE FASTENING METHODS FOR APPROVAL.

DECK FASTENING DETAILS TO STEEL

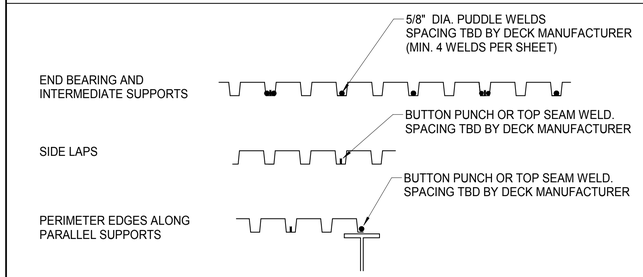

ROOF DECK WIND UPLIFT ZONE DIAGRAM

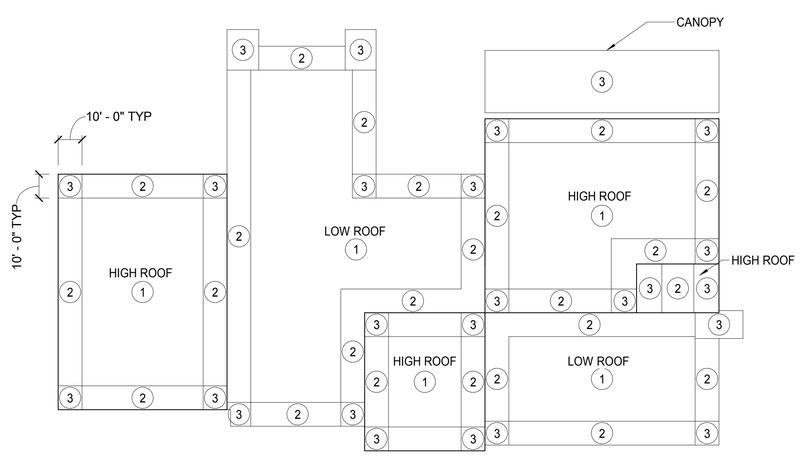

NOTES:

1. SEE DESIGN CRITERIA SHEET FOR C&C WIND PRESSURES IN ZONE 1-3.
2. ROOF JOIST DESIGNERS MAY ASSUME 10 PSF ROOF DEAD LOAD IN ADDITION TO JOIST WEIGHT WHEN CALCULATING NET UPLIFT PRESSURES.

NOTE:
NO SUPPLEMENTARY FRAMING REQ'D AT OPENINGS WHICH DO NOT CUT DECK WEBS.

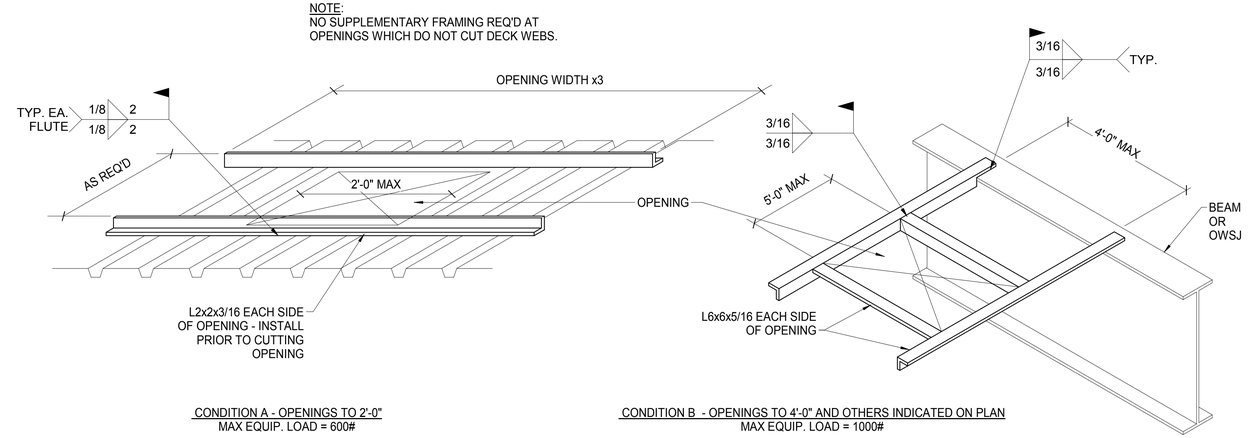

CONDITION A - OPENINGS TO 2'-0"
MAX EQUIP. LOAD = 600#

CONDITION B - OPENINGS TO 4'-0" AND OTHERS INDICATED ON PLAN
MAX EQUIP. LOAD = 1000#

1 TYPICAL ROOF PENETRATIONS
3/4" = 1'-0"

STATE OF ALASKA 49TH F. Charles Kenley SE-1447 5.09.18 REGISTERED PROFESSIONAL ENGINEER

Burkhart Croft ARCHITECTS LLC
880 N Street Suite 302 | Anchorage Alaska 99501
T: 907.929.9334 | www.burkhart-croft.com

PND ENGINEERS, INC.
1506 WEST 36th AVENUE
ANCHORAGE, AK, 99503
PH 907.561.1011
WWW.PNDENGINEERS.COM

MATANUSKA-SUSITNA BOROUGH

MSB FIRE STATION 6-2

WASILLA, ALASKA

DATE: 5/09/18
DRAWN: DNB
CHECKED: CK
PROJECT: 171121
DRAWING TITLE: STEEL DECK SCHEDULES AND TYPICAL DETAILS
REVISIONS:
SHEET NO: **S1.11**

TANK FOUNDATION NOTES:

1. PROVIDE ONE ROW OF SHORING BEAMS IN EACH BAY OF TANK UNTIL CONCRETE REACHES 75% OF REQUIRED STRENGTH. PROVIDE TWO ROWS IN PUMP ROOM.
2. TANK IS TO RECIEVE A SPRAY-APPLIED LINING ON INTERIOR SURFACES OF WALLS, FLOOR AND LID.
3. PROVIDE 2'x2'x2' DEEP SUMP IN PUMP ROOM.
4. PROVIDE 3'x3'x2' DEEP SUMP UNDER PUMP INTAKE. LOCATE AS REQUIRED.
5 TOP OF FOOTING TO MATCH TOP OF TANK FLOOR.

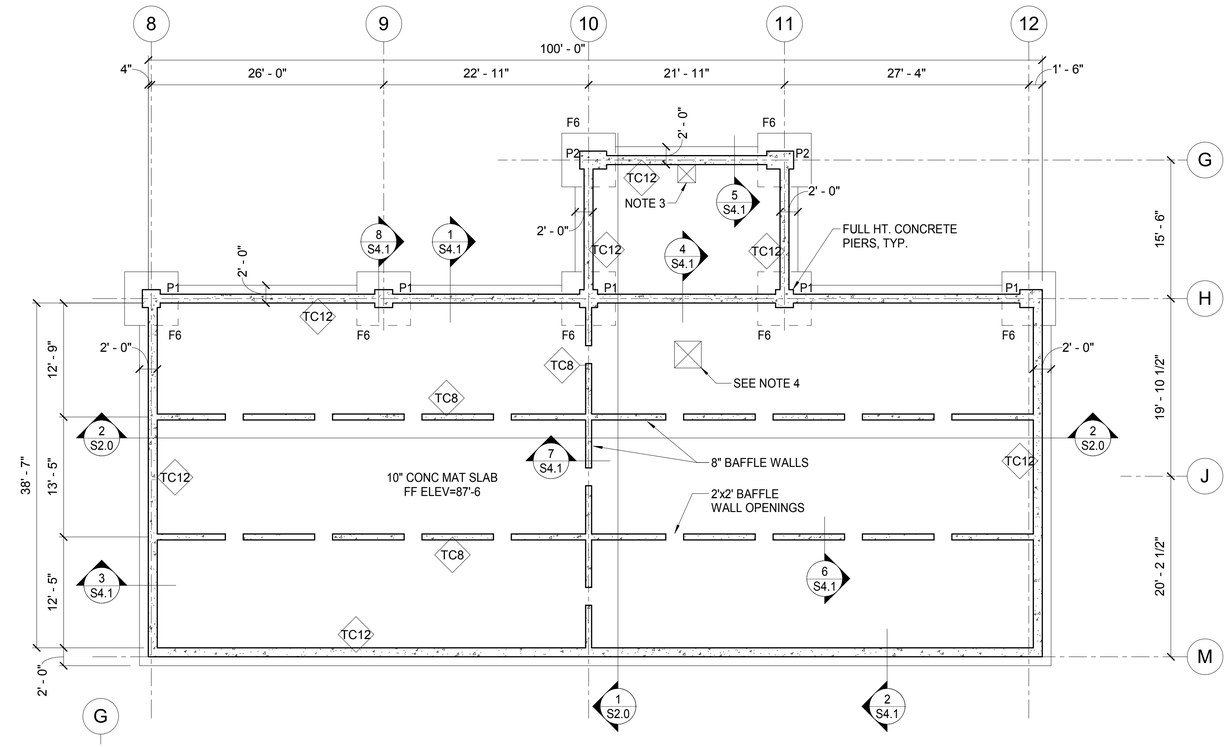

A TANK FOUNDATION PLAN
1/8" = 1'-0"

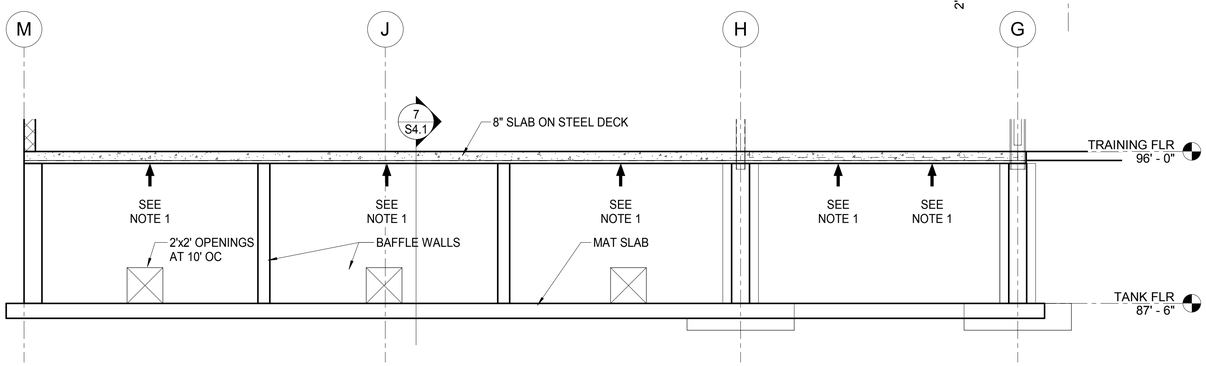

1 TANK SECTION
1/4" = 1'-0"

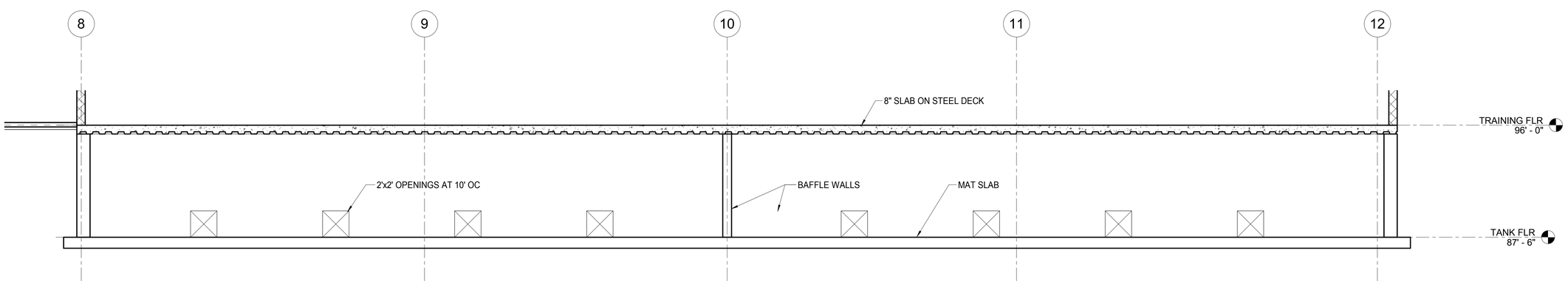

2 TANK SECTION
1/4" = 1'-0"

STATE OF ALASKA
49TH
F. Charles Kenley
SE-1447
5.09.18
REGISTERED PROFESSIONAL ENGINEER

Burkhart Croft
ARCHITECTS LLC
880 N Street Suite 302 | Anchorage Alaska 99501
T: 907.929.9334 | www.burkhart-croft.com

P N D
ENGINEERS, INC.
1506 WEST 36th AVENUE
ANCHORAGE, AK, 99503
PH 907.561.1011
WWW.PNDENGINEERS.COM

MATANUSKA-SUSITNA BOROUGH

MSB FIRE STATION 6-2

WASILLA, ALASKA

DATE:	5/09/18
DRAWN:	DNB
CHECKED:	CK
PROJECT:	171121
DRAWING TITLE:	TANK FOUNDATION PLAN AND SECTIONS
REVISIONS:	
SHEET NO:	**S2.0**

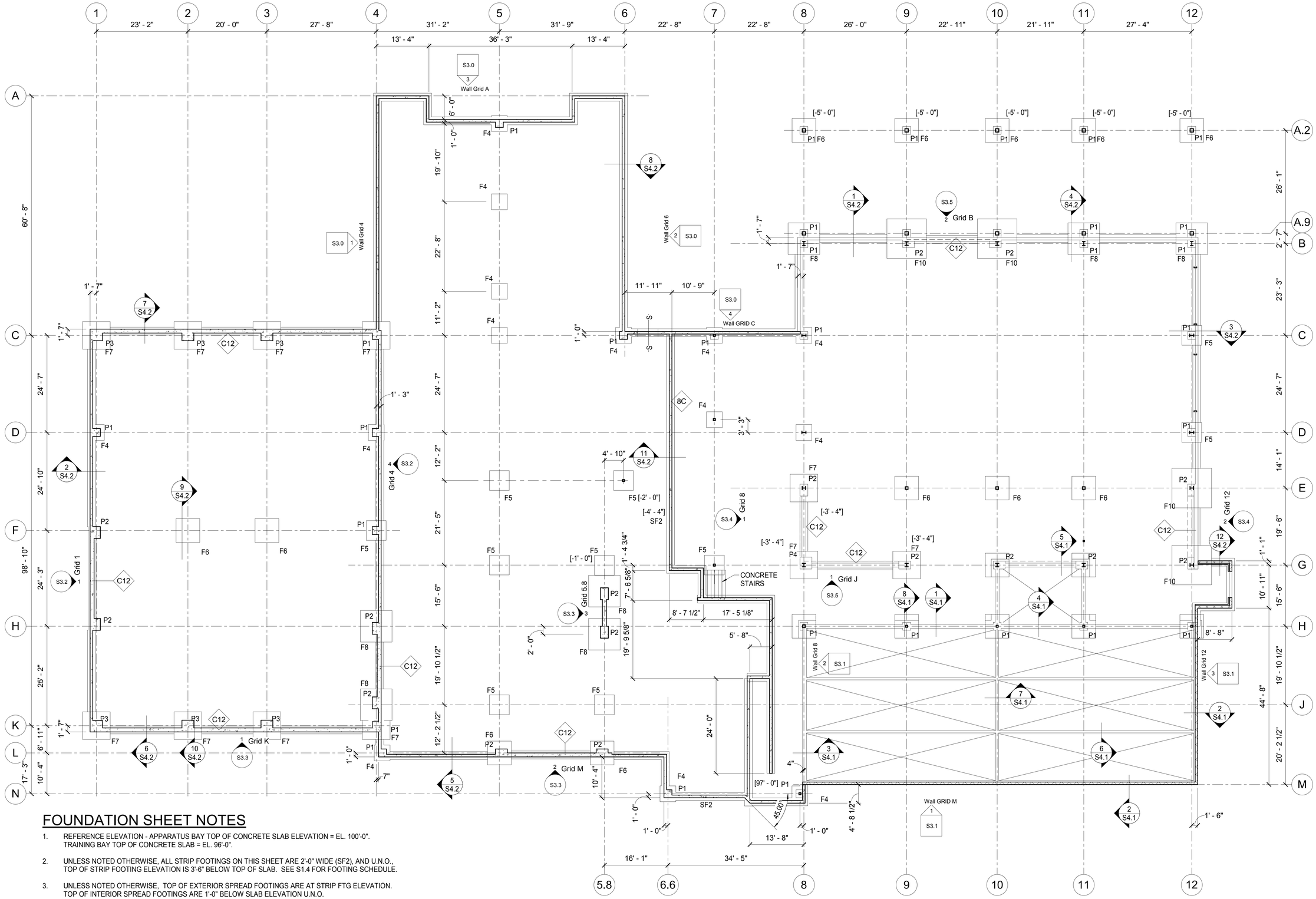

FOUNDATION SHEET NOTES

1. REFERENCE ELEVATION - APPARATUS BAY TOP OF CONCRETE SLAB ELEVATION = EL. 100'-0". TRAINING BAY TOP OF CONCRETE SLAB = EL. 96'-0".
2. UNLESS NOTED OTHERWISE, ALL STRIP FOOTINGS ON THIS SHEET ARE 2'-0" WIDE (SF2), AND U.N.O., TOP OF STRIP FOOTING ELEVATION IS 3'-6" BELOW TOP OF SLAB. SEE S1.4 FOR FOOTING SCHEDULE.
3. UNLESS NOTED OTHERWISE, TOP OF EXTERIOR SPREAD FOOTINGS ARE AT STRIP FTG ELEVATION. TOP OF INTERIOR SPREAD FOOTINGS ARE 1'-0" BELOW SLAB ELEVATION U.N.O.
4. UNLESS NOTED OTHERWISE, TOP OF PIER ELEVATION IS 1'-0" BELOW SLAB ELEVATION. SEE S1.5 FOR PIER SCHEDULE.
5. ALL CONCRETE STEM WALLS THIS SHEET ARE 8" CONC CIP (C8) UNLESS NOTED OTHERWISE.

A FOUNDATION PLAN
3/32" = 1'-0"

STATE OF ALASKA 49TH F. Charles Kenley SE-14476 5.09.18 REGISTERED PROFESSIONAL ENGINEER

Burkhart Croft ARCHITECTS LLC
880 N Street Suite 302 | Anchorage Alaska 99501
T: 907.929.9334 | www.burkhart-croft.com

PND ENGINEERS, INC.
1506 WEST 36th AVENUE
ANCHORAGE, AK, 99503
PH 907.561.1011
WWW.PNDENGINEERS.COM

MATANUSKA-SUSITNA BOROUGH

MSB FIRE STATION 6-2

WASILLA, ALASKA

DATE:	5/09/18
DRAWN:	DNB
CHECKED:	CK
PROJECT:	171121
DRAWING TITLE:	FOUNDATION PLAN
REVISIONS:	
SHEET NO:	S2.1

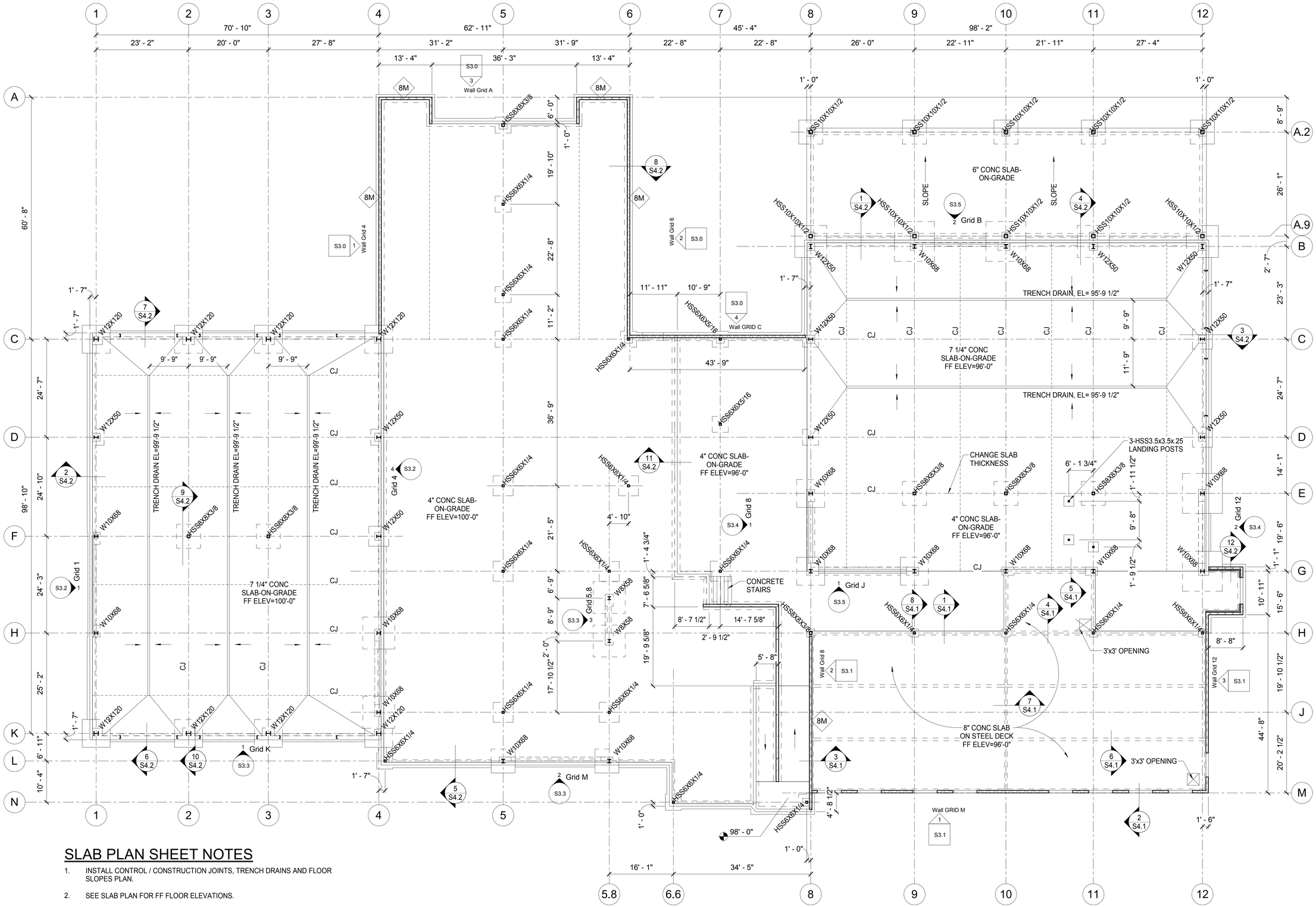

SLAB PLAN SHEET NOTES

1. INSTALL CONTROL / CONSTRUCTION JOINTS, TRENCH DRAINS AND FLOOR SLOPES PLAN.
2. SEE SLAB PLAN FOR FF FLOOR ELEVATIONS.

A SLAB PLAN
3/32" = 1'-0"

STATE OF ALASKA 49TH F. Charles Kenley SE-14476 5.09.18 REGISTERED PROFESSIONAL ENGINEER

Burkhart Croft ARCHITECTS LLC
880 N Street Suite 302 | Anchorage Alaska 99501
T: 907.929.9334 | www.burkhart-croft.com

PND ENGINEERS, INC.
1506 WEST 36th AVENUE
ANCHORAGE, AK, 99503
PH 907.561.1011
WWW.PNDENGINEERS.COM

MATANUSKA-SUSITNA BOROUGH

MSB FIRE STATION 6-2

WASILLA, ALASKA

DATE:	5/09/18
DRAWN:	DNB
CHECKED:	CK
PROJECT:	171121
DRAWING TITLE:	SLAB PLAN
REVISIONS:	3 FMC-003 4-24-2018
SHEET NO:	S2.2

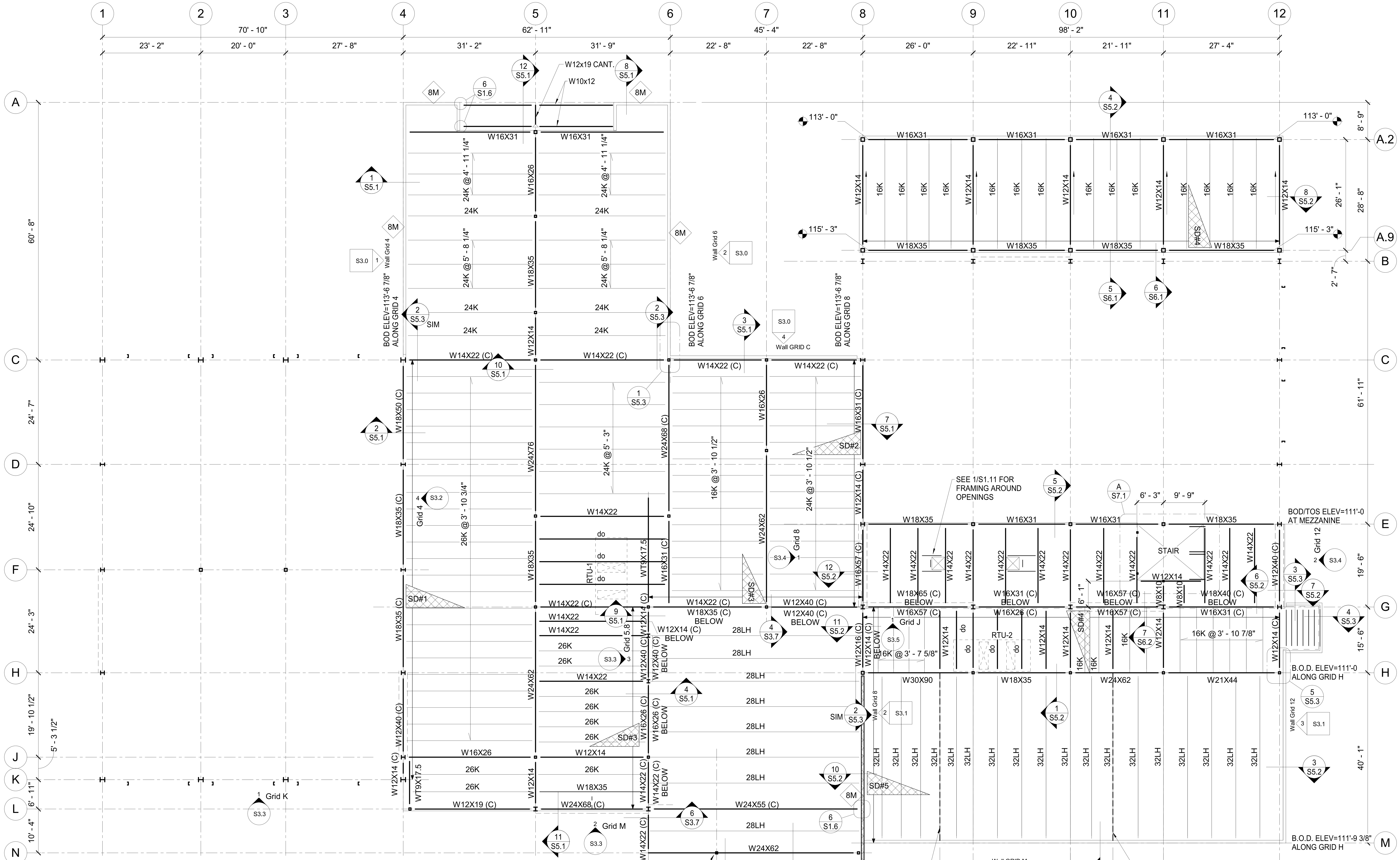

SHEET NOTES

1. FLOOR CONSTRUCTION: CONC. SLAB ON (1 1/2") COMPOSITE METAL DECK. TOTAL THICKNESS = 4". SEE SLAB REINFORCING SCHEDULE FOR SLAB REINFORCING. SEE DECK SCHEDULE FOR DECK FASTENING.

2. TOP OF STEEL (BOTTOM OF DECK) IS SHOWN IN THE PLANS AND DETAILS. FINISHED FLOOR = 108'-0". REFERENCE ELEVATION = APP BAY FINISHED FLOOR ELEVATION = 100'-0".

3. SEE SLAB PLAN FOR COLUMN SIZES.

LEGEND

- INDICATES BOTTOM OF DECK
- INDICATES MOMENT FRAME CONNECTION
- INDICATES BRACED FRAME, SEE ELEVATIONS

A MEZZ FLOOR AND LOW ROOF FRAMING PLAN
3/32" = 1'-0"

STATE OF ALASKA 49TH F. Charles Kenley SE-14476 5.09.18 REGISTERED PROFESSIONAL ENGINEER

Burkhart Croft ARCHITECTS LLC
880 N Street Suite 302 | Anchorage Alaska 99501
T: 907.929.9334 | www.burkhart-croft.com

PND ENGINEERS, INC.
1506 WEST 36th AVENUE
ANCHORAGE, AK, 99503
PH 907.561.1011
WWW.PNDENGINEERS.COM

MATANUSKA-SUSITNA BOROUGH
MSB FIRE STATION 6-2
WASILLA, ALASKA

DATE:	5/09/18
DRAWN:	DNB
CHECKED:	CK
PROJECT:	171121
DRAWING TITLE:	MEZZ FLOOR AND LOW ROOF FRAMING PLAN
REVISIONS:	1 FMC-001 4-24-2018
SHEET NO:	S2.3

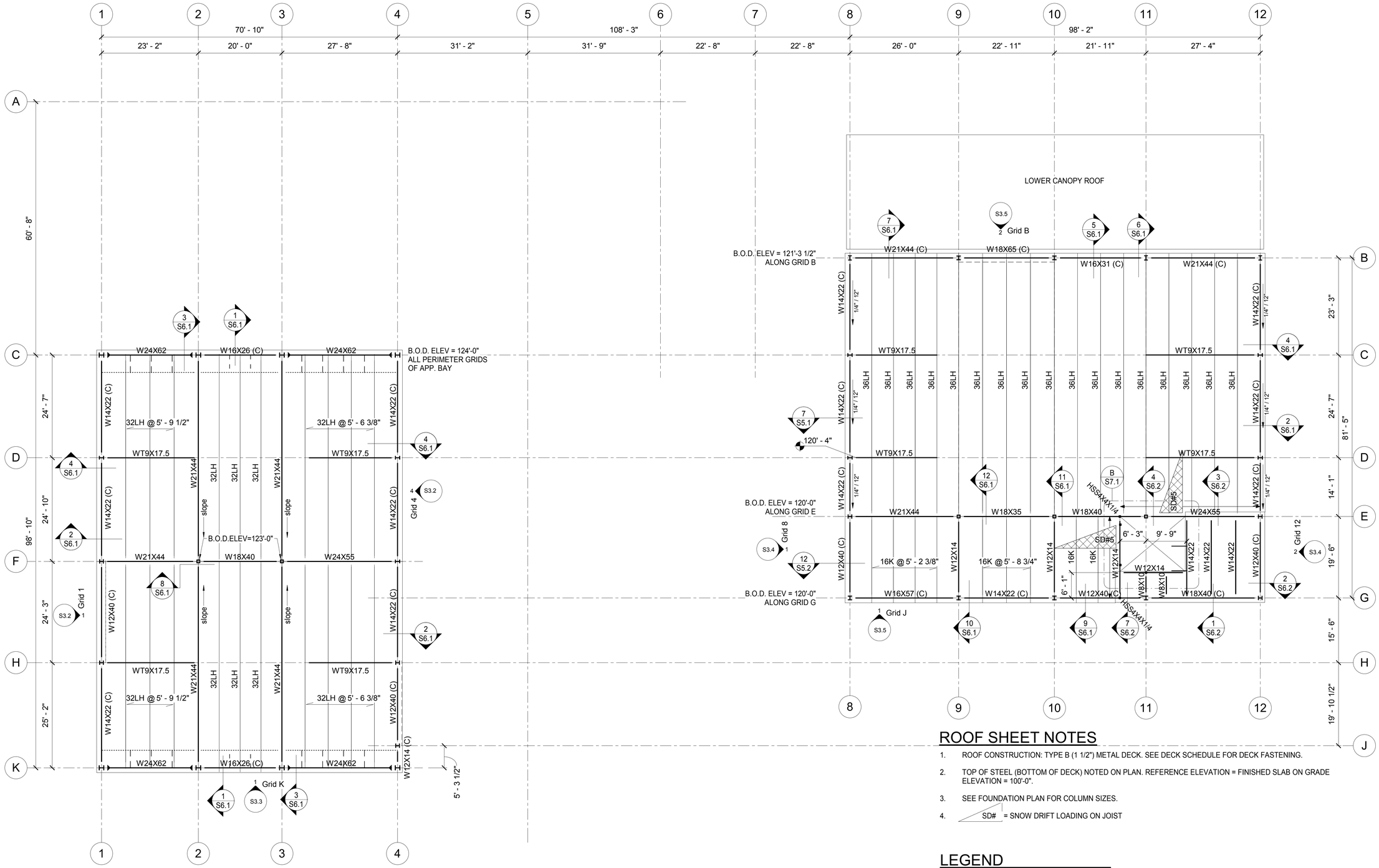

ROOF SHEET NOTES

1. ROOF CONSTRUCTION: TYPE B (1 1/2") METAL DECK. SEE DECK SCHEDULE FOR DECK FASTENING.
2. TOP OF STEEL (BOTTOM OF DECK) NOTED ON PLAN. REFERENCE ELEVATION = FINISHED SLAB ON GRADE ELEVATION = 100'-0".
3. SEE FOUNDATION PLAN FOR COLUMN SIZES.
4. SD# = SNOW DRIFT LOADING ON JOIST

LEGEND

- INDICATES BOTTOM OF DECK
- INDICATES MOMENT FRAME CONNECTION
- INDICATES BRACED FRAME, SEE ELEVATIONS

A HIGH ROOF FRAMING PLAN
3/32" = 1'-0"

STATE OF ALASKA 49TH
F. Charles Kenley
SE-1447
5.09.18
REGISTERED PROFESSIONAL ENGINEER

Burkhart Croft ARCHITECTS LLC
880 N Street Suite 302 | Anchorage Alaska 99501
T: 907.929.9334 | www.burkhart-croft.com

PND ENGINEERS, INC.
1506 WEST 36th AVENUE
ANCHORAGE, AK, 99503
PH 907.561.1011
WWW.PNDENGINEERS.COM

MATANUSKA-SUSITNA BOROUGH

MSB FIRE STATION 6-2

WASILLA, ALASKA

DATE:	5/09/18
DRAWN:	DNB
CHECKED:	CK
PROJECT:	171121
DRAWING TITLE:	HIGH ROOF FRAMING PLAN
REVISIONS:	
SHEET NO:	S2.4

ROOF SHEET NOTES

1. ROOF CONSTRUCTION: TYPE B (1 1/2") METAL DECK. SEE DECK SCHEDULE FOR DECK FASTENING.
2. TOP OF STEEL (BOTTOM OF DECK) NOTED ON PLAN. REFERENCE ELEVATION = FINISHED SLAB ON GRADE ELEVATION = 100'-0".
3. SEE FOUNDATION PLAN FOR COLUMN SIZES.
4. SD# = SNOW DRIFT LOADING ON JOIST

LEGEND

- INDICATES BOTTOM OF DECK
- INDICATES MOMENT FRAME CONNECTION
- INDICATES BRACED FRAME, SEE ELEVATIONS

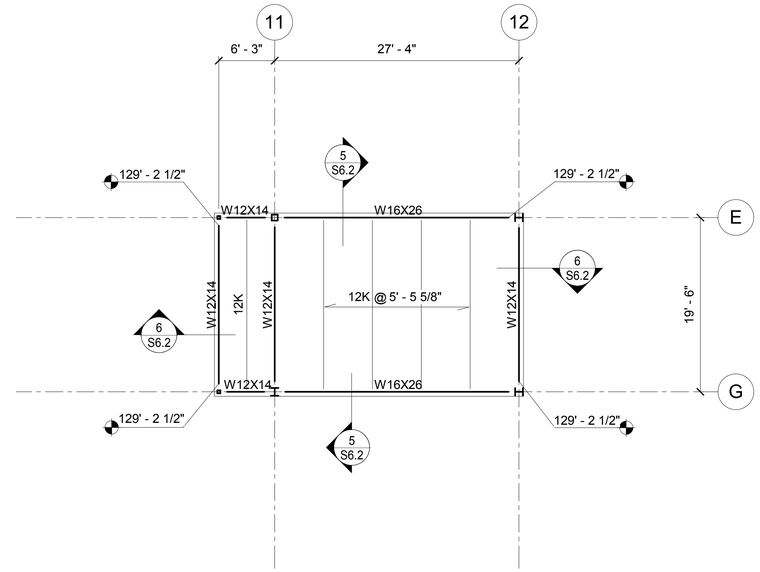

1 CONTROL ROOM ROOF FRAMING PLAN
1/8" = 1'-0"

STATE OF ALASKA
49 TH
F. Charles Kenley
SE-144 76
5.09.18
REGISTERED PROFESSIONAL ENGINEER

Burkhart Croft
ARCHITECTS LLC
880 N Street Suite 302 | Anchorage Alaska 99501
T: 907.929.9334 | www.burkhart-croft.com

P N D
ENGINEERS, INC.
1506 WEST 36th AVENUE
ANCHORAGE, AK, 99503
PH 907.561.1011
WWW.PNDENGINEERS.COM

MATANUSKA-SUSITNA BOROUGH
MSB FIRE STATION 6-2
WASILLA, ALASKA

DATE: 5/09/18
DRAWN: DNB
CHECKED: CK
PROJECT: 171121
DRAWING TITLE:
CONTROL ROOM ROOF FRAMING
REVISIONS:
SHEET NO:
S2.5

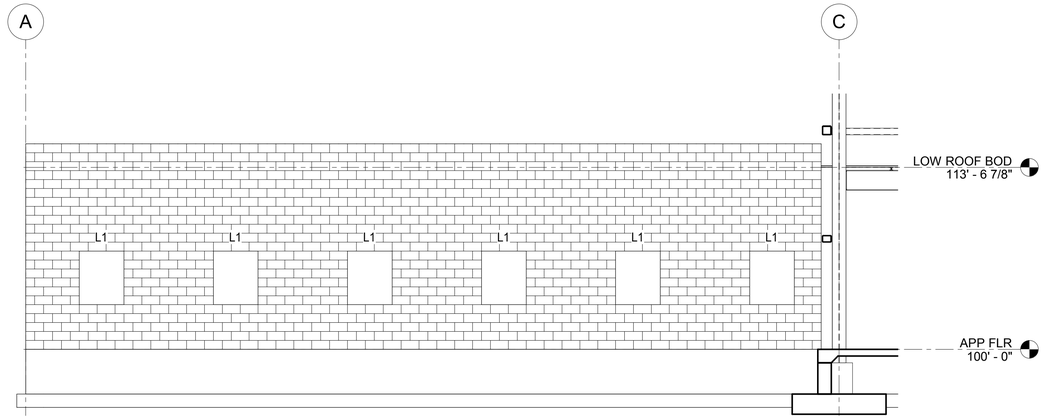

1 Wall Grid 4
3/16" = 1'-0"

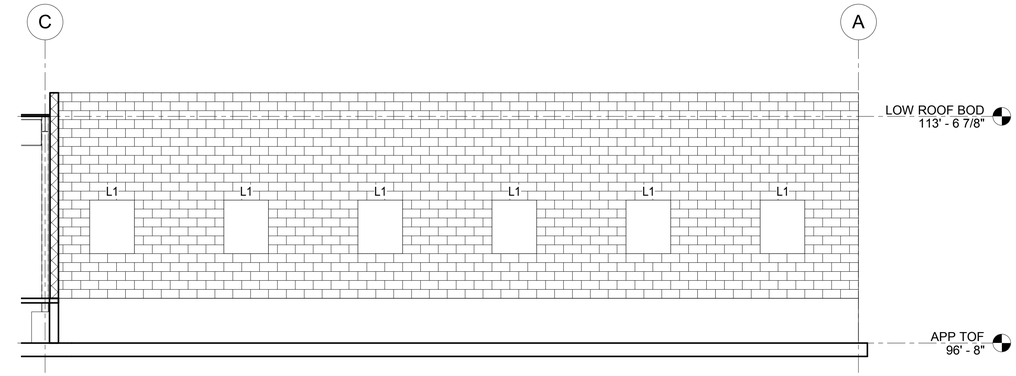

2 Wall Grid 6
3/16" = 1'-0"

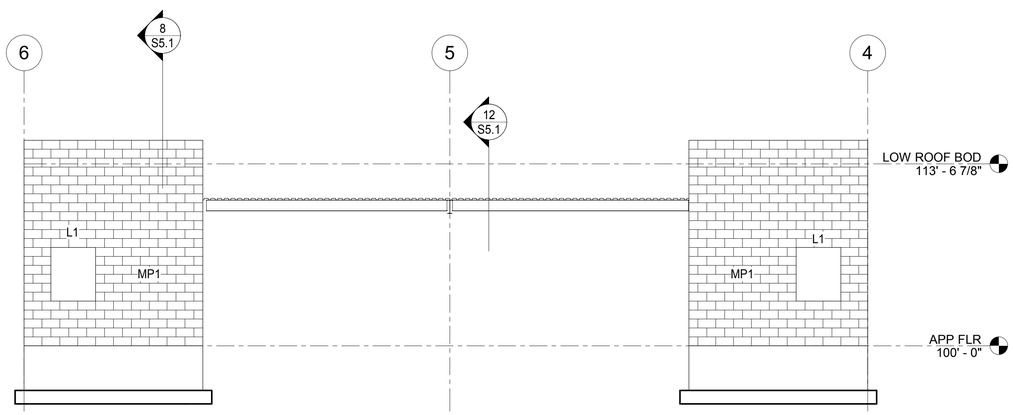

3 Wall Grid A
3/16" = 1'-0"

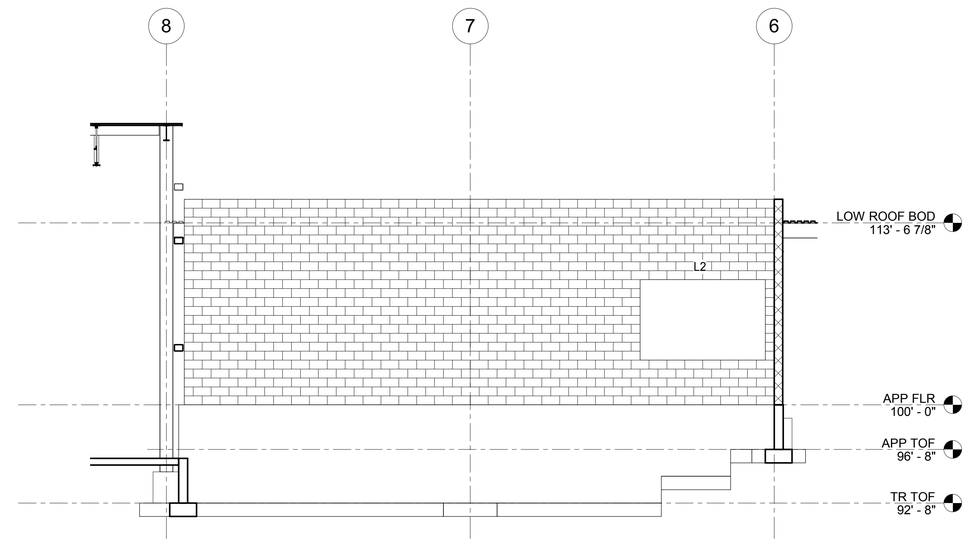

4 Wall GRID C
3/16" = 1'-0"

STATE OF ALASKA
49 TH
F. Charles Kenley
SE-1447
5.09.18
REGISTERED PROFESSIONAL ENGINEER

Burkhart Croft
ARCHITECTS LLC
880 N Street Suite 302 | Anchorage Alaska 99501
T: 907.929.9334 | www.burkhart-croft.com

P N D
ENGINEERS, INC.
1506 WEST 36th AVENUE
ANCHORAGE, AK, 99503
PH 907.561.1011
WWW.PNDENGINEERS.COM

MATANUSKA-SUSITNA BOROUGH

MSB FIRE STATION 6-2

WASILLA, ALASKA

DATE:	5/09/18
DRAWN:	DNB
CHECKED:	CK
PROJECT:	171121
DRAWING TITLE:	CMU WALL ELEVATIONS
REVISIONS:	
SHEET NO:	**S3.0**

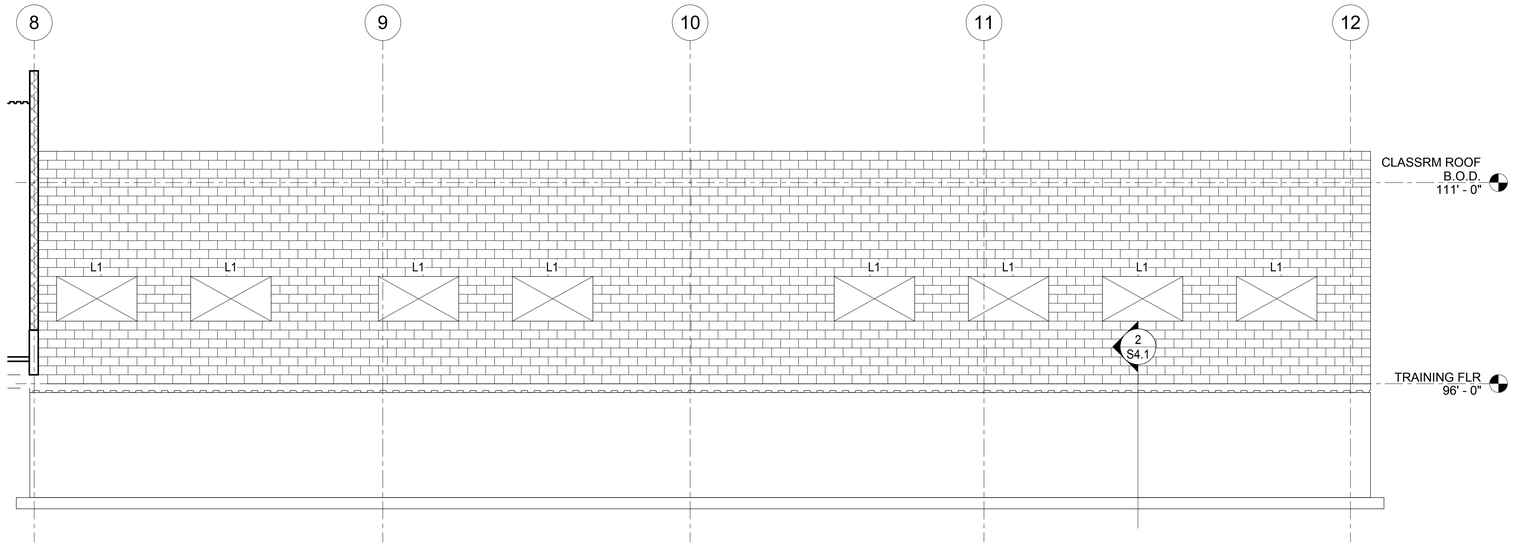

1 Wall GRID M
3/16" = 1'-0"

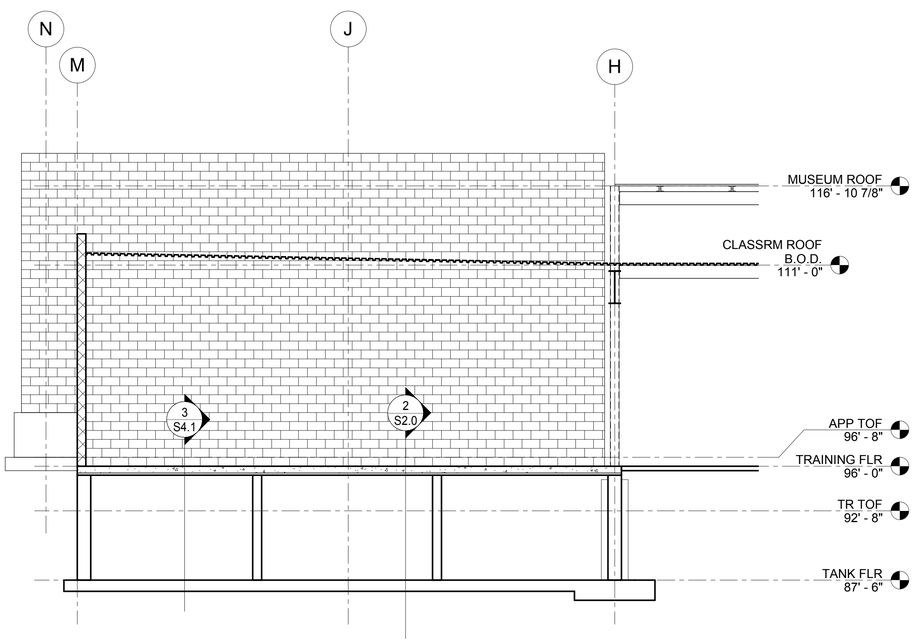

2 Wall Grid 8
3/16" = 1'-0"

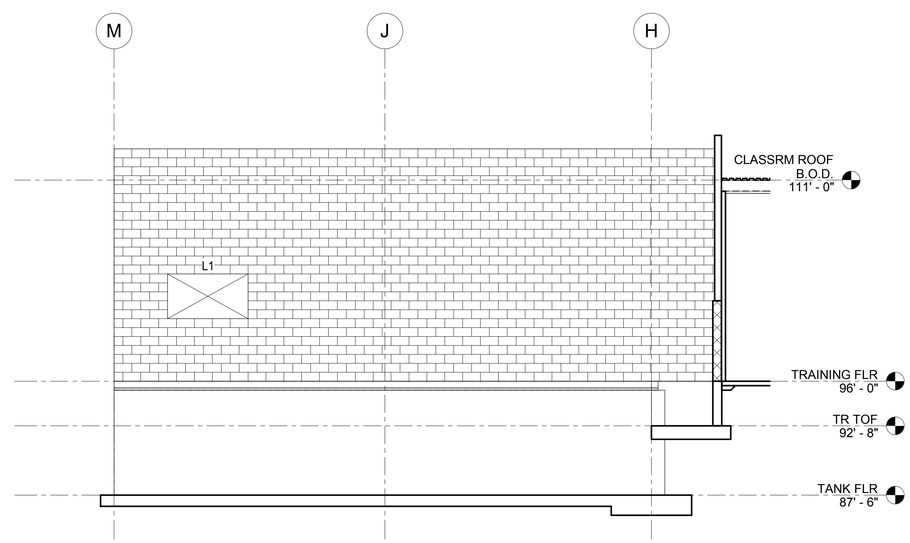

3 Wall Grid 12
3/16" = 1'-0"

STATE OF ALASKA
49 TH
F. Charles Kenley
SE-1447
5.09.18
REGISTERED PROFESSIONAL ENGINEER

Burkhart Croft
ARCHITECTS LLC
880 N Street Suite 302 | Anchorage Alaska 99501
T: 907.929.9334 | www.burkhart-croft.com

P N D
ENGINEERS, INC.
1506 WEST 36th AVENUE
ANCHORAGE, AK, 99503
PH 907.561.1011
WWW.PNDENGINEERS.COM

MATANUSKA-SUSITNA BOROUGH

MSB FIRE STATION 6-2

WASILLA, ALASKA

DATE: 5/09/18

DRAWN: DNB

CHECKED: CK

PROJECT: 171121

DRAWING TITLE:
CMU WALL ELEVATIONS

REVISIONS:

SHEET NO:

S3.1

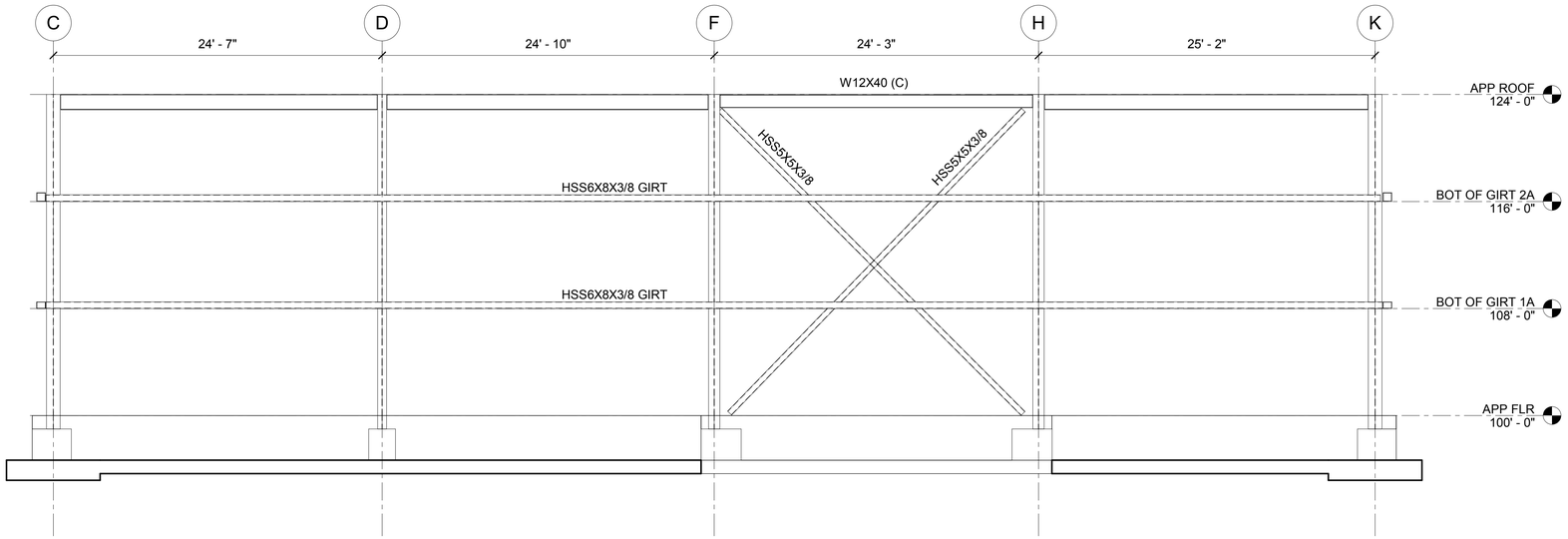

1 Grid 1
3/16" = 1'-0"

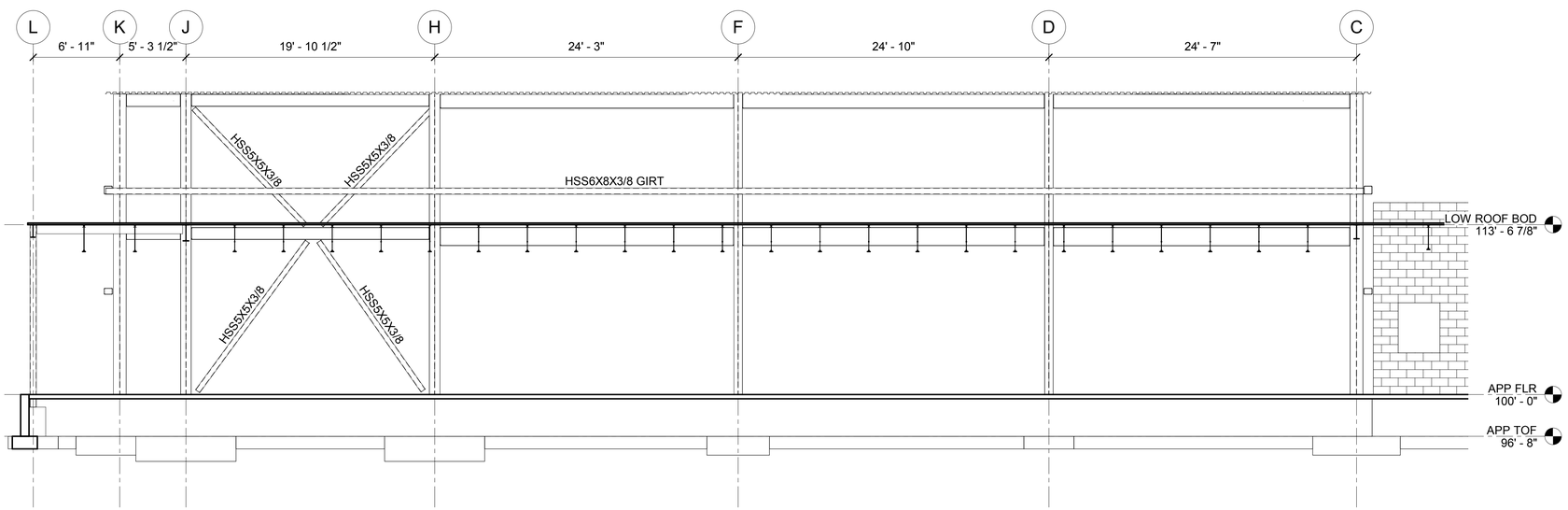

4 Grid 4
3/16" = 1'-0"

STATE OF ALASKA
49 TH
F. Charles Kenley
SE-1447
5-09-18
REGISTERED PROFESSIONAL ENGINEER

Burkhart Croft
ARCHITECTS LLC
880 N Street Suite 302 | Anchorage Alaska 99501
T: 907.929.9334 | www.burkhart-croft.com

PND
ENGINEERS, INC.
1506 WEST 36th AVENUE
ANCHORAGE, AK, 99503
PH 907.561.1011
WWW.PNDENGINEERS.COM

MATANUSKA-SUSITNA BOROUGH

MSB FIRE STATION 6-2

WASILLA, ALASKA

DATE: 5/09/18
DRAWN: DNB
CHECKED: CK
PROJECT: 171121
DRAWING TITLE:
FRAME ELEVATIONS

REVISIONS:

SHEET NO:
S3.2

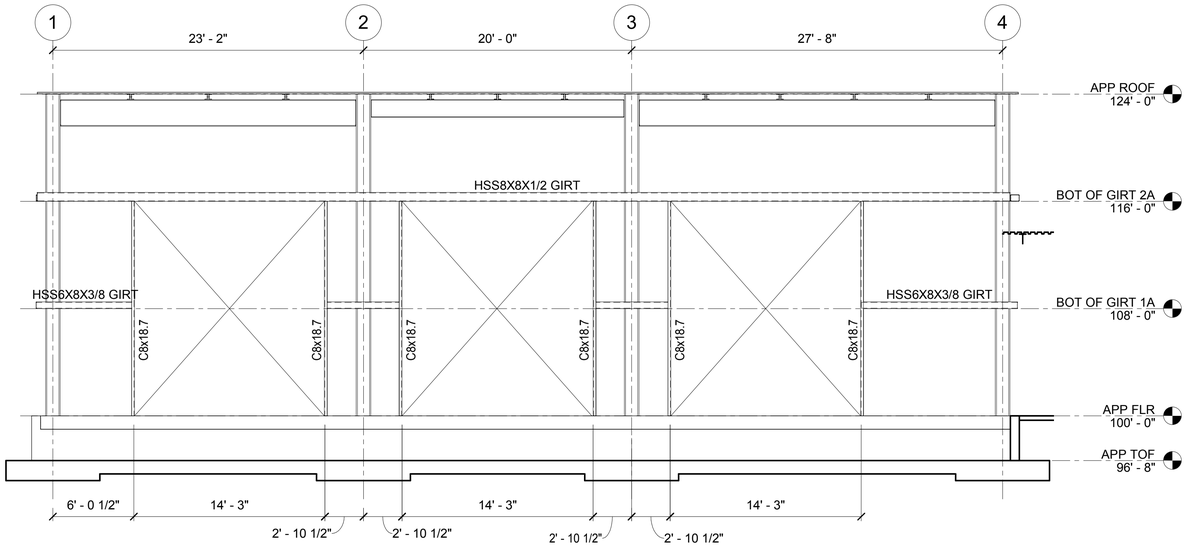

1 Grid K
3/16" = 1'-0"

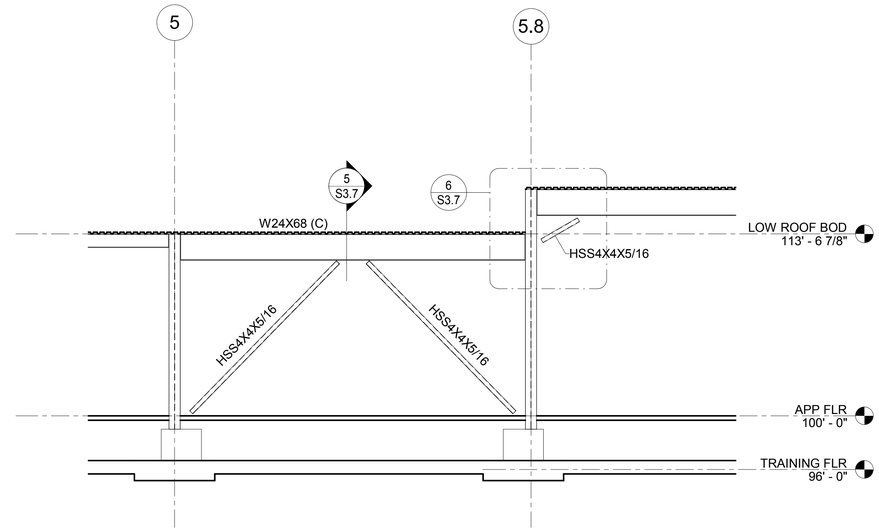

2 Grid M
3/16" = 1'-0"

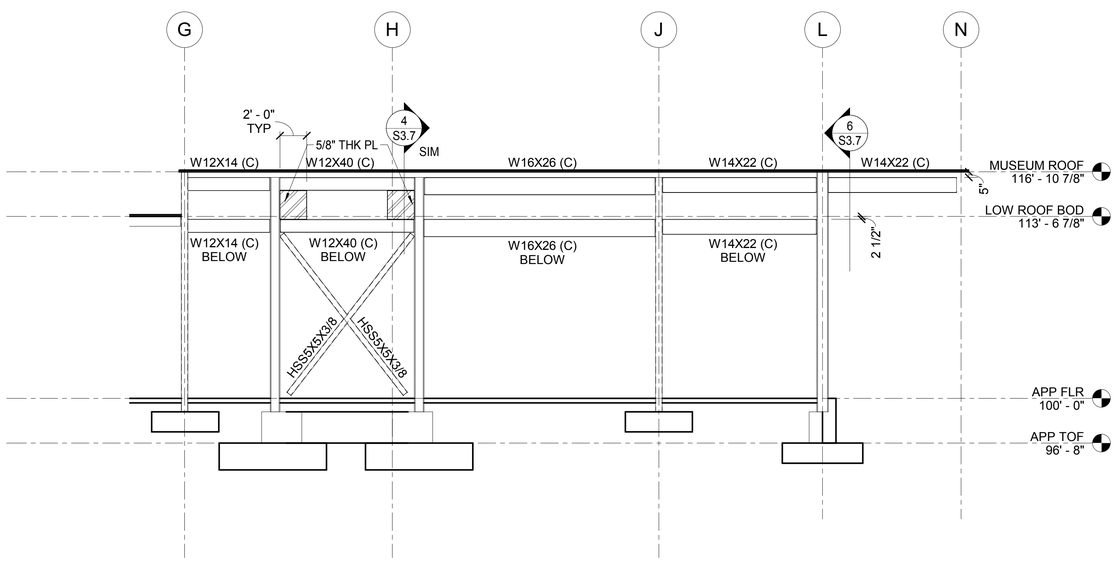

3 Grid 5.8
3/16" = 1'-0"

STATE OF ALASKA
49 TH
F. Charles Kenley
SE-1447
5.09.18
REGISTERED PROFESSIONAL ENGINEER

Burkhart Croft
ARCHITECTS LLC
880 N Street Suite 302 | Anchorage Alaska 99501
T: 907.929.9334 | www.burkhart-croft.com

P N D
ENGINEERS, INC.
1506 WEST 36th AVENUE
ANCHORAGE, AK, 99503
PH 907.561.1011
WWW.PNDENGINEERS.COM

MATANUSKA-SUSITNA BOROUGH

MSB FIRE STATION 6-2

WASILLA, ALASKA

DATE:	5/09/18
DRAWN:	DNB
CHECKED:	CK
PROJECT:	171121
DRAWING TITLE:	FRAME ELEVATIONS
REVISIONS:	
SHEET NO:	**S3.3**

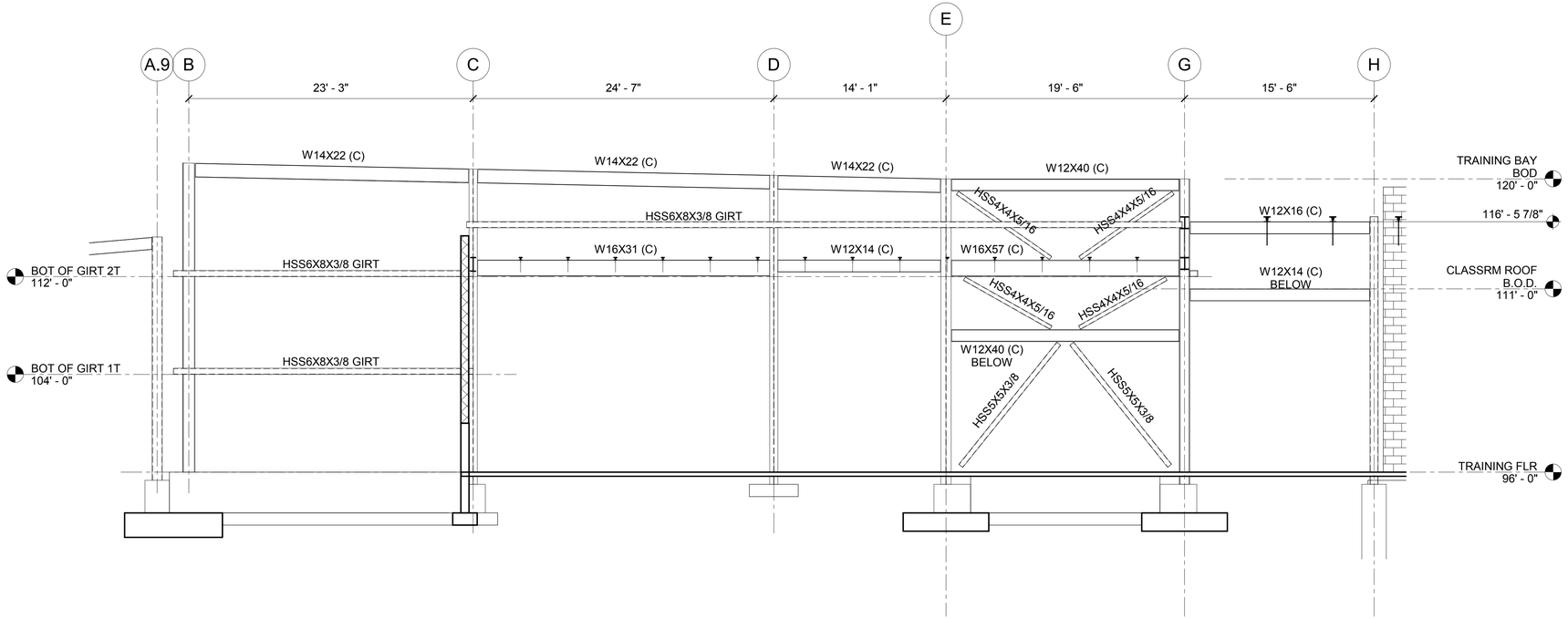

1 Grid 8
3/16" = 1'-0"

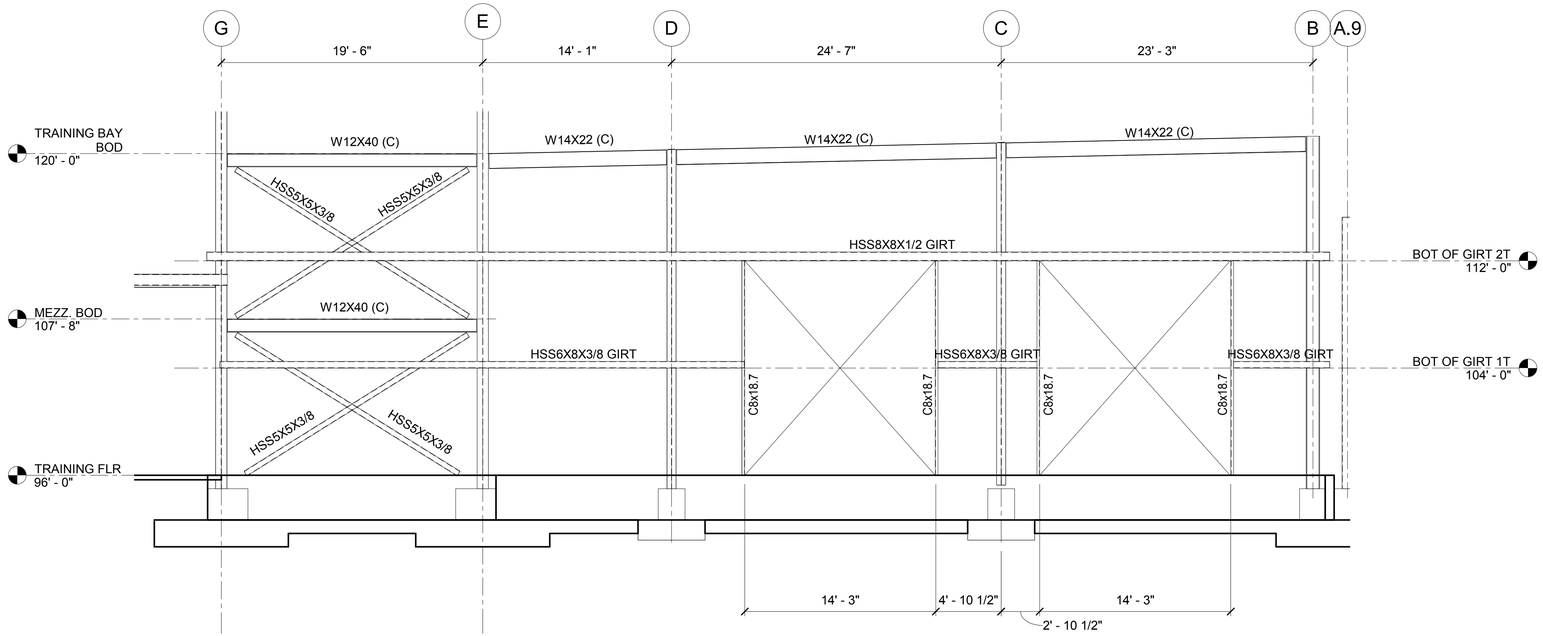

2 Grid 12
3/16" = 1'-0"

STATE OF ALASKA
49 TH
F. Charles Kenley
SE-1447
5.09.18
REGISTERED PROFESSIONAL ENGINEER

Burkhart Croft
ARCHITECTS LLC
880 N Street Suite 302 | Anchorage Alaska 99501
T: 907.929.9334 | www.burkhart-croft.com

P N D
ENGINEERS, INC.
1506 WEST 36th AVENUE
ANCHORAGE, AK, 99503
PH 907.561.1011
WWW.PNDENGINEERS.COM

MATANUSKA-SUSITNA BOROUGH

MSB FIRE STATION 6-2

WASILLA, ALASKA

DATE:	5/09/18
DRAWN:	DNB
CHECKED:	CK
PROJECT:	171121
DRAWING TITLE:	FRAME ELEVATIONS
REVISIONS:	
SHEET NO:	S3.4

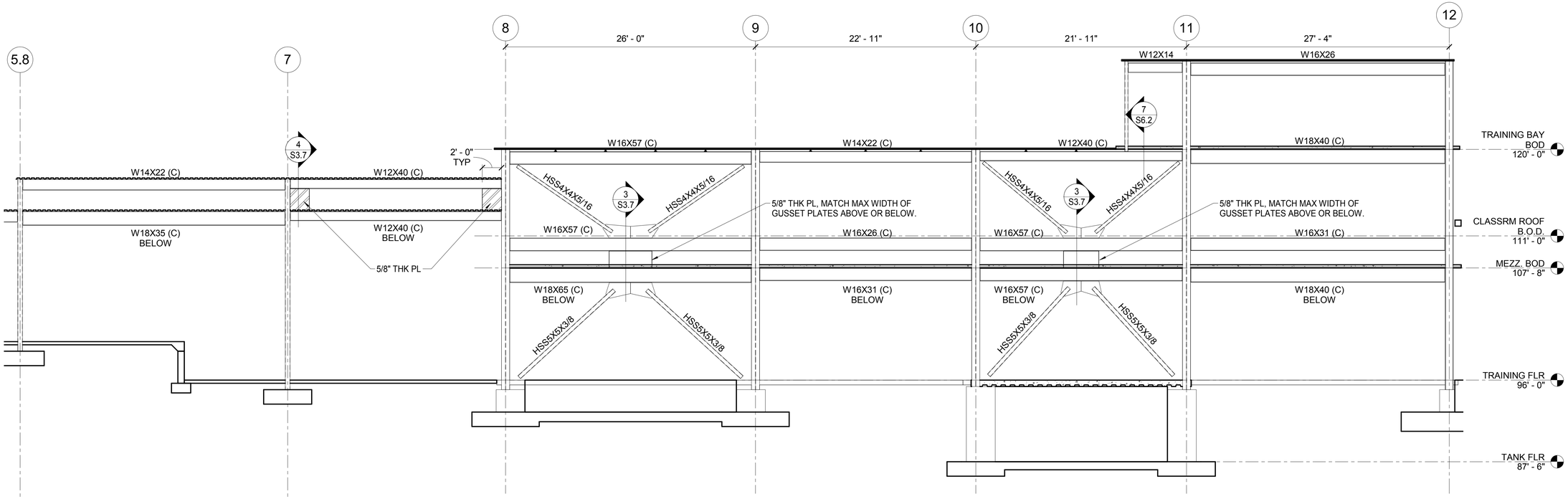

1 Grid J
3/16" = 1'-0"

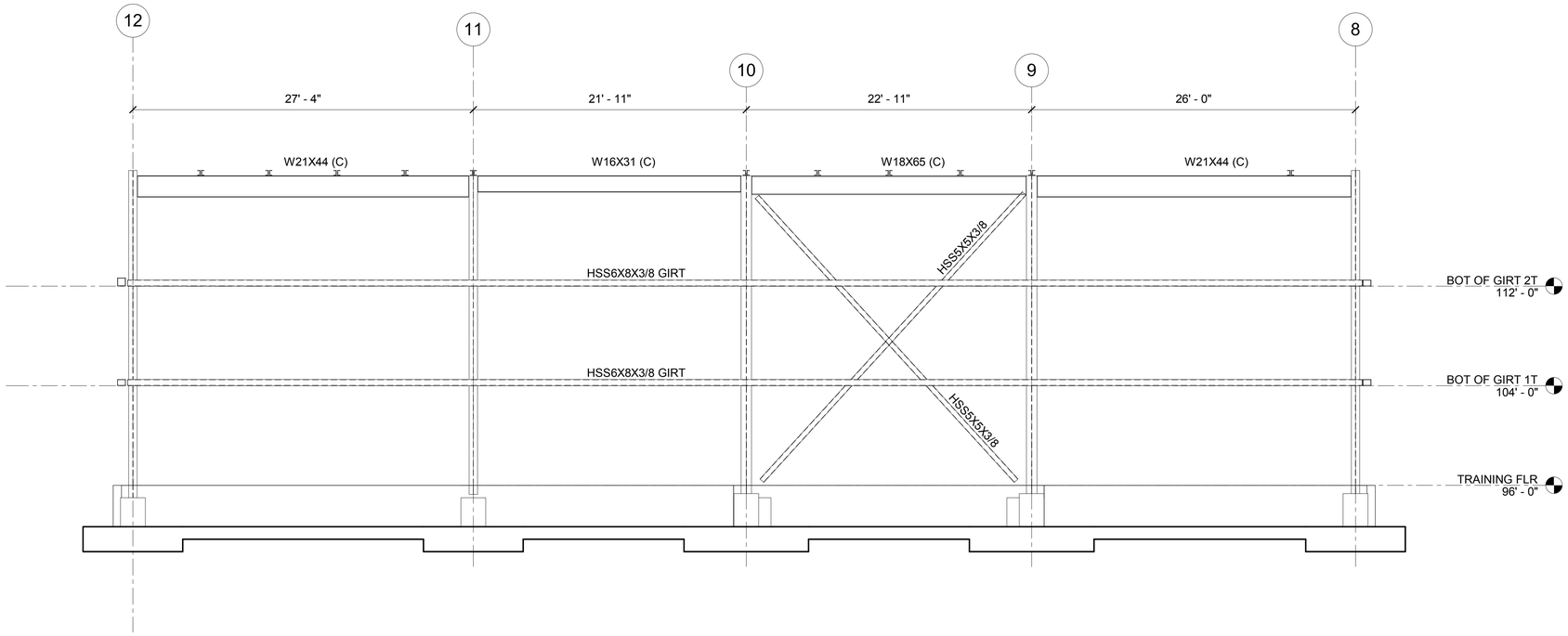

2 Grid B
3/16" = 1'-0"

STATE OF ALASKA
49 TH
F. Charles Kenley
SE-1447
5.09.18
REGISTERED PROFESSIONAL ENGINEER

Burkhart Croft
ARCHITECTS LLC
880 N Street Suite 302 | Anchorage Alaska 99501
T: 907.929.9334 | www.burkhart-croft.com

P N D
ENGINEERS, INC.
1506 WEST 36th AVENUE
ANCHORAGE, AK, 99503
PH 907.561.1011
WWW.PNDENGINEERS.COM

MATANUSKA-SUSITNA BOROUGH

MSB FIRE STATION 6-2

WASILLA, ALASKA

DATE:	5/09/18
DRAWN:	DNB
CHECKED:	CK
PROJECT:	171121
DRAWING TITLE:	FRAME ELEVATIONS
REVISIONS:	
SHEET NO:	**S3.5**

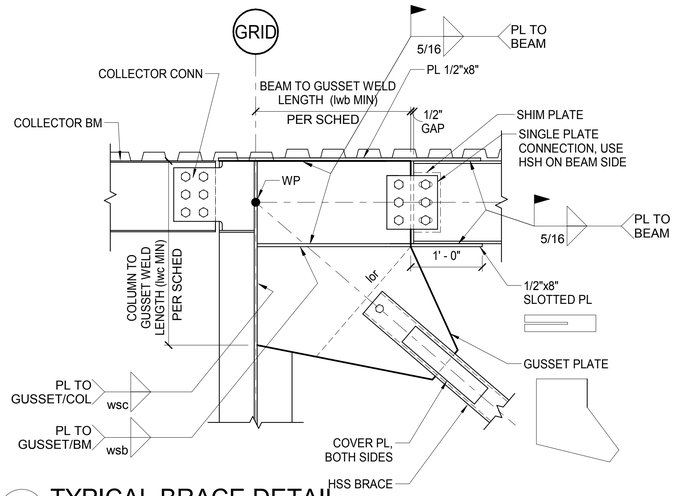

1 TYPICAL BRACE DETAIL
1" = 1'-0"

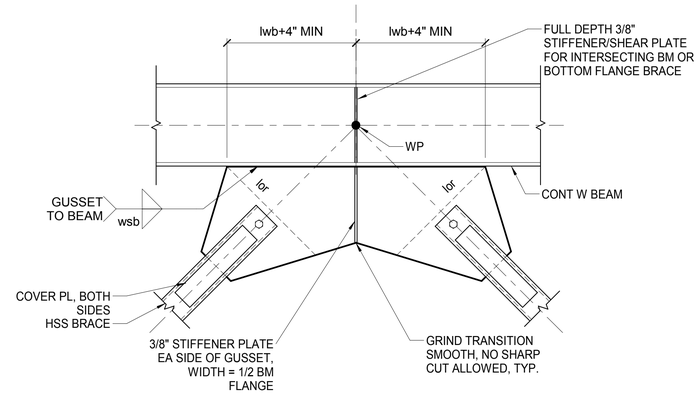

2 TYPICAL BRACE DETAIL
1" = 1'-0"

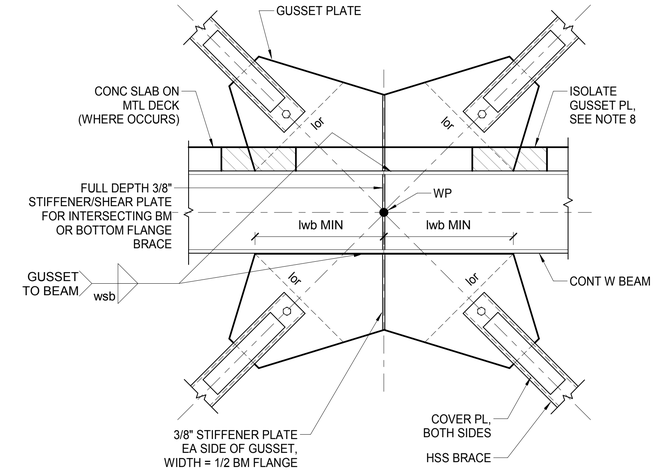

3 TYPICAL BRACE DETAIL
1" = 1'-0"

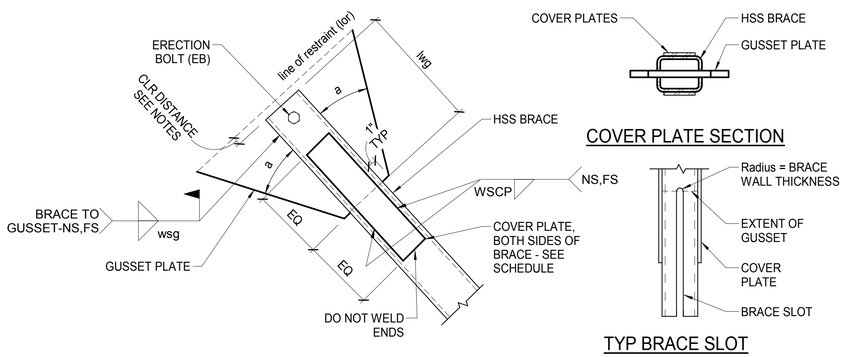

4 TYP BRACE CONNECTION
1 1/2" = 1'-0"

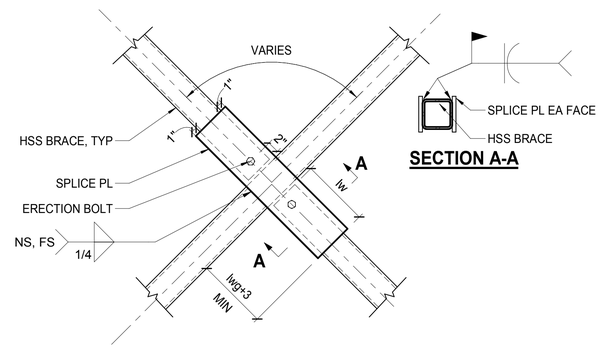

SCBF BRACE SPLICE SCHEDULE

BRACE SIZE	SPLICE PL	WELD LENGTH (lw)
HSS4x4x5/16	5/8"t	1'-2"
HSS5x5x3/8	3/4"t	1'-4"

5 TYPICAL X-BRACE SPLICE DETAILS
1" = 1'-0"

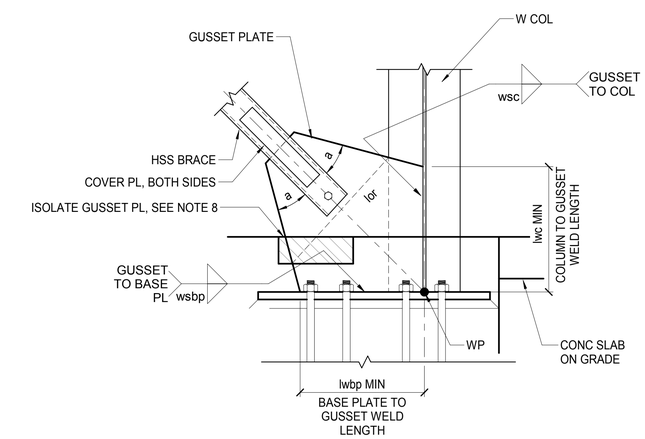

6 TYPICAL BRACE DETAIL AT BASE PL
1" = 1'-0"

SCBF BRACE PROTECTED ZONES

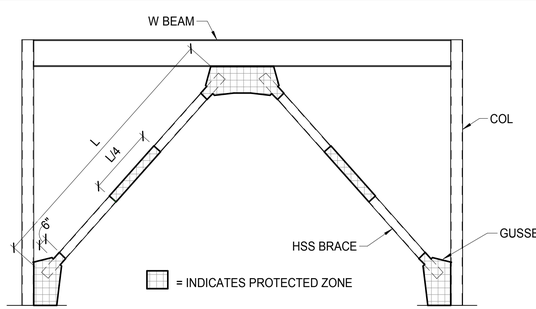

NOTES:
1. DISCONTINUITIES CREATED BY FABRICATION OR ERECTION OPERATIONS, SUCH AS TACK WELDS, ERECTION AIDS, AIR-ARC GOUGING AND THERMAL CUTTING SHALL BE REPAIRED AS REQUIRED BY THE ENGINEER.
2. WELDED, BOLTED, SCREWED OR SHOT-IN ATTACHMENTS FOR BUILDING COMPONENTS SHALL NOT BE PLACED WITHIN THE PROTECTED ZONES.
3. "L" FOR SINGLE-STORY X-BRACES IS FROM GUSSET TO BRACE INTERSECTION.

SCBF BRACE CONNECTION SCHEDULE

BRACE SIZE	BRACE COVER PLATE SIZE	BRACE TO COVER PLATE WELD	GUSSET PLATE	GUSSET TO BRACE WELD		GUSSET TO COLUMN WELD		GUSSET TO BEAM WELD		GUSSET TO BASE PLATE WELD	
		SIZE, wscp	THICKNESS, t	LENGTH, lwg MIN	SIZE, wsg	LENGTH, lwc MIN	SIZE, wsc	LENGTH, lwb MIN	SIZE, wsb	LENGTH, lwbp MIN	SIZE, wsbp
HSS4x4x5/16	3/8" x 3" x 1'-4"	3/16"	5/8"	1'-0"	5/16"	1'-4".	3/8"	1'-6"	3/8"	1'-4"	3/8"
HSS5x5x3/8	1/2" x 3" x 1'-4"	1/4"	5/8"	1'-4"	5/16"	1'-4"	1/2"	1'-6"	1/2"	1'-6"	1/2"

NOTES:
1. SLOT ALL BRACES AT CENTERLINE TO RECEIVE GUSSET PLATES.
2. A CLEAR DISTANCE OF 2x (t) SHALL BE MAINTAINED BETWEEN THE END OF THE BRACE AND THE LINE OF RESTRAINT (LOR). LOR IS PERPENDICULAR TO GUSSET CENTERLINE.
3. PROVIDE A SINGLE 3/4" ERECTION BOLT FOR EACH BRACE 2-1/2" FROM BRACE END.
4. STEEL DETAILER TO PROVIDE TO-SCALE DRAWINGS OF ALL BRACE CONNECTIONS IN THE STRUCTURE FOR APPROVAL. TOP OF CONCRETE ELEVATIONS SHALL BE INDICATED WHERE APPLICABLE.
5. GUSSET PLATE MATERIAL IS ASTM A572, GRADE 50.
6. STIFFENER PLATES ARE 3/8" THICK AND ARE ON BOTH SIDES OF THE BEAM WEB OR GUSSET.
7. ANGLE a = 22 TO 30 DEGREES.
8. BLOCK OUT SLAB WITH RIGID INSULATION 2" EACH SIDE OF GUSSET PLATE.

STATE OF ALASKA 49TH F. Charles Kenley SE-1447 5.09.18 REGISTERED PROFESSIONAL ENGINEER

Burkhart Croft ARCHITECTS LLC
880 N Street Suite 302 | Anchorage Alaska 99501
T: 907.929.9334 | www.burkhart-croft.com

PND ENGINEERS, INC.
1506 WEST 36th AVENUE
ANCHORAGE, AK, 99503
PH 907.561.1011
WWW.PNDENGINEERS.COM

MATANUSKA-SUSITNA BOROUGH

MSB FIRE STATION 6-2

WASILLA, ALASKA

DATE: 5/09/18
DRAWN: DNB
CHECKED: CK
PROJECT: 171121
DRAWING TITLE: TYPICAL BRACE FRAME CONNECTIONS
REVISIONS:
SHEET NO: **S3.6**

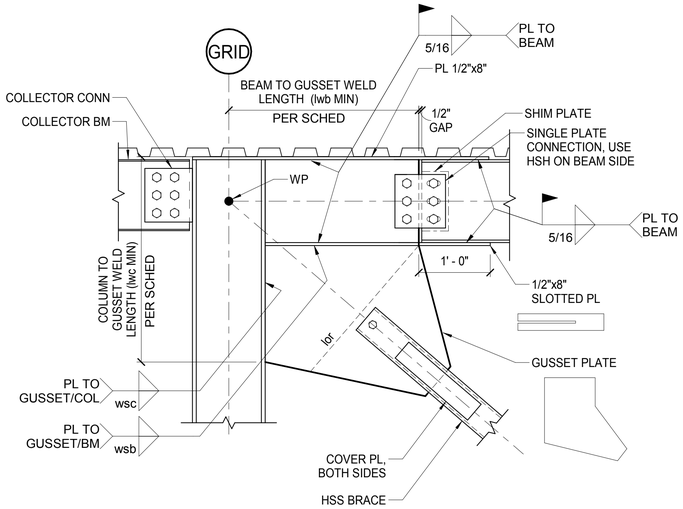

1 TYPICAL BRACE DETAIL
1" = 1'-0"

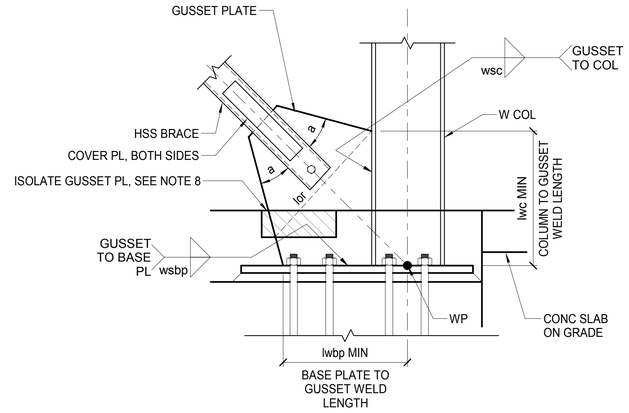

2 TYPICAL BRACE DETAIL AT BASE PL
1" = 1'-0"

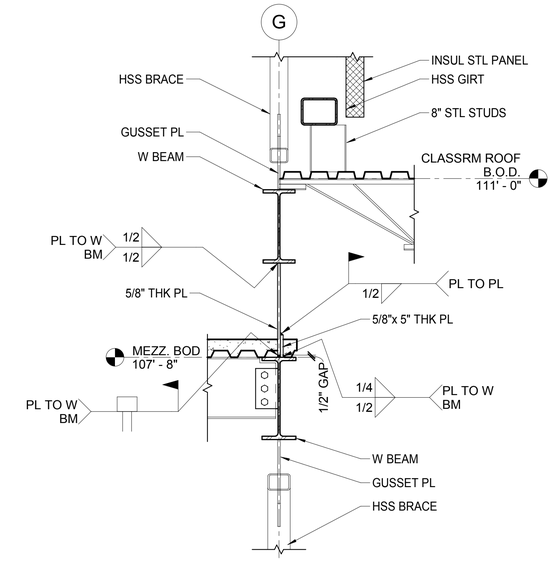

3 SECTION
3/4" = 1'-0"

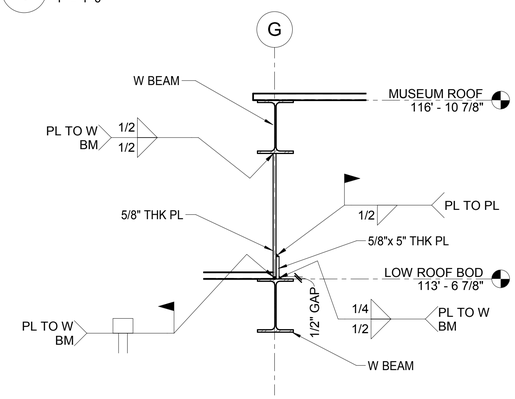

4 SECTION
3/4" = 1'-0"

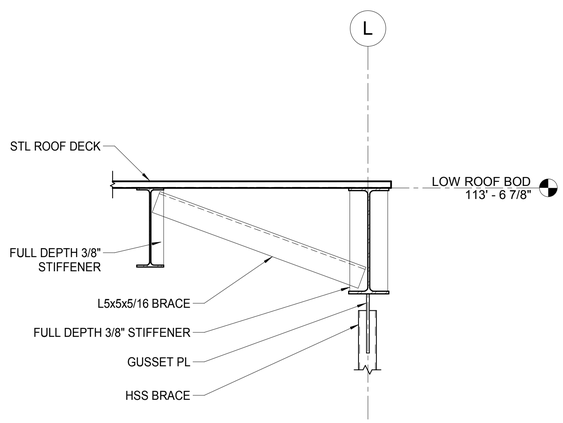

5 SECTION
3/4" = 1'-0"

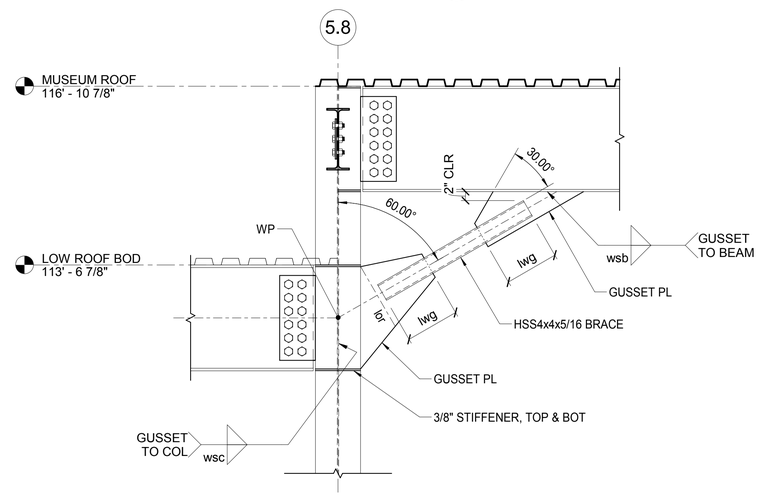

6 SECTION
3/4" = 1'-0"

STATE OF ALASKA
49 TH
F. Charles Kenley
SE-1447
5.09.18
REGISTERED PROFESSIONAL ENGINEER

Burkhart Croft
ARCHITECTS LLC
880 N Street Suite 302 | Anchorage Alaska 99501
T: 907.929.9334 | www.burkhart-croft.com

PND
ENGINEERS, INC.
1506 WEST 36th AVENUE
ANCHORAGE, AK, 99503
PH 907.561.1011
WWW.PNDENGINEERS.COM

MATANUSKA-SUSITNA BOROUGH

MSB FIRE STATION 6-2

WASILLA, ALASKA

DATE:	5/09/18
DRAWN:	DNB
CHECKED:	CK
PROJECT:	171121
DRAWING TITLE:	TYPICAL BRACE FRAME CONNECTIONS
REVISIONS:	
SHEET NO:	**S3.7**

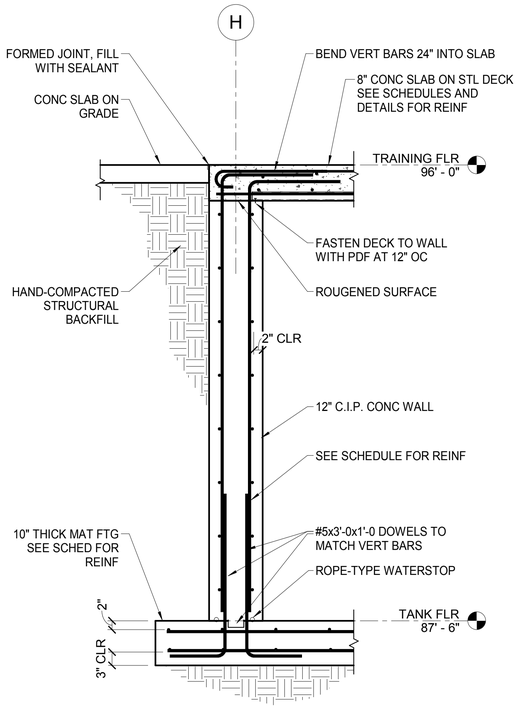

1 TANK WALL SECTION
3/4" = 1'-0"

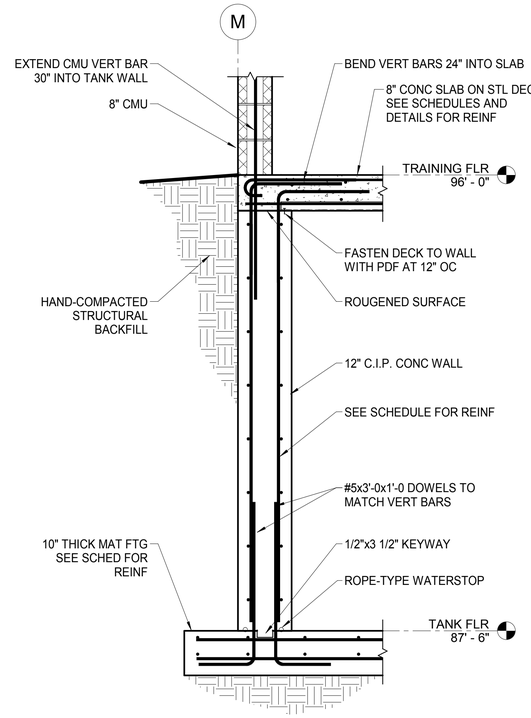

2 TANK WALL SECTION
3/4" = 1'-0"

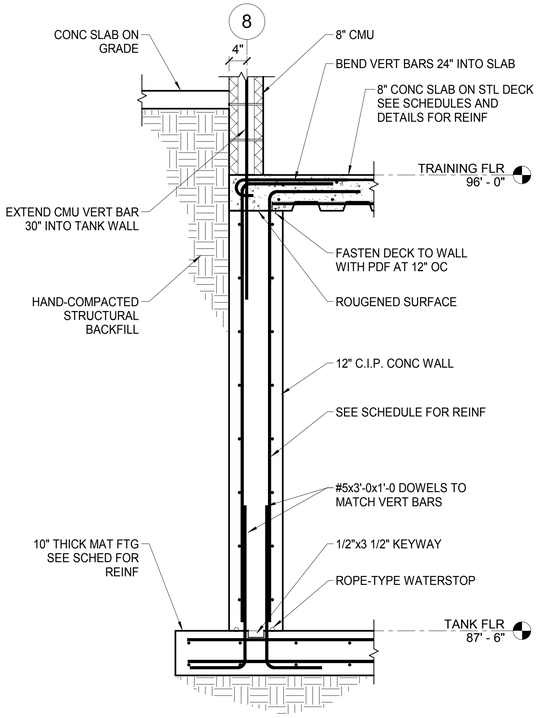

3 TANK WALL SECTION
3/4" = 1'-0"

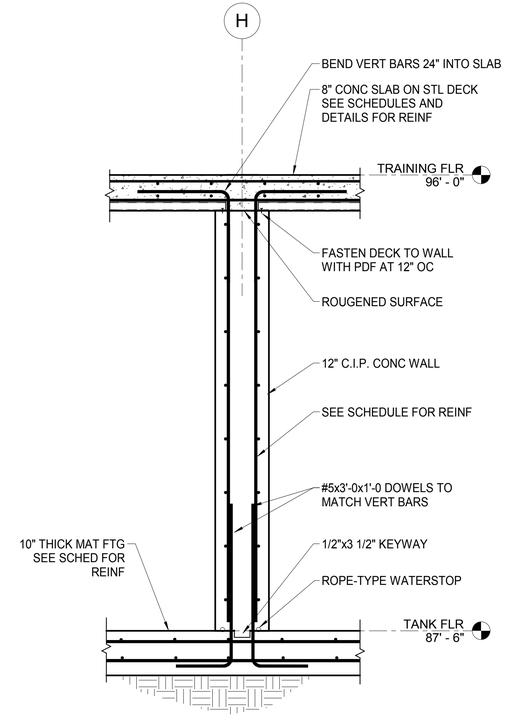

4 TANK WALL SECTION
3/4" = 1'-0"

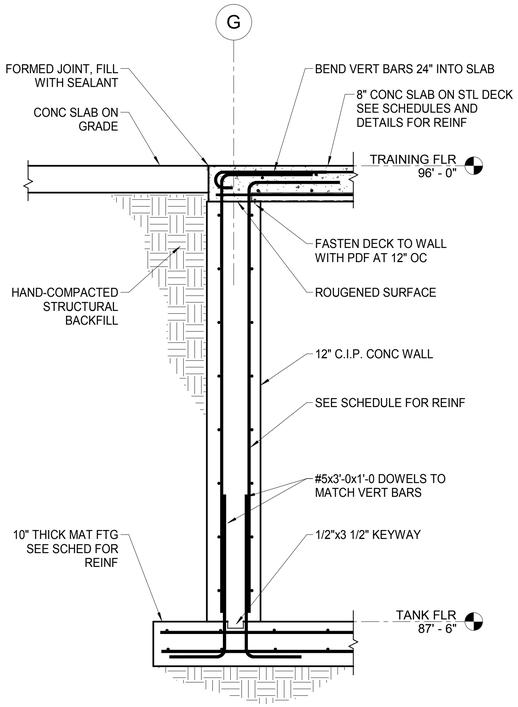

5 TANK WALL SECTION
3/4" = 1'-0"

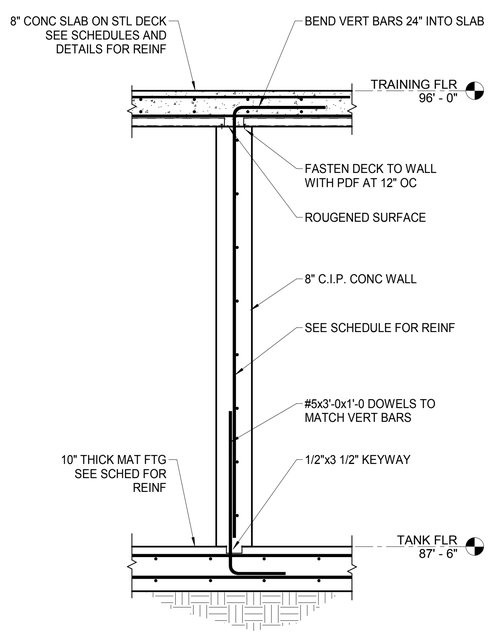

6 TANK WALL SECTION
3/4" = 1'-0"

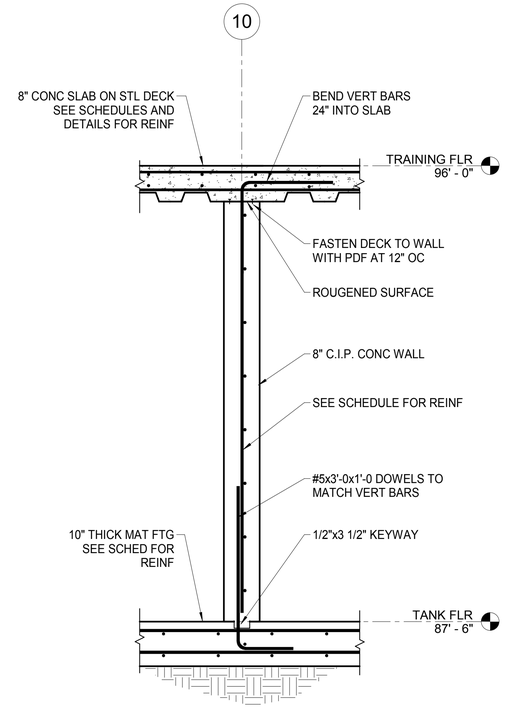

7 TANK WALL SECTION
3/4" = 1'-0"

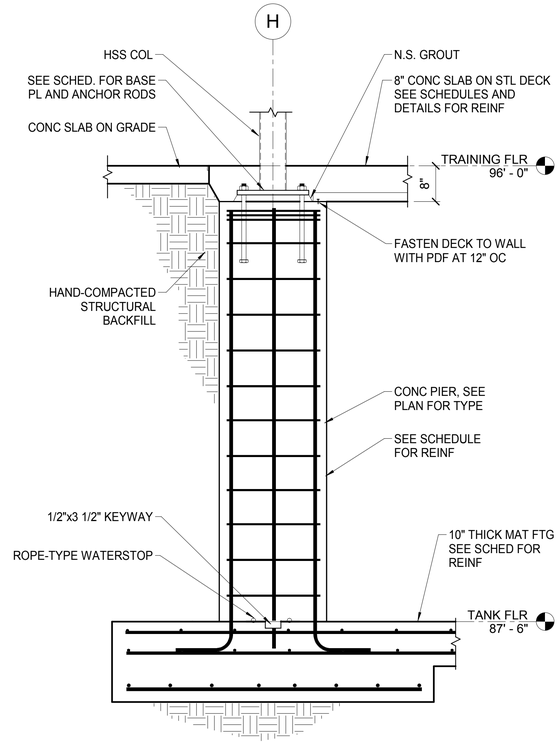

8 TANK WALL SECTION
3/4" = 1'-0"

STATE OF ALASKA
49TH
F. Charles Kenley
SE-1447
5.09.18
REGISTERED PROFESSIONAL ENGINEER

Burkhart Croft ARCHITECTS LLC
880 N Street Suite 302 | Anchorage Alaska 99501
T: 907.929.9334 | www.burkhart-croft.com

P N D ENGINEERS, INC.
1506 WEST 36th AVENUE
ANCHORAGE, AK, 99503
PH 907.561.1011
WWW.PNDENGINEERS.COM

MATANUSKA-SUSITNA BOROUGH

MSB FIRE STATION 6-2

WASILLA, ALASKA

DATE: 5/09/18
DRAWN: DNB
CHECKED: CK
PROJECT: 171121
DRAWING TITLE: WATER TANK SECTIONS AND DETAILS
REVISIONS:
SHEET NO:
S4.1

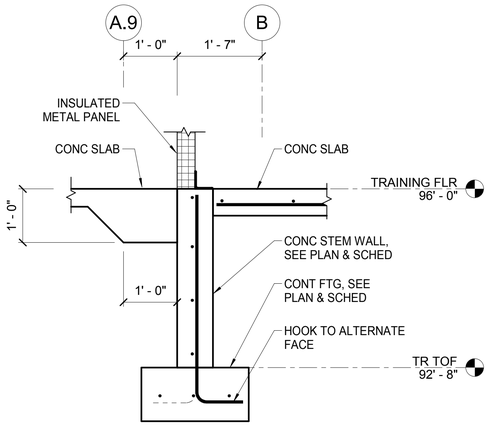

1 FOUNDATION SECTION
3/4" = 1'-0"

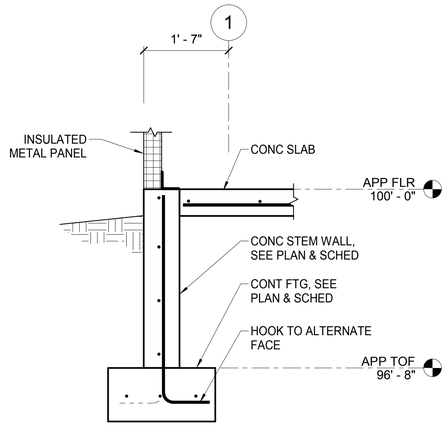

2 FOUNDATION SECTION
3/4" = 1'-0"

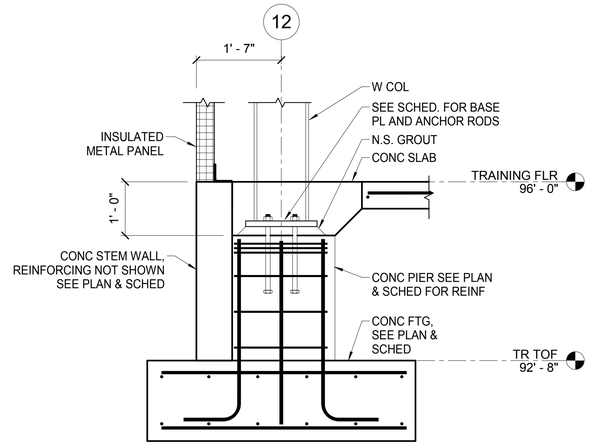

3 FOUNDATION SECTION
3/4" = 1'-0"

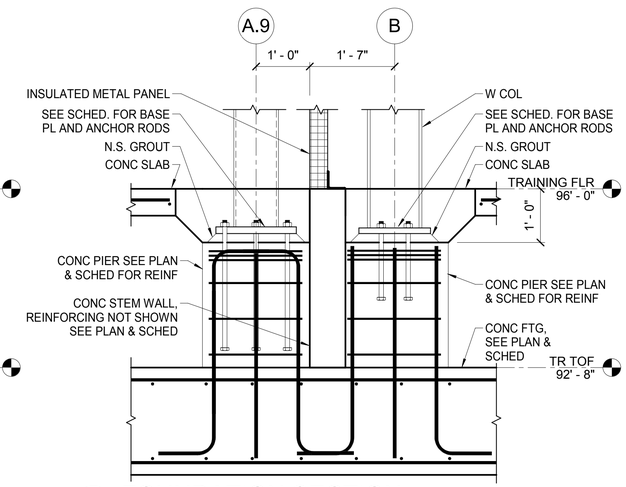

4 FOUNDATION SECTION
3/4" = 1'-0"

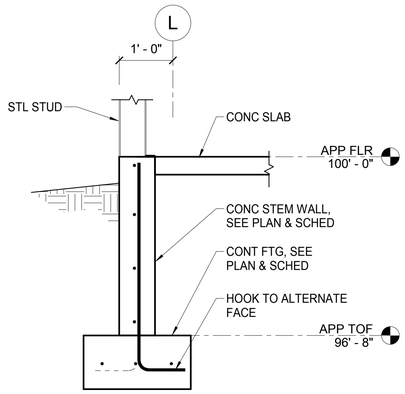

5 FOUNDATION SECTION
3/4" = 1'-0"

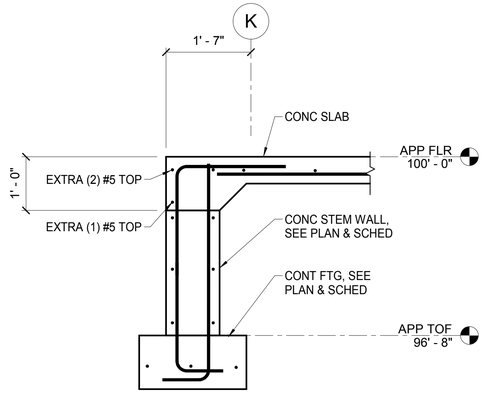

6 FOUNDATION SECTION
3/4" = 1'-0"

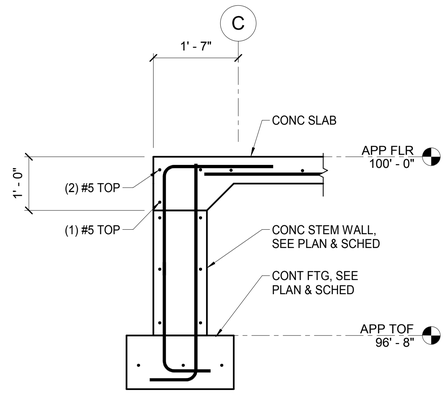

7 FOUNDATION SECTION
3/4" = 1'-0"

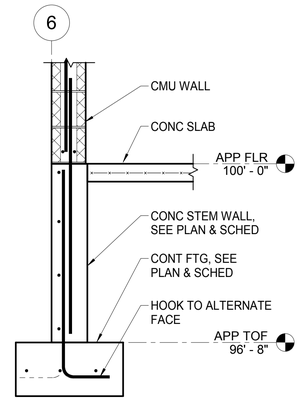

8 FOUNDATION SECTION
3/4" = 1'-0"

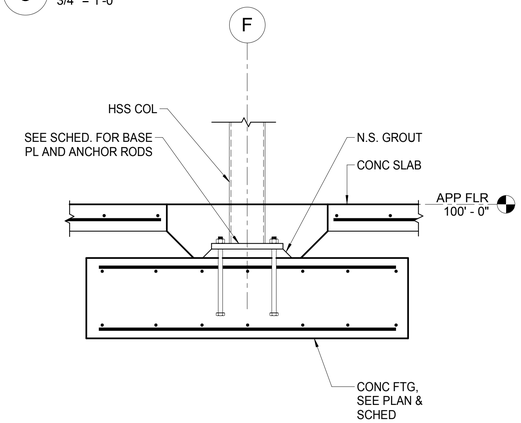

9 FOUNDATION SECTION
3/4" = 1'-0"

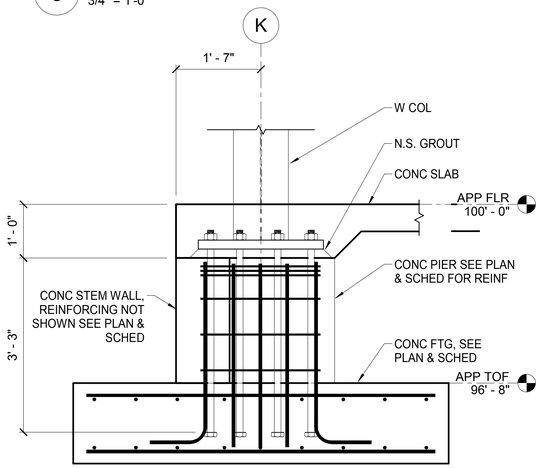

10 FOUNDATION SECTION
3/4" = 1'-0"

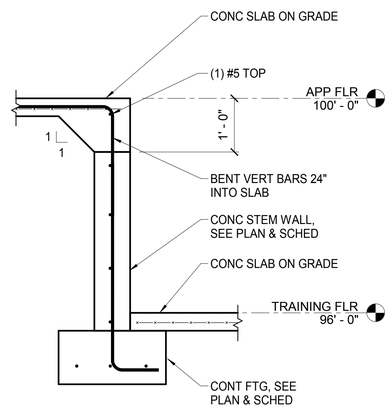

11 FOUNDATION SECTION
3/4" = 1'-0"

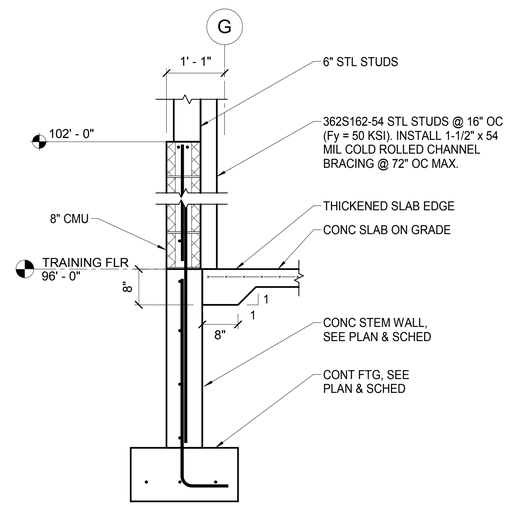

12 FOUNDATION SECTION
3/4" = 1'-0"

STATE OF ALASKA
49TH
F. Charles Kelley
SE-1447
5-09-18
REGISTERED PROFESSIONAL ENGINEER

Burkhart Croft ARCHITECTS LLC
880 N Street Suite 302 | Anchorage Alaska 99501
T: 907.929.9334 | www.burkhart-croft.com

P N D ENGINEERS, INC.
1506 WEST 36th AVENUE
ANCHORAGE, AK, 99503
PH 907.561.1011
WWW.PNDENGINEERS.COM

MATANUSKA-SUSITNA BOROUGH

MSB FIRE STATION 6-2

WASILLA, ALASKA

DATE:	5/09/18
DRAWN:	DNB
CHECKED:	CK
PROJECT:	171121
DRAWING TITLE:	FOUNDATION DETAILS
REVISIONS:	
SHEET NO:	S4.2

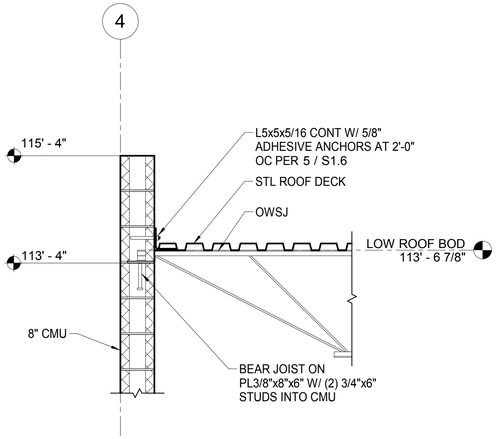

1 LOW ROOF SECTION
3/4" = 1'-0"

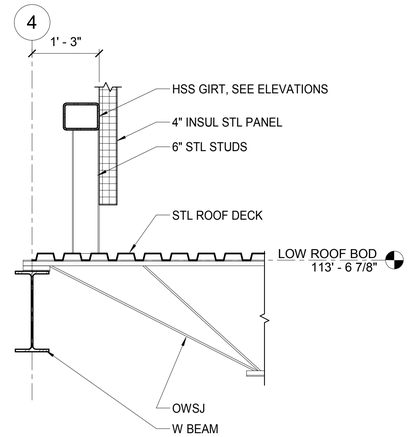

2 LOW ROOF SECTION
3/4" = 1'-0"

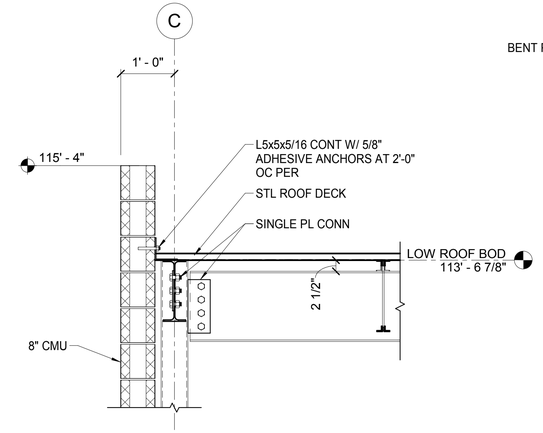

3 LOW ROOF SECTION
3/4" = 1'-0"

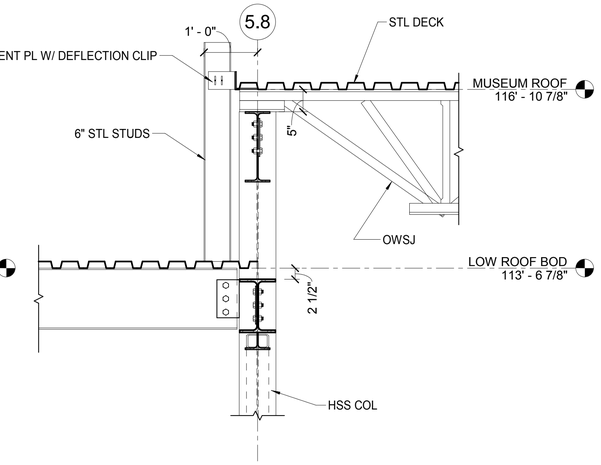

4 LOW ROOF SECTION
3/4" = 1'-0"

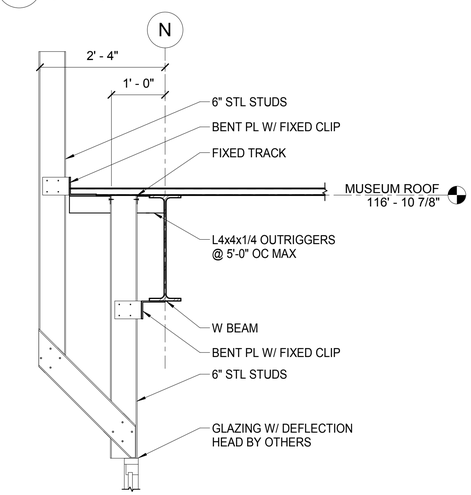

5 LOW ROOF SECTION
3/4" = 1'-0"

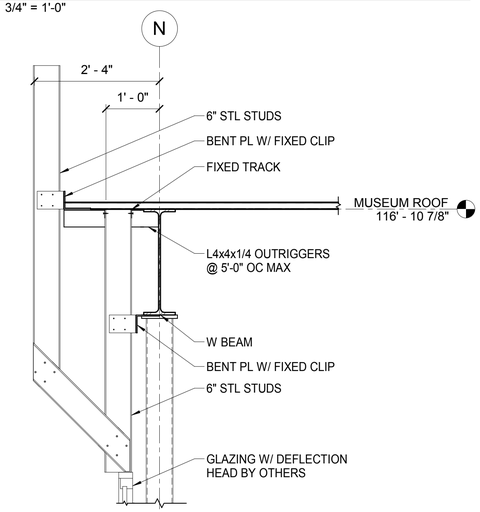

6 LOW ROOF SECTION
3/4" = 1'-0"

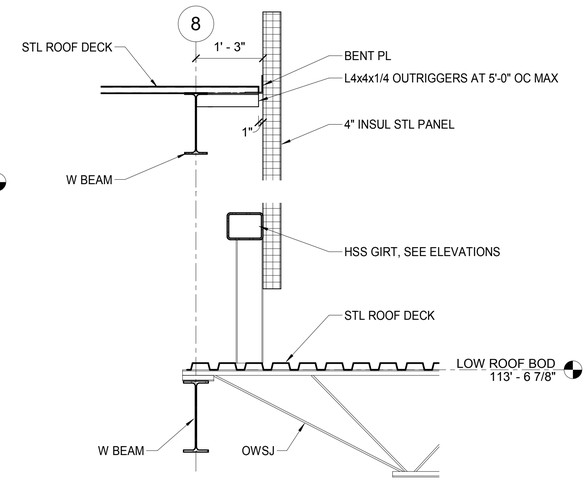

7 LOW ROOF SECTION
3/4" = 1'-0"

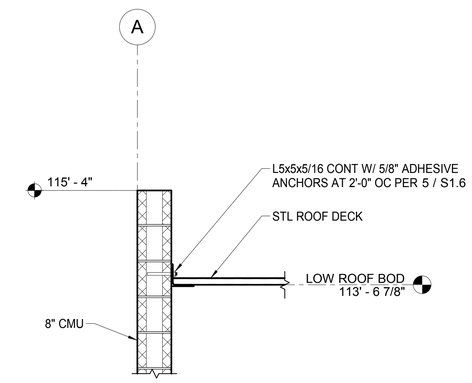

8 LOW ROOF SECTION
3/4" = 1'-0"

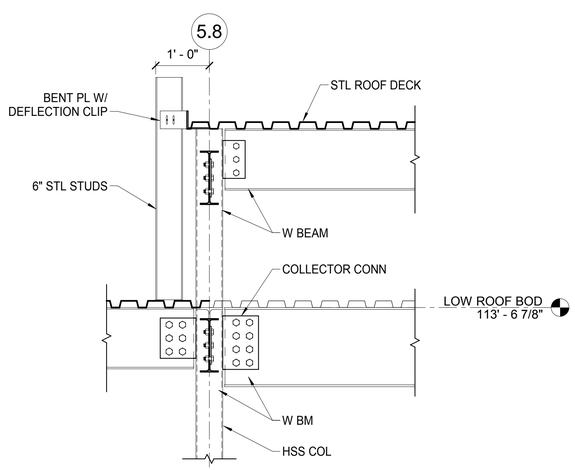

9 LOW ROOF SECTION
3/4" = 1'-0"

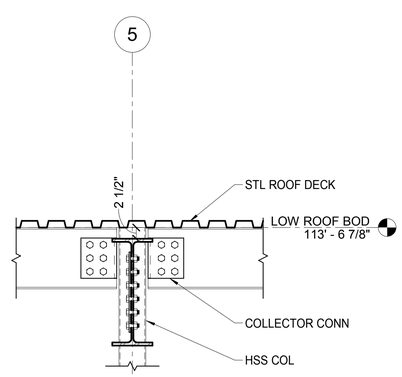

10 LOW ROOF SECTION
3/4" = 1'-0"

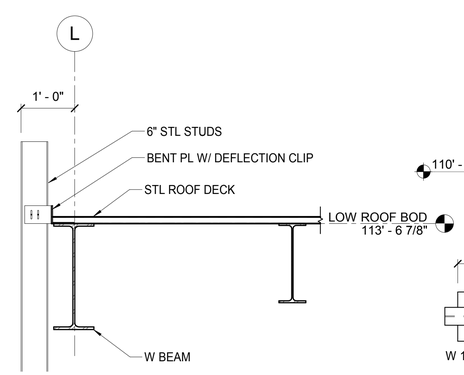

11 LOW ROOF SECTION
3/4" = 1'-0"

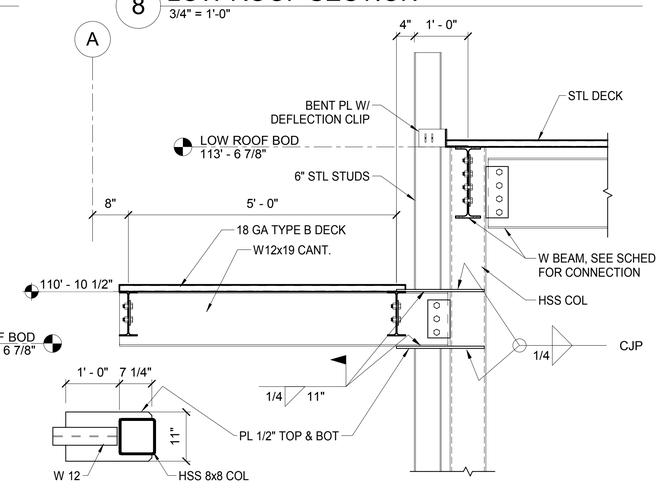

12 LOW ROOF SECTION
3/4" = 1'-0"

STATE OF ALASKA
49 TH
F. Charles Kenley
SE-1447
5.09.18
REGISTERED PROFESSIONAL ENGINEER

Burkhart Croft
ARCHITECTS LLC
880 N Street Suite 302 | Anchorage Alaska 99501
T: 907.929.9334 | www.burkhart-croft.com

P N D
ENGINEERS, INC.
1506 WEST 36th AVENUE
ANCHORAGE, AK, 99503
PH 907.561.1011
WWW.PNDENGINEERS.COM

MATANUSKA-SUSITNA BOROUGH

MSB FIRE STATION 6-2

WASILLA, ALASKA

DATE:	5/09/18
DRAWN:	DNB
CHECKED:	CK
PROJECT:	171121
DRAWING TITLE:	LOW ROOF SECTIONS
REVISIONS:	
SHEET NO:	**S5.1**

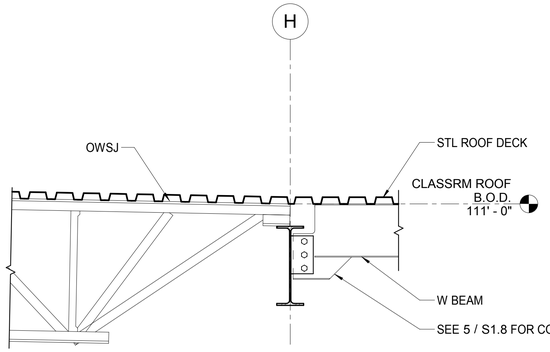

1 DETAIL
3/4" = 1'-0"

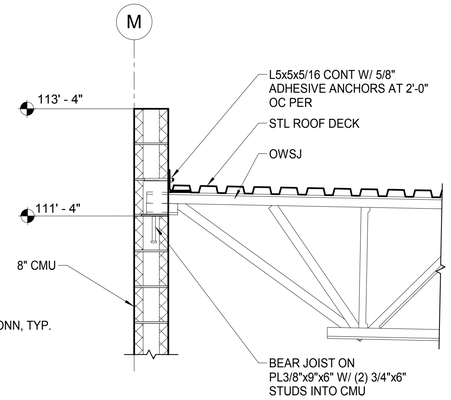

2 DETAIL
3/4" = 1'-0"

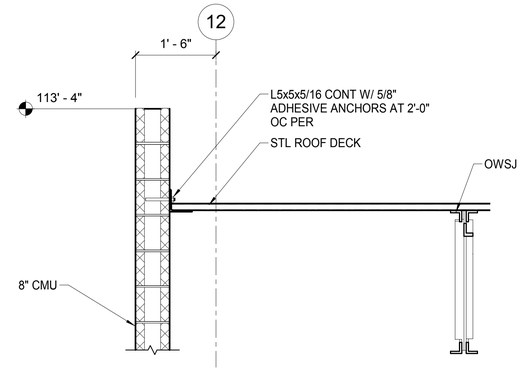

3 DETAIL
3/4" = 1'-0"

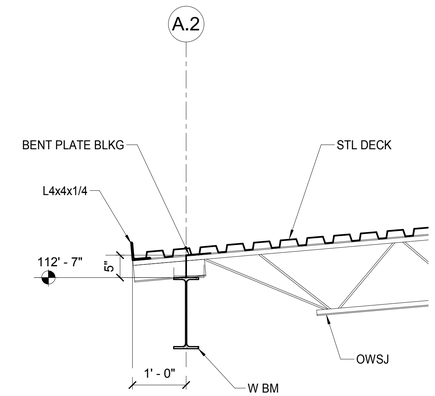

4 DETAIL
3/4" = 1'-0"

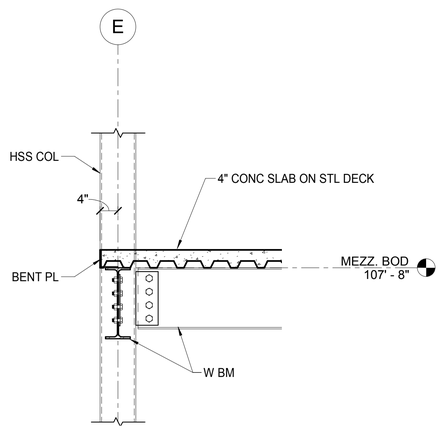

5 DETAIL
3/4" = 1'-0"

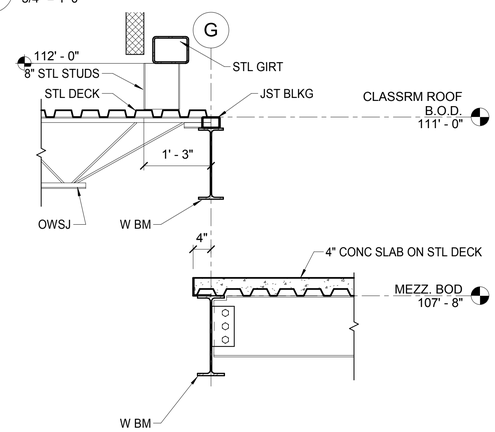

6 DETAIL
3/4" = 1'-0"

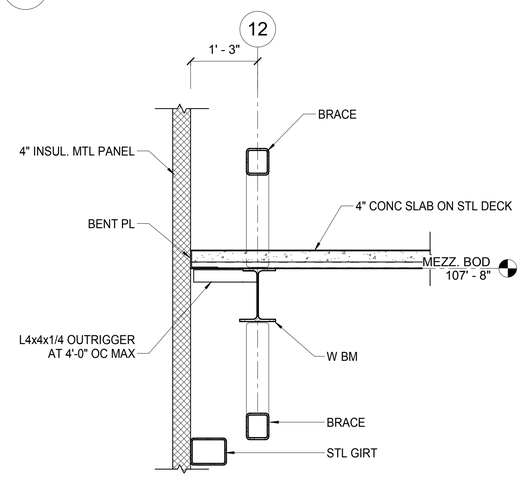

7 DETAIL
3/4" = 1'-0"

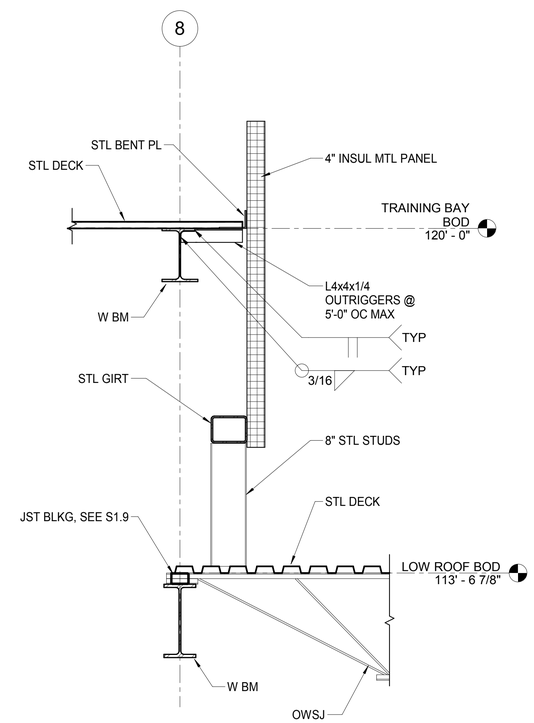

12 DETAIL
3/4" = 1'-0"

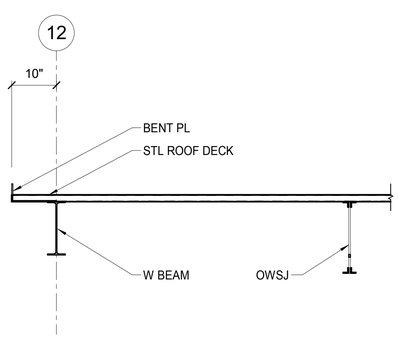

8 SECTION
3/4" = 1'-0"

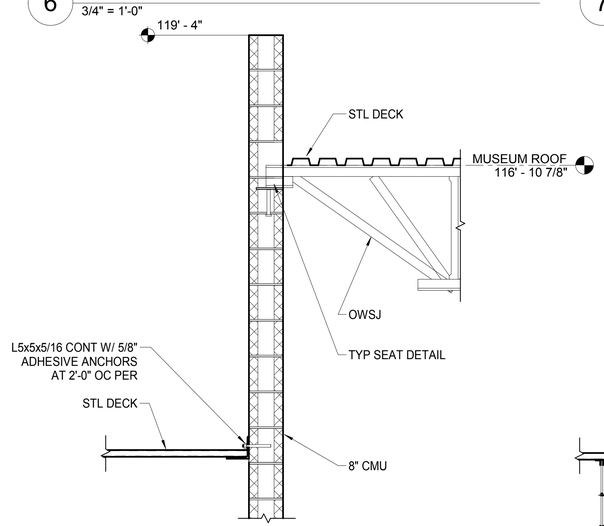

10 DETAIL
3/4" = 1'-0"

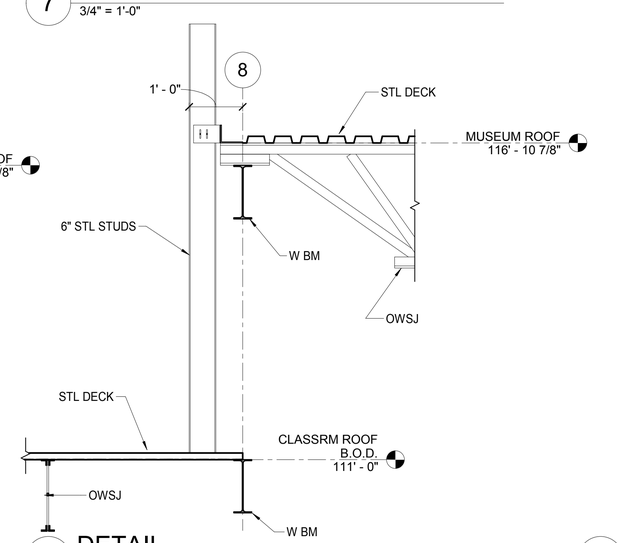

11 DETAIL
3/4" = 1'-0"

STATE OF ALASKA
49 TH
F. Charles Kenley
SE-1447
5.09.18
REGISTERED PROFESSIONAL ENGINEER

Burkhart Croft
ARCHITECTS LLC
880 N Street Suite 302 | Anchorage Alaska 99501
T: 907.929.9334 | www.burkhart-croft.com

P N D
ENGINEERS, INC.
1506 WEST 36th AVENUE
ANCHORAGE, AK, 99503
PH 907.561.1011
WWW.PNDENGINEERS.COM

MATANUSKA-SUSITNA BOROUGH

MSB FIRE STATION 6-2

WASILLA, ALASKA

DATE: 5/09/18
DRAWN: DNB
CHECKED: CK
PROJECT: 171121
DRAWING TITLE:
LOW ROOF AND MEZZANINE SECTIONS
REVISIONS:
SHEET NO:
S5.2

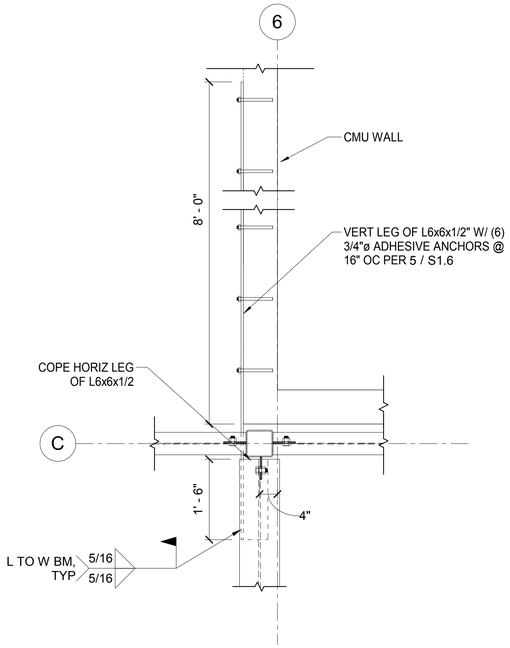

1 DETAIL PLAN VIEW
3/4" = 1'-0"

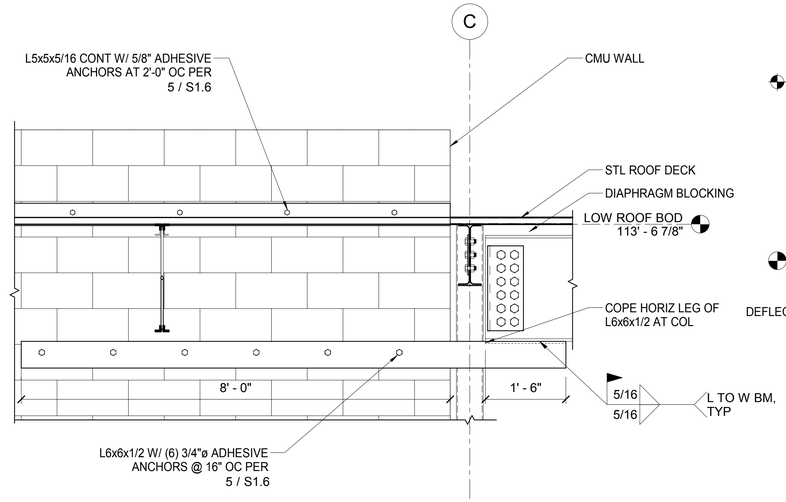

2 DETAIL
3/4" = 1'-0"

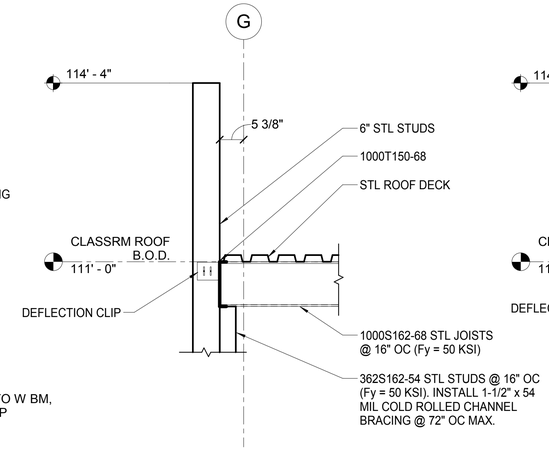

3 SECTION
3/4" = 1'-0"

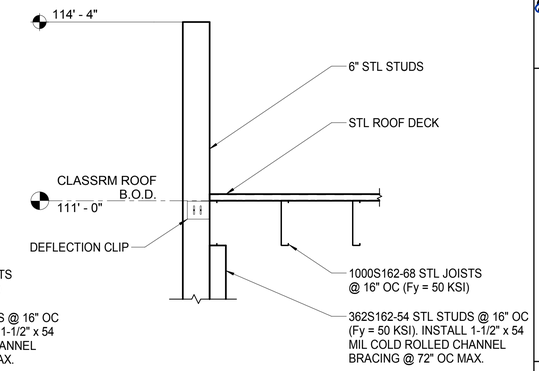

4 SECTION
3/4" = 1'-0"

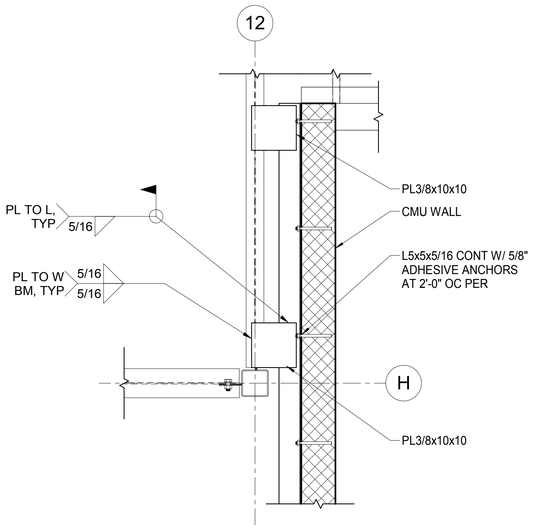

5 DETAIL PLAN VIEW
3/4" = 1'-0"

STATE OF ALASKA
49 TH
F. Charles Kenley
SE-1447
5.09.18
REGISTERED PROFESSIONAL ENGINEER

Burkhart Croft ARCHITECTS LLC
880 N Street Suite 302 | Anchorage Alaska 99501
T: 907.929.9334 | www.burkhart-croft.com

PND ENGINEERS, INC.
1506 WEST 36th AVENUE
ANCHORAGE, AK, 99503
PH 907.561.1011
WWW.PNDENGINEERS.COM

MATANUSKA-SUSITNA BOROUGH

MSB FIRE STATION 6-2

WASILLA, ALASKA

DATE: 5/09/18
DRAWN: DNB
CHECKED: CK
PROJECT: 171121
DRAWING TITLE:
LOW ROOF SECTIONS

REVISIONS:

SHEET NO:
S5.3

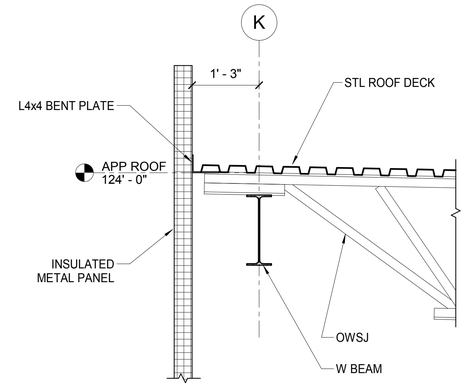

1 DETAIL
3/4" = 1'-0"

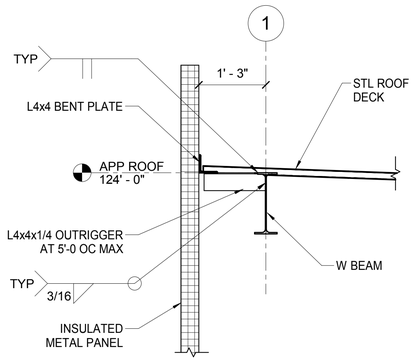

2 DETAIL
3/4" = 1'-0"

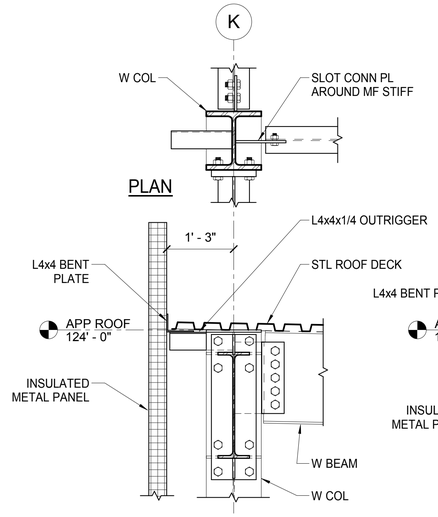

3 DETAIL
3/4" = 1'-0"

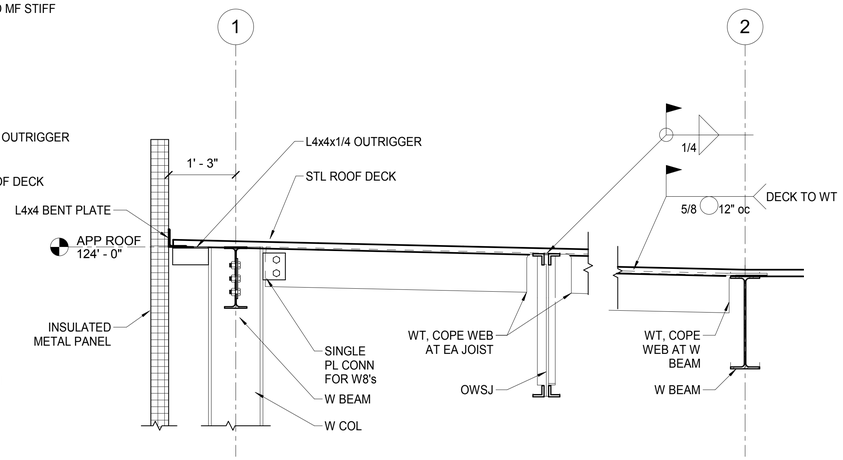

4 DETAIL
3/4" = 1'-0"

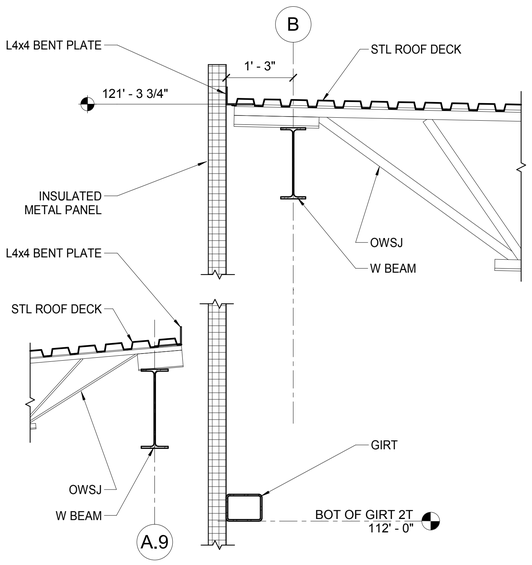

5 DETAIL
3/4" = 1'-0"

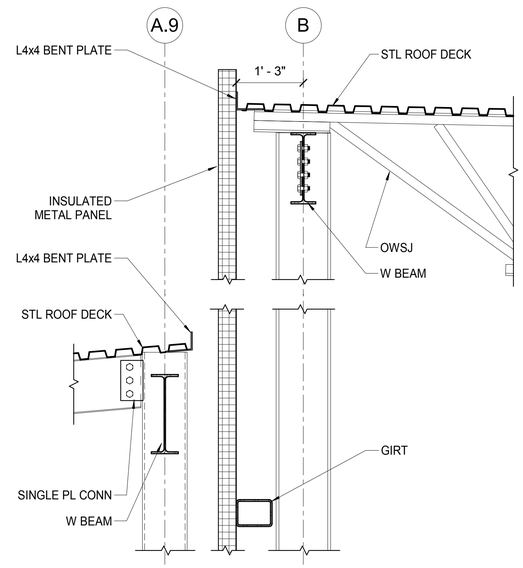

6 DETAIL
3/4" = 1'-0"

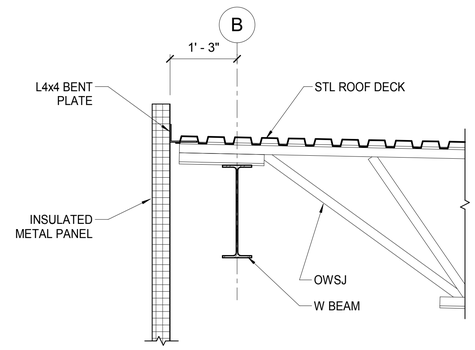

7 DETAIL
3/4" = 1'-0"

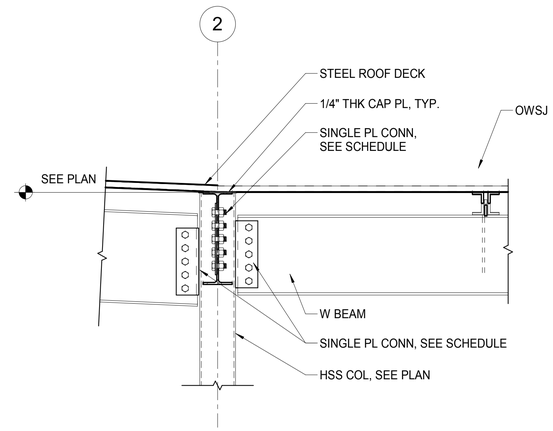

8 DETAIL
3/4" = 1'-0"

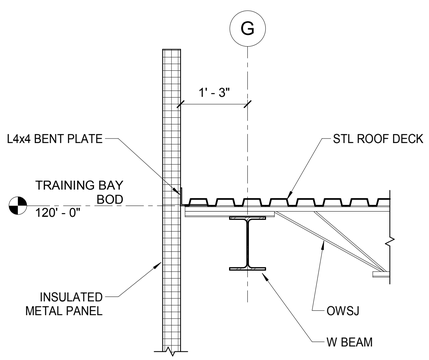

9 DETAIL
3/4" = 1'-0"

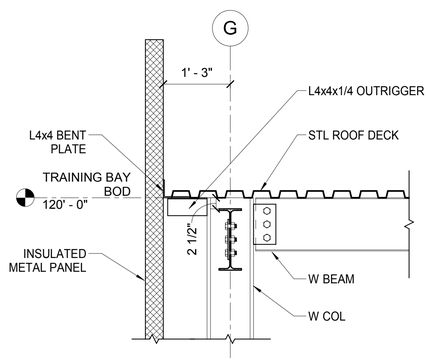

10 DETAIL
3/4" = 1'-0"

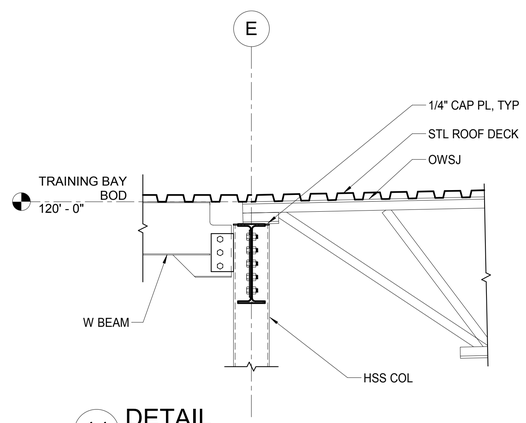

11 DETAIL
3/4" = 1'-0"

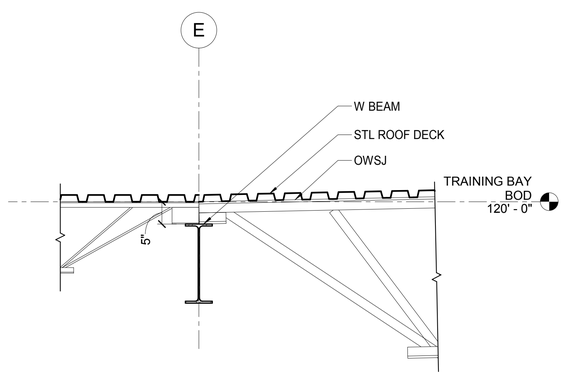

12 DETAIL
3/4" = 1'-0"

STATE OF ALASKA
49 TH
F. Charles Kenley
SE-1447
5.09.18
REGISTERED PROFESSIONAL ENGINEER

Burkhart Croft
ARCHITECTS LLC
880 N Street Suite 302 | Anchorage Alaska 99501
T: 907.929.9334 | www.burkhart-croft.com

PND
ENGINEERS, INC.
1506 WEST 36th AVENUE
ANCHORAGE, AK, 99503
PH 907.561.1011
WWW.PNDENGINEERS.COM

MATANUSKA-SUSITNA BOROUGH

MSB FIRE STATION 6-2

WASILLA, ALASKA

DATE:	5/09/18
DRAWN:	DNB
CHECKED:	CK
PROJECT:	171121
DRAWING TITLE:	HIGH ROOF FRAMING DETAILS
REVISIONS:	
SHEET NO:	S6.1

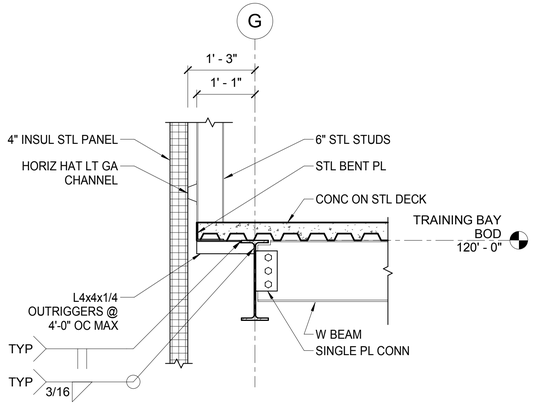

1 DETAIL
3/4" = 1'-0"

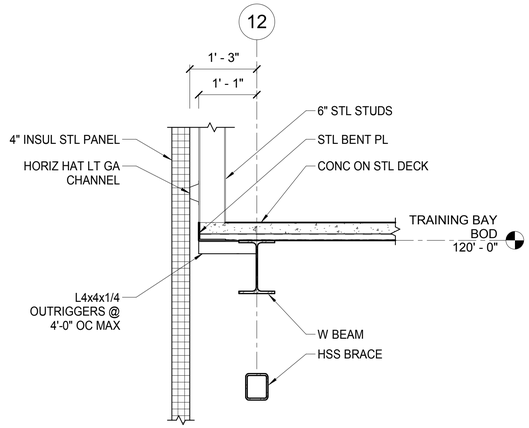

2 DETAIL
3/4" = 1'-0"

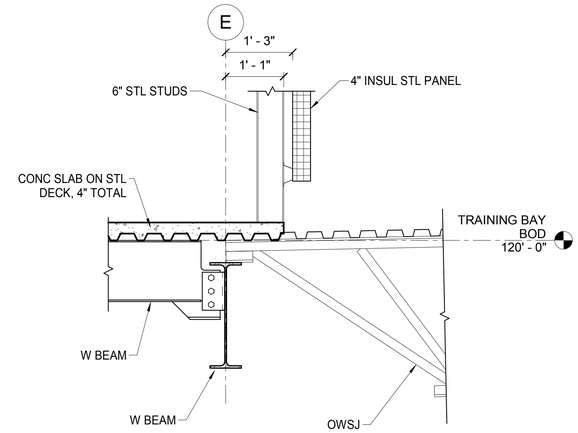

3 DETAIL
3/4" = 1'-0"

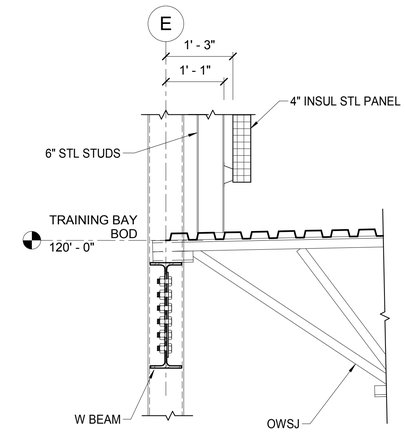

4 DETAIL
3/4" = 1'-0"

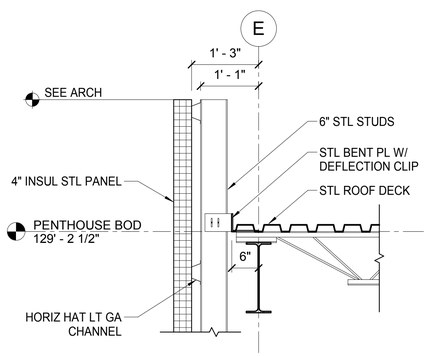

5 DETAIL
3/4" = 1'-0"

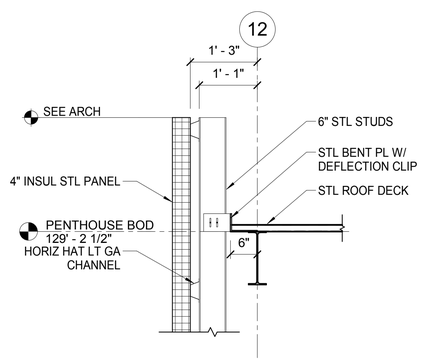

6 DETAIL
3/4" = 1'-0"

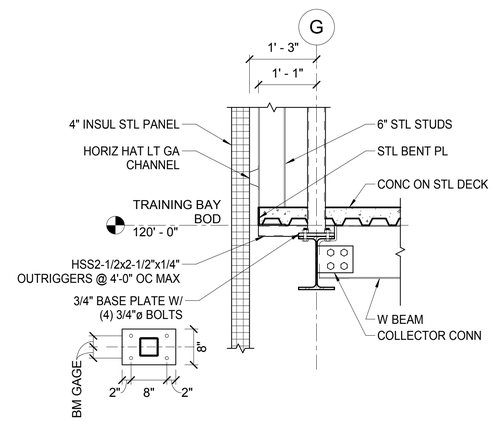

7 DETAIL
3/4" = 1'-0"

STATE OF ALASKA
49 TH
F. Charles Kenley
SE-1447
5.09.18
REGISTERED PROFESSIONAL ENGINEER

Burkhart Croft
ARCHITECTS LLC
880 N Street Suite 302 | Anchorage Alaska 99501
T: 907.929.9334 | www.burkhart-croft.com

P N D
ENGINEERS, INC.
1506 WEST 36th AVENUE
ANCHORAGE, AK, 99503
PH 907.561.1011
WWW.PNDENGINEERS.COM

MATANUSKA-SUSITNA BOROUGH

MSB FIRE STATION 6-2

WASILLA, ALASKA

DATE: 5/09/18

DRAWN: DNB

CHECKED: CK

PROJECT: 171121

DRAWING TITLE:
HIGH ROOF FRAMING DETAILS

REVISIONS:

SHEET NO:

S6.2

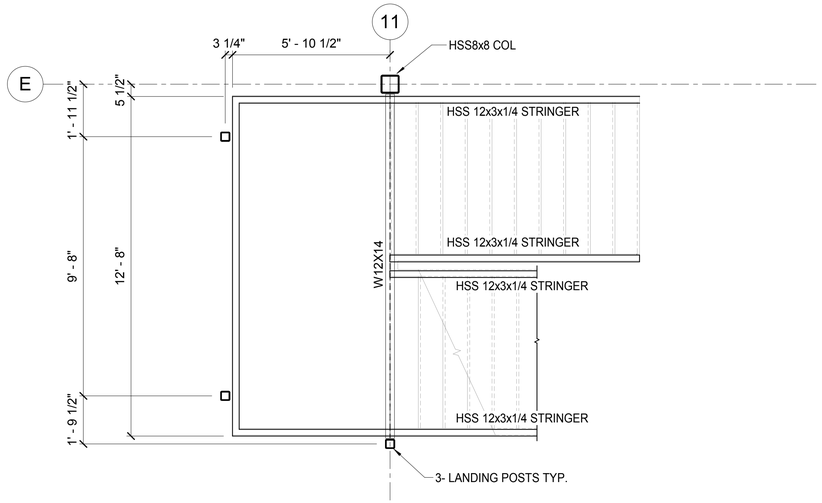

A STAIR 1 - LOWER LANDING PLAN
3/8" = 1'-0"

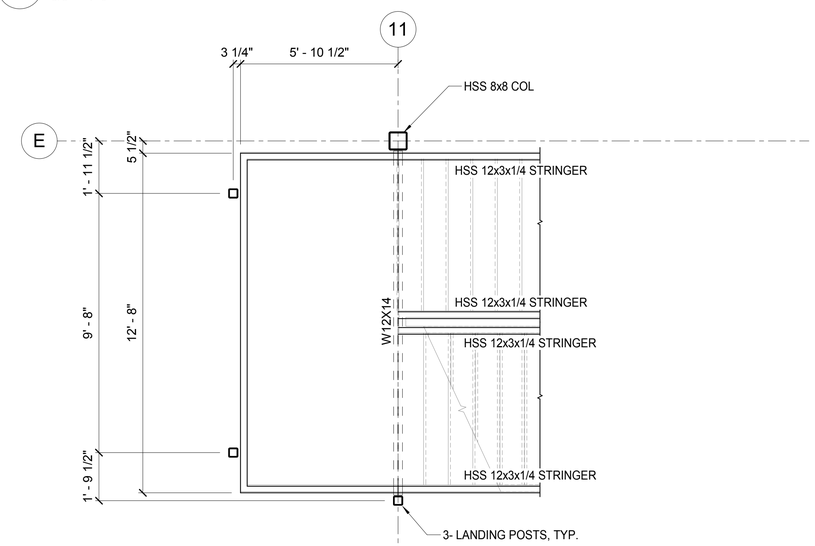

B STAIR 1- UPPER LANDING PLAN
3/8" = 1'-0"

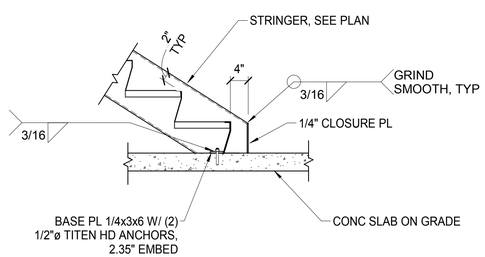

7 DETAIL
3/4" = 1'-0"

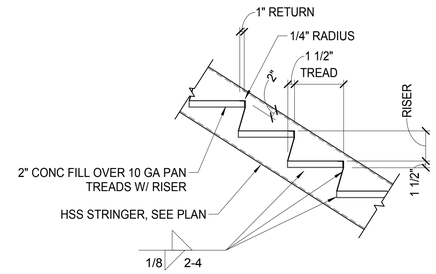

1 DETAIL
3/4" = 1'-0"

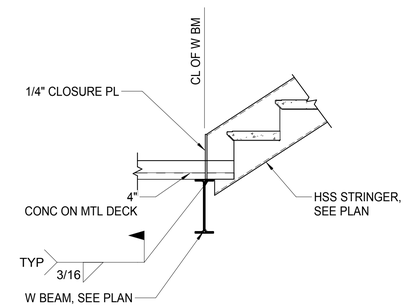

3 UPPER STRINGER CONN. AT FLOORS
3/4" = 1'-0"

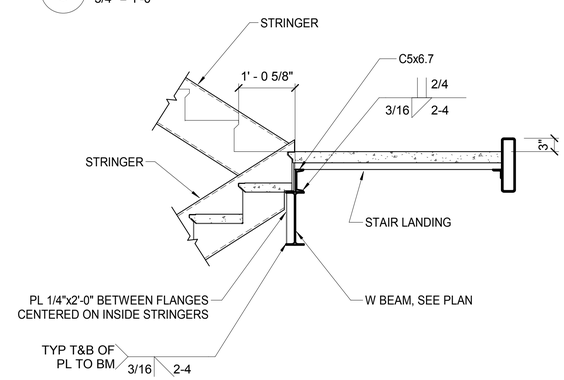

5 TYP. INSIDE STRINGERS AT LANDING
3/4" = 1'-0"

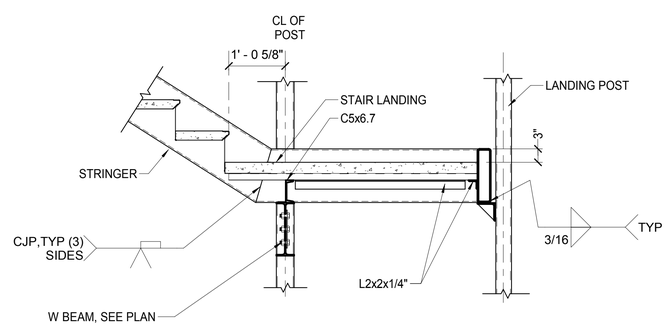

8 TYP. OUTSIDE STRINGER UP
3/4" = 1'-0"

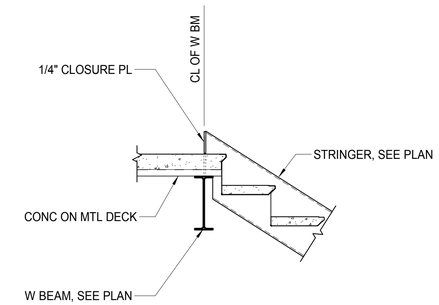

2 LOWER STRINGER CONN. AT FLOORS
3/4" = 1'-0"

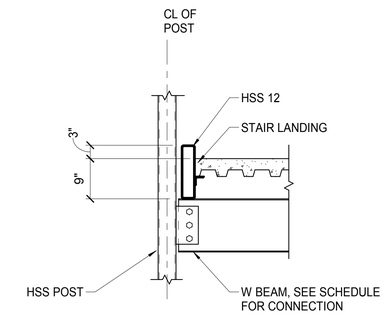

4 LANDING POST TO LANDING BM
3/4" = 1'-0"

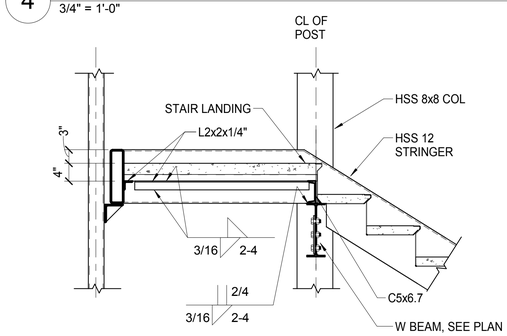

6 TYP. OUTSIDE STRINGER DOWN
3/4" = 1'-0"

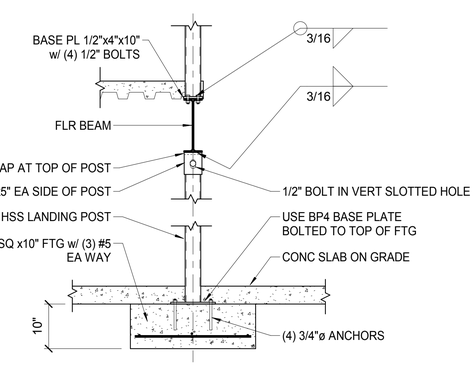

9 LANDING POST CONNECTIONS
3/4" = 1'-0"

STATE OF ALASKA
49 TH
F. Charles Kenley
SE-1447
5.09.18
REGISTERED PROFESSIONAL ENGINEER

Burkhart Croft
ARCHITECTS LLC
880 N Street Suite 302 | Anchorage Alaska 99501
T: 907.929.9334 | www.burkhart-croft.com

PND
ENGINEERS, INC.
1506 WEST 36th AVENUE
ANCHORAGE, AK, 99503
PH 907.561.1011
WWW.PNDENGINEERS.COM

MATANUSKA-SUSITNA BOROUGH

MSB FIRE STATION 6-2

WASILLA, ALASKA

DATE:	5/09/18
DRAWN:	DNB
CHECKED:	CK
PROJECT:	171121
DRAWING TITLE:	STAIR FRAMING PLANS & DETAILS
REVISIONS:	
SHEET NO:	**S7.1**

MECHANICAL LEGEND

- WASTE
- VENT PIPING
- COLD WATER
- HOT WATER
- HOT WATER RECIRCULATED
- XXX — SEE ABBREVIATIONS FOR MEDIA
- PIPE UP
- PIPE DOWN
- TEE UP
- TEE DOWN
- CAP
- UNION
- DIRECTION OF FLOW
- ISOLATION VALVE
- 2-WAY CONTROL VALVE
- 3-WAY CONTROL VALVE
- CHECK VALVE
- BALANCE/SHUT-OFF VALVE
- PRESSURE REDUCING VALVE
- FLEXIBLE PIPING CONNECTOR
- PRESSURE/TEMPERATURE RELIEF VALVE
- HOSE BIBB
- PUMP
- CLEANOUT
- PIPE GUIDE
- PIPE ANCHOR
- THERMOMETER
- PRESSURE GAUGE WITH ISOLATION COCK
- STRAINER WITH BLOWDOWN
- WATER HAMMER ARRESTOR
- X — LETTER INDICATES PDI SIZE
- FLOOR CLEANOUT
- FLOOR DRAIN
- SUPPLY AIR UP & DOWN (SQUARE)
- SUPPLY AIR DIFFUSER / GRILLE
- RETURN AIR UP & DOWN (SQUARE)
- RETURN AIR GRILLE
- EXHAUST AIR UP & DOWN (SQUARE)
- EXHAUST AIR GRILLE
- ROUND DUCT UP & DOWN
- VOLUME DAMPER
- MOTORIZED CONTROL DAMPER
- SOUND LINED DUCTWORK
- 24/12 — DUCT SIZE (FIRST NUMBER - SIDE SHOWN) (SECOND NUMBER - SIDE NOT SHOWN)
- INSULATED DUCTWORK
- TURNING VANES
- FLEXIBLE DUCT CONNECTION
- DIFFUSER WITH FLEXIBLE DUCT
- 1 — THERMOSTAT OR SENSOR
- 1 — THERMOSTAT OR SENSOR WITH LOCKING COVER
- SP — STATIC PRESSURE SENSOR
- 1 — SHEET NOTES
- SX:CFM — SERVICE: S-SUPPLY, R-RETURN, E-EXHAUST; CFM; DIFFUSER OR GRILLE TAG
- 1 / M1 — DETAIL NUMBER; SHEET LOCATED ON
- BB-1 / 1.0 | 12 — BASEBOARD DESIGNATION; ACTIVE LENGTH; GPM

INTERCEPTOR SCHEDULE

SYMBOL	FIXTURE	CONNECTIONS WASTE	CONNECTIONS VENT	FLOW (GPM)	OIL HOLDING CAPACITY (GALLONS)	MFGR.	MODEL	DIMENSIONS (TANKS SAME SIZE)	TRIM / REMARKS
OWS-1	OIL SEPARATOR	4"	(2)3"	50	86.1	STRIEM	OS-50/OCT-50	37"Lx28"Wx28.5"D	SEAMLESS MOLDED POLYETHYLENE TANK, HIGHWAY RATED COMPOSITE COVER, COALESCING MEDIA, AUDIO/VISUAL ALARM PANEL, RISER AS REQUIRED, OCT-50 COLLECTION TANK
OWS-2	OIL SEPARATOR	4"	(2)3"	50	86.1	STRIEM	OS-50/OCT-50	37"Lx28"Wx28.5"D	SEAMLESS MOLDED POLYETHYLENE TANK, HIGHWAY RATED COMPOSITE COVER, COALESCING MEDIA, AUDIO/VISUAL ALARM PANEL, RISER AS REQUIRED, OCT-50 COLLECTION TANK

PLUMBING FIXTURE SCHEDULE

SYMBOL	FIXTURE	MINIMUM CONNECTION SIZE CW	HW	WASTE	VENT	TRAP	MANUFACTURER	MODEL	COLOR	TRIM / REMARKS
WC-1	WATER CLOSET - FLOOR MOUNT - ADA	1/2"	---	3"	2"	---	KOHLER	HIGHLINE K-3493	WHITE	ELONGATED BOWL, SPLIT RIM SEAT, SLOAN FLUSHMATE PRESSURE ASSIST, TANK COVER LOCKS, ADA COMPLIANT BOWL HEIGHT,
										LEFT OR RIGHT HAND TRIP LEVER AS REQUIRED FOR ADA COMPLIANCE
WC-2	WATER CLOSET - FLOOR MOUNT	1/2"	---	3"	2"	---	KOHLER	HIGHLINE K-3493	WHITE	ELONGATED BOWL, SPLIT RIM SEAT, SLOAN FLUSHMATE PRESSURE ASSIST, TANK COVER LOCKS, COMFORT HEIGHT
UR-1/2	URINAL - WALL MOUNT - ADA/NON-ADA	3/4"	---	2"	1-1/2"	---	KOHLER	BARDON K-4904-ET	WHITE	1.0 GALLON PER FLUSH, SLOAN ROYAL 186-1.0 FLUSH VALVE, WALL CARRIER, ADA HEIGHT FOR UR-1 ONLY
LV-1	LAVATORY - COUNTER MOUNT	1/2"	1/2"	1-1/2"	1-1/4"	1-1/4"	KOHLER	PENNINGTON K-2196	WHITE	SLOAN BATTERY POWER EBF-85, PROVIDE METAL GRID STRAINER, ASSE 1070 THERMOSTATIC MIX VALVE FOR HOT WATER SUPPLY IF
										INSTALLED TV-1 IS NOT CSA B125.3 APPROVED, ADA PROTECTIVE COVERS FOR WASTE/HOT/COLD PIPING AND ANGLE STOPS
LV-2	LAVATORY - COUNTER MOUNT	1/2"	1/2"	1-1/2"	1-1/4"	1-1/4"	KOHLER	PENNINGTON K-2196	WHITE	DELTA FAUCET 515LF-HDF WITH POP-UP STRAINER, ADA PROTECTIVE COVERS FOR WASTE/HOT/COLD PIPING AND ANGLE STOPS
LV-3	LAVATORY - WALL MOUNT - ADA	1/2"	1/2"	1-1/2"	1-1/4"	1-1/4"	KOHLER	KINGSTON K-2005	WHITE	DELTA FAUCET 515LF-HDF WITH POP-UP STRAINER, ADA PROTECTIVE COVERS FOR WASTE/HOT/COLD PIPING AND ANGLE STOPS,
										CONCEALED ARM SUPPORTS, WALL CARRIER FOR ADA HEIGHT
SK-1	KITCHEN SINK	1/2"	1/2"	2"	1-1/2"	1-1/2"	JUST	DL-2133-A-GR	STAINLESS	DELTA FAUCET 400LF-HDF WITH HOSE SPRAY, PROVIDE METAL GRID STRAINERS, 120V/1Ph/0.5HP INSINKERATOR BADGER 5
										GARBAGE DISPOSAL, PROVIDE AIR GAP FOR DISHWASHER CONNECTION, ISLAND VENT SINK PER 2012 UPC SECTION 909.0
SK-2	SNACK BAR SINK - ADA	1/2"	1/2"	2"	1-1/2"	1-1/2"	JUST	SL-ADA-17519-A-GR	STAINLESS	ADA DELTA FAUCET 2171LF-WBHHDF, PROVIDE METAL GRID STRAINER, PROVIDE 6-1/2" BOWL DEPTH FOR ADA COMPLIANCE
SK-3	COFFEE BAR SINK	1/2"	1/2"	2"	1-1/2"	1-1/2"	JUST	SL-17519-A-GR	STAINLESS	DELTA FAUCET 101LF-HDF, PROVIDE METAL GRID STRAINER, 115V/1Ph/750W INSINKERATOR H-VIEW-SS INSTA-HOT
SK-4	BAY SINK	1/2"	1/2"	2"	1-1/2"	1-1/2"	JUST	DL-2133-A-GR	STAINLESS	DELTA FAUCET 101LF-HDF, PROVIDE METAL GRID STRAINERS
SK-5	DECON SINK	1/2"	1/2"	3"	2"	3"	JUST	NSFB-345-24RL	STAINLESS	14 GAUGE TYPE 304 STAINLESS STEEL, 12" BACKSPLASH, LEFT/RIGHT DRAINBOARDS, STEEL TUBE LEGS, ADJUSTABLE BULLET FEET,
										3 COMPARTMENT SINK, 2 EACH DELTA FAUCET 55C1583 WITH SWING SPOUT, CENTER FAUCETS BETWEEN TWO SINK COMPARTMENTS,
										PROVIDE WITH ONE EACH WALL MOUNTED HAWS 7610 EMERGENCY EYE/FACE WASH WITH THERMOSTATIC MIXING VALVE
SK-6	JANITOR SINK	1/2"	1/2"	3"	2"	3"	FIAT	MSB 2424	WHITE	SERVICE FAUCET 830-AA, HOSE AND HOSE BRACKET 832-AA, VINYL BUMPERGUARD E-77-AA, MOP HANGER 889-CC
SH-1	SHOWER - ADA	1/2"	1/2"	2"	1-1/2"	2"	MAAX	OPS-4248-RS	WHITE	DELTA T13H152 WITH R10000-UNWS VALVE BODY, 70" FLEX HOSE, METAL LEVER, ADJUSTABLE MAXIMUM TEMPERATURE, INTEGRAL
										CHECK STOPS, PRESSURE BALANCED, 24" STAINLESS STEEL SLIDE BAR, ONE PIECE FIBERGLASS UNIT, ONE HORIZONTAL L-SHAPED
										TEXTURED STAINLESS STEEL GRAB BAR, FOLD UP SEAT, RECESSED SOAP DISH, CHROME CURTAIN ROD WITH VINYL SHOWER CURTAIN,
										BRASS DRAIN WITH CHROME PLATED STAINLESS STEEL GRID, INSTALL PER ADA REQUIREMENTS
SH-2	SHOWER	1/2"	1/2"	2"	1-1/2"	2"	MAAX	OPS-4248	WHITE	DELTA T13H152 WITH R10000-UNWS VALVE BODY, 70" FLEX HOSE, METAL LEVER, ADJUSTABLE MAXIMUM TEMPERATURE, INTEGRAL
										CHECK STOPS, PRESSURE BALANCED, 24" STAINLESS STEEL SLIDE BAR, ONE PIECE FIBERGLASS UNIT, RECESSED SOAP DISH,
										CHROME CURTAIN ROD WITH VINYL SHOWER CURTAIN, BRASS DRAIN WITH CHROME PLATED STAINLESS STEEL GRID
SH-3	SHOWER	1/2"	1/2"	2"	1-1/2"	2"	MAAX	OPS-6036	WHITE	DELTA T13H152 WITH R10000-UNWS VALVE BODY, 70" FLEX HOSE, METAL LEVER, ADJUSTABLE MAXIMUM TEMPERATURE, INTEGRAL
										CHECK STOPS, PRESSURE BALANCED, 24" STAINLESS STEEL SLIDE BAR, ONE PIECE FIBERGLASS UNIT, RECESSED SOAP DISH,
										CHROME CURTAIN ROD WITH VINYL SHOWER CURTAIN, BRASS DRAIN WITH CHROME PLATED STAINLESS STEEL GRID
SH-4	SHOWER	1/2"	1/2"	2"	1-1/2"	2"	MAAX	ALLIA SH-4834	WHITE	DELTA T13H152 WITH R10000-UNWS VALVE BODY, 70" FLEX HOSE, METAL LEVER, ADJUSTABLE MAXIMUM TEMPERATURE, INTEGRAL
										CHECK STOPS, PRESSURE BALANCED, 24" STAINLESS STEEL SLIDE BAR, ONE PIECE ACRYLIC SHOWER UNIT, CURTAIN ROD,
										3-LEVEL CORNER SHELVES, 3.25" THRESHOLD, CENTER DRAIN
ESH-1	EMERGENCY SHOWER & EYE/FACE WASH	1-1/4"	1-1/4"	---	---	---	GUARDIAN	G1950	---	WITH EYE/FACE WASH, STAINLESS STEEL BOWL, ABS SHOWER HEAD, G3800LF THERMOSTATIC MIXING VALVE, INTEGRAL FLOW CONTROL
DF-1	DRINKING FOUNTAIN/BOTTLE FILLER - ADA	1/2"	---	1-1/2"	1-1/4"	1-1/4"	ELKAY	LZWS-EDFPBM114K	STAINLESS	RECESSED BOTTLE FILLER WITH SENSOR, PUSH BUTTON FOUNTAIN, WALL MOUNTED SINGLE BASIN WITH CARRIER, NON-CHILLED,
										BARRIER FREE/ADA COMPLIANT, LEAD FREE, 3000-GALLON CAPACITY FILTER, PROVIDE 115V/60HZ POWER OUTLET FOR UNIT
DF-2	DRINKING FOUNTAIN - DOUBLE - ADA	1/2"	---	1-1/2"	1-1/4"	1-1/4"	ELKAY	EDFPBM117K	STAINLESS	PUSH BUTTON FOUNTAIN, WALL MOUNTED DOUBLE BASIN WITH CARRIER, NON-CHILLED, BARRIER FREE/ADA COMPLIANT, LEAD FREE
EW-1	EMERGENCY EYEWASH	---	---	---	---	---	HAWS	7500	GREEN	WALL MOUNTED PORTABLE GRAVITY FED EYEWASH, NO PLUMBED CONNECTIONS
WB-1	WASHER BOX	3/4"	3/4"	2"	1-1/2"	2"	OATEY	38979	---	WITH WATER HAMMER ARRESTORS
WB-2	WASHER BOX	3/4"	3/4"	---	---	---	OATEY	38979	---	WITH WATER HAMMER ARRESTORS, LESS DRAIN, CAP DRAIN CONNECTION IN WASHER BOX
RB-1	REFRIGERATOR BOX	1/2"	---	---	---	---	OATEY	38680	---	WITH WATER HAMMER ARRESTOR
RD-1	ROOF DRAIN	---	---	4"	---	---	J.R. SMITH	1010	---	WITH SUMP RECEIVER, EXTENSION IF REQUIRED
OD-1	OVERFLOW ROOF DRAIN	---	---	4"	---	---	J.R. SMITH	1080	---	WITH 2" DAM AND SUMP RECEIVER, EXTENSION IF REQUIRED
RD-2	ROOF DRAIN	---	---	3"	---	---	J.R. SMITH	1010	---	WITH SUMP RECEIVER, EXTENSION IF REQUIRED
OD-2	OVERFLOW ROOF DRAIN	---	---	3"	---	---	J.R. SMITH	1080	---	WITH 2" DAM AND SUMP RECEIVER, EXTENSION IF REQUIRED
FS-1	FLOOR SINK	---	---	3"	2"	3"	J.R. SMITH	3100	---	WITH DOME BOTTOM STRAINER, NB RIM, 3/4" GRATE, P-TRAP TRAP PRIMER CONNECTION, INSTALL FLUSH WITH SLAB
FD-1	FLOOR DRAIN	---	---	2"	1-1/2"	2"	J.R. SMITH	2005-A	---	WITH ROUND TOP AND TRAP PRIMER CONNECTION
FD-2	FLOOR DRAIN	---	---	3"	2"	3"	J.R. SMITH	2005-A	---	WITH ROUND TOP, SEDIMENT BUCKET, TRAP PRIMER CONNECTION
FD-3	FLOOR DRAIN	---	---	4"	3"	4"	J.R. SMITH	2005-A	---	WITH ROUND TOP, SEDIMENT BUCKET, TRAP PRIMER CONNECTION
TD-1	TRENCH DRAIN	---	---	4"	---	---	ZURN	Z886-HD	---	WITH HEAVY-DUTY FRAME ASSEMBLY, HEEL-PROOF DUCTILE IRON SLOTTED GRATE, LOADING CLASS E, Z887-6-HD CATCH BASIN
HB-1	HOSE BIBB - FROST PROOF	3/4"	---	---	---	---	WOODFORD	MODEL 65	---	WITH TEE HANDLE, VACUUM BREAKER
HB-2	HOSE BIBB - FROST PROOF	3/4"	3/4"	---	---	---	WOODFORD	MODEL C22	---	WITH OPERATING HANDLES, IAPMO LISTED, FREEZELESS, TWO CHECK VALVES, 3/4" MALE HOSE THREAD, ASSE 1052 APPROVED
HB-3	HOSE BIBB	3/4"	---	---	---	---	WOODFORD	MODEL 24	---	WITH VACUUM BREAKER AND 3/4" MALE HOSE THREAD

EXPANSION TANK SCHEDULE

SYMBOL	MFGR / MODEL	FUNCTION	FLUID	TOTAL VOLUME (GALLONS)	ACCEPTANCE VOLUME (GALLONS)	DIMENSIONS	MATERIAL	LABEL	REMARKS
ET-1	AMTROL / 800-L	BUILDING HEAT HYDRONIC EXPANSION	WATER	211	211	30"ø x 82"	STEEL/BUTYL	ASME	SET PRE-CHARGE TO 15 PSIG
ET-2	AMTROL / 400-L	SNOWMELT HYDRONIC EXPANSION	50% P.G.	106	106	24"ø x 66"	STEEL/BUTYL	ASME	SET PRE-CHARGE TO 12 PSIG
ET-3	AMTROL / ST-447C	DOMESTIC HOT WATER EXPANSION	WATER	53	53	24"ø x 45"	STEEL/BUTYL	ASME	NSF CERTIFIED BLADDER, SET PRE-CHARGE TO 60 PSIG
WT-1*	AMTROL / WX-405	WELL SERVICE EXPANSION TANK	WATER	90	34	24"ø x 59"	STEEL/BUTYL	NSF	---

*ONCE WELL SYSTEM FLOW RATES ARE VERIFIED AFTER WELL HAS BEEN DRILLED, VERIFY WELL TANK IS APPROPRIATELY SIZED BASED ON ACTUAL FLOW RATE FROM THE WELL PUMP SYSTEM.

HOT WATER GENERATOR SCHEDULE

SYMBOL	MFGR / MODEL	DOMESTIC HOT WATER RECOVERY (GPH)	CAPACITY (GAL)	EWT	LWT	HEATING MEDIUM FLUID	FLOW (GPM)	WPD (FT HD)	EFT	LFT	CERTIFICATION	REMARKS
HWG-1/2	WEIL MCLAIN / AQUA PLUS 85	310	80.6	40°F	140°F	WATER	14	6'	180°F	152°F	AHRI	STAINLESS STEEL TANK, 2" INSULATION, TEMPERATURE AND PRESSURE RELIEF VALVE

AIR COMPRESSOR SCHEDULE

SYMBOL	MFGR / MODEL	SERVICE	TYPE	DIMENSIONS	ELECTRICAL HP	VOLTS/PH	REMARKS
AC-1	ATLAS COPCO / G11-175T AFF	FIRE DEPT.	BELT DRIVE	77"L x 26"W x 58"H	15	460/3	40.0 CFM @ 175 PSIG, 120 GALLON TANK, FIXED SPEED, INTEGRATED AIR DRYER SYSTEM, AFTER COOLER, MOTOR STARTER, AND PUSH BUTTON CONTROLS
AC-2	ATLAS COPCO / G11-175T AFF	TRAINING BAY	BELT DRIVE	77"L x 26"W x 58"H	15	460/3	40.0 CFM @ 175 PSIG, 120 GALLON TANK, FIXED SPEED, INTEGRATED AIR DRYER SYSTEM, AFTER COOLER, MOTOR STARTER, AND PUSH BUTTON CONTROLS

STATE OF ALASKA 49TH Timothy C Hickman ME-14669 05/09/18 REGISTERED PROFESSIONAL ENGINEER

Burkhart Croft ARCHITECTS LLC
880 N Street Suite 302 | Anchorage Alaska 99501
T: 907.929.9334 | www.burkhart-croft.com

HZA ENGINEERING SOLUTIONS
HZA Engineering, LLC
113 W. Northern Lights Blvd., Suite 240
Anchorage, Alaska 99503
Tel. (907) 562-1012 Fax (907) 562-1013
AK Corporation # AECL881

MATANUSKA-SUSITNA BOROUGH

MSB FIRE STATION 6-2

WASILLA, ALASKA

DATE: 5/9/2018

DRAWN: MS

CHECKED: TCH

PROJECT: 2017.064.0

DRAWING TITLE: LEGEND AND SCHEDULES

REVISIONS:

SHEET NO: **M0.1**

ABBREVIATIONS

A	COMPRESSED AIR
AAV	AUTOMATIC AIR VENT
AD	ACCESS DOOR
ADJ	ADJUSTABLE
AFF	ABOVE FINISHED FLOOR
AHU	AIR HANDLING UNIT
ALT	ALTERNATE
AMPS	AMPERES
APD	AIR PRESSURE DROP
ARCH	ARCHITECTURAL
AWT	AVERAGE WATER TEMPERATURE
BDD	BACKDRAFT DAMPER
BHD	BOTTOM HORIZONTAL DISCHARGE
BI	BACKWARD INCLINE
BLDG	BUILDING
BOD	BOTTOM OF DUCT
BTUH	BRITISH THERMAL UNIT PER HOUR
C/A	COMBUSTION AIR
CFM	CUBIC FEET PER MINUTE
CONT	CONTINUED
CO	CLEANOUT
CONN	CONNECTION
CP	CIRCULATION PUMP
CRR	COOLING REFRIGERANT RETURN
CRS	COOLING REFRIGERANT SUPPLY
CUH	CABINET UNIT HEATER
CW	COLD WATER
ø	DIAMETER
dB	DECIBELS
DBD	DOWNBLAST DISCHARGE
DEG	DEGREE
DWG	DRAWING
E/A	EXHAUST AIR
EAT	ENTERING AIR TEMPERATURE
EF	EXHAUST FAN
EG	ETHYLENE GLYCOL
ET	EXPANSION TANK
EXH	EXHAUST
EWT	ENTERING WATER TEMPERATURE
ESP	EXTERNAL STATIC PRESSURE
EGT	ENTERING GLYCOL TEMPERATURE
EXIST	EXISTING
FT	FEET
FPM	FEET PER MINUTE
FPF	FINS PER FOOT
FC	FORWARD CURVE
F	FAHRENHEIT
FCO	FLOOR CLEAN OUT
FD	FIRE DAMPER, FLOOR DRAIN
FSD	FIRE SMOKE DAMPER
FW	FIRE WATER
GPH	GALLONS PER HOUR
GPM	GALLONS PER MINUTE
GI	GREASE INTERCEPTOR
GT	GLYCOL TANK
HB	HOSE BIBB
HC	HEATING COIL
HD	HEAD
HGR	HEATING GLYCOL RETURN
HGS	HEATING GLYCOL SUPPLY
HWR	HEATING WATER RETURN
HWS	HEATING WATER SUPPLY
HW	HOT WATER
HWC	HOT WATER CIRCULATED
HP	HORSEPOWER
ID	INSIDE DIAMETER
IN	INCHES
LAT	LEAVING AIR TEMPERATURE
LF	LINEAL FEET
LGT	LEAVING GLYCOL TEMPERATURE
LWT	LEAVING WATER TEMPERATURE
MAU	MAKE UP AIR UNIT
MAX	MAXIMUM
MBH	THOUSAND BTU PER HOUR
MFGR	MANUFACTURER
M/A	MAKEUP AIR
MIN	MINIMUM
MTD	MOUNTED
NC	NOISE CRITERIA
N.C.	NORMALLY CLOSED
N.O.	NORMALLY OPEN
NSF	NATIONAL SANITARY FOUNDATION
NTCW	NON-TREATED COLD WATER
NTS	NOT TO SCALE
O/A	OUTSIDE AIR
ORL	OVERFLOW RAINLEADER
OW	OILY WASTE
PD	PRESSURE DROP
PG	PROPYLENE GLYCOL
PH	PHASE
PSI	POUNDS PER INCH
PW	PUMPED WASTE
R/A	RETURN AIR
RP	RADIANT PANEL
RPM	REVOLUTIONS PER MINUTE
RL	RAIN LEADER
S/A	SUPPLY AIR
SD	STORM DRAIN
SNGR	SNOWMELT GLYCOL RETURN
SNGS	SNOWMELT GLYCOL SUPPLY
SP	STATIC PRESSURE
T/A	TRANSFER AIR
TEMP	TEMPERATURE
TSP	TOTAL STATIC PRESSURE
TW	TEMPERED WATER
TYP	TYPICAL
UA	USED ANTIFREEZE
UH	UNIT HEATER
UO	USED OIL/LUBE
V	VENT
VEL	VELOCITY
VF	VENTILATION FAN
VFD	VARIABLE FREQUENCY DRIVE
VTR	VENT THROUGH ROOF
WC	WATER COLUMN
WG	WATER GAGE
WCO	WALL CLEAN OUT
WHA	WATER HAMMER ARRESTOR
WH	WATER HEATER
W	WASTE
W/	WITH
W/O	WITHOUT
WPD	WATER PRESSURE DROP
YCO	YARD CLEAN OUT

GLYCOL MAKE-UP TANK SCHEDULE

SYMBOL	MFGR / MODEL	FUNCTION	FLUID	CAPACITY (GALLONS)	DIMENSIONS	MATERIAL	ELECTRICAL DATA WATTS	ELECTRICAL DATA VOLTS/PH	LABEL	REMARKS
GT-1	AXIOM / MF300	SNOWMELT GLYCOL MAKE-UP	50% P.G.	17.0	12"Wx12"Lx36"H	PLASTIC	50 WATTS	120/1	---	WITH PACKAGED PUMP, CONTROLS, LOW PRESSURE ALARM PANEL AND REMOTE MONITORING DRY CONTACTS

FUEL TANK SCHEDULE

SYMBOL	MFGR / MODEL	FUNCTION	FLUID	CAPACITY (GALLONS)	MATERIAL	LABEL	REMARKS FOR BOTH FT-1 AND FT-2
FT-1	ANCHORAGE TANK* / PER MFGR	STORAGE	GASOLINE	2,000	STEEL	UL/STI	DOUBLE WALL ABOVE GROUND SADDLE MOUNT TANK ON SKIDS WITH TANK OR SKID MOUNTED FUEL DISPENSING PUMP SYSTEM, WEATHERPROOF COATING, ACCESS LADDER, PRIMARY
FT-2	ANCHORAGE TANK* / PER MFGR	STORAGE	DIESEL	2,000	STEEL	UL/STI	SECONDARY EMERGENCY VENTS, PRIMARY VENT, VISUAL LEVEL GAUGE, LOW-FILL WITH SPILL CONTAINER, INTERSTITIAL SPACE LEAK INDICATOR, FILL-LIMITING DEVICE, MANUAL GAUGE
							OPENING, AND ADDITIONAL TAPPINGS AS NEEDED, TANK SHALL BE FULLY FACTORY ASSEMBLED AND TESTED AND SHALL BE TURN-KEY READY FROM THE FACTORY ONCE PERMANENT
							POWER IS PROVIDED TO TANK, PUMPS SHALL BE SIZED/SELECTED BY TANK MANUFACTURER, COORDINATE WITH ELECTRICAL FOR AVAILABLE POWER TO PUMPS, COORDINATE WITH
							END USER AND MAT-SU BOROUGH TO DETERMINE IF OPTIONAL TANK EQUIPMENT IS DESIRED (HIGH CAPACITY FILL NOZZLES, HOSE REELS, FUEL METERS, ETC.). DESIGN INTENT IS
							THAT REMOTE MONITORING OR INDIVIDUAL PERSONNEL FUEL TRACKING IS NOT NECESSARY, PUMPS ARE TO BE TURNED ON/OFF VIA DISCONNECT LOCATED WITHIN THE BUILDING
							(SEE ELECTRICAL), INTERNET CONNECTION OR ETHERNET CABLING IS NOT ANTICIPATED TO BE REQUIRED AT TANKS

*OTHER ACCEPTABLE MANUFACTURERS ARE ACE TANK OR GREER TANK.

TEMPERING VALVE SCHEDULE

SYMBOL	MFGR / MODEL	INLET SIZES	OUTLET SIZE	MINIMUM FLOW RATE (GPM)	FLOW RATE AT 5 PSI DROP (GPM)	CV	FINISH	LABEL	COMPLIANCE	REMARKS
TV-1	WATTS / LFN170-M3	1-1/2"	1-1/2"	5.0	35	15.7	BRASS	ASSE 1017	CSA B125.3	LEAD FREE, SET OUTLET TEMPERATURE FOR 115°F

PUMP SCHEDULE

SYMBOL	MFGR / MODEL	SERVICE	FLUID	GPM	HEAD FT	RPM	MOTOR DATA HP	MOTOR DATA VOLTS/PH	REMARKS
BC-1/2	GRUNDFOS / UPS 40-160/2	BOILER CIRCULATION	WATER	47	19'	3,450	3/4	120/1	CAST IRON, IN-LINE, SET INITIALLY TO SPEED 2
BC-3	GRUNDFOS / UPS 40-160/2	SNOWMELT BOILER CIRCULATION	50% P.G.	39	25'	3,450	3/4	120/1	CAST IRON, IN-LINE, SET INITIALLY TO SPEED 2, PROVIDE WITH PROPYLENE GLYCOL RATED SEALS IF AVAILABLE
CP-1A*	TACO / KV3009	BUILDING HEAT	WATER	150	55'	1,760	5	460/3	PRIMARY PUMP, VFD, PREMIUM EFFICIENCY MOTOR, CAST IRON, IN-LINE, CLOSE COUPLED
CP-1B*	TACO / KV3009	BUILDING HEAT	WATER	150	55'	1,760	5	460/3	BACKUP PUMP, VFD, PREMIUM EFFICIENCY MOTOR, CAST IRON, IN-LINE, CLOSE COUPLED
CP-2*	TACO / 1919	SNOWMELT SYSTEM	50% P.G.	45	58'	1,760	2	460/3	CAST IRON, IN-LINE, CLOSE COUPLED, PROVIDE WITH PROPYLENE GLYCOL RATED SEALS
CP-3	GRUNDFOS / UP 26-99 F	HOT WATER GENERATOR	WATER	14	21'	---	1/6	120/1	CAST IRON, IN-LINE, CLOSED SYSTEM
CP-4	GRUNDFOS / UP 26-99 F	HOT WATER GENERATOR	WATER	14	21'	---	1/6	120/1	CAST IRON, IN-LINE, CLOSED SYSTEM
HWCP-1	GRUNDFOS / UP 26-96 BF	DOMESTIC HOT WATER CIRCULATION	WATER	5	15'	---	1/12	120/1	BRONZE CONSTRUCTION, IN-LINE, APPROVED FOR POTABLE WATER, NSF 61
SP-1	LIBERTY PUMPS/ 241	PUMP ROOM SUMP PUMP	WATER	15	15'	---	1/4	120/1	QUICK-DISCONNECT 10' POWER CORD, MECHANICALLY ACTIVATED MERCURY-FREE WIDE-ANGLE FLOAT

*A GRUNDFOS MANUFACTURED PUMP WITH ADEQUATE PERFORMANCE CAPABILITY AT THIS PUMP'S DUTY POINT WAS NOT AVAILABLE, SO A TACO MANUFACTURED PUMP WITH BETTER PERFORMANCE AT THE SCHEDULED DUTY POINT IS BEING PROVIDED.

AIR SEPARATOR SCHEDULE

SYMBOL	MFGR / MODEL	SYSTEM	FLUID	GPM	WPD (FT. HD)	INLET/OUTLET SIZE	DIMENSIONS	LABEL	REMARKS
AS-1	SPIROTHERM / VDT-400	BUILDING HEAT SYSTEM	WATER	150	<1'	4"	31.4"H x 8.6"ø	---	COMBINATION AIR AND DIRT SEPARATOR WITH AUTO AIR VENT
AS-2	SPIROTHERM / VDT-250	SNOWMELT SYSTEM	50% P.G.	45	<1'	2-1/2"	25.3"H x 6.3"ø	---	COMBINATION AIR AND DIRT SEPARATOR WITH AUTO AIR VENT

BOILER SCHEDULE

SYMBOL	MFGR / MODEL	SERVICE	FLUID	FUEL	INPUT (MBH)	GROSS OUTPUT (MBH)	BURNER HP	BURNER VOLTS/PH	LABEL	REMARKS
B-1	WEIL MCLAIN / SF750	BUILDING HEAT	WATER	NATURAL GAS	750	702	FR	120/1	ASME	WITH TRIM PER INTERNATIONAL MECHANICAL CODE CHAPTER 10, ASME CSD-1 COMPLIANT, AND CONDENSATE NEUTRALIZING KIT
B-2	WEIL MCLAIN / SF750	BUILDING HEAT	WATER	NATURAL GAS	750	702	FR	120/1	ASME	WITH TRIM PER INTERNATIONAL MECHANICAL CODE CHAPTER 10, ASME CSD-1 COMPLIANT, AND CONDENSATE NEUTRALIZING KIT
B-3	WEIL MCLAIN / SF550	SNOWMELT	50% P.G.	NATURAL GAS	550	517	FR	120/1	ASME	WITH TRIM PER INTERNATIONAL MECHANICAL CODE CHAPTER 10, ASME CSD-1 COMPLIANT, AND CONDENSATE NEUTRALIZING KIT

HYDRONIC UNIT HEATER SCHEDULE

SYMBOL	MFGR / MODEL	CAPACITY (MBH)	GPM	FLUID	EFT	LFT	WPD (FT HD)	CFM	MOTOR DATA HP	MOTOR DATA VOLTS/PH	REMARKS
UH-1	MODINE / HC-63	26.0	4.7	WATER	140°F	120°F	<1'	1,120	1/12	120/1	HORIZONTAL UNIT HEATER, SIDE CONNECTIONS
UH-2	MODINE / HC-63	26.0	4.7	WATER	140°F	120°F	<1'	1,120	1/12	120/1	HORIZONTAL UNIT HEATER, SIDE CONNECTIONS
UH-3	MODINE / HC-24	9.3	1.7	WATER	140°F	120°F	<1'	370	1/25	120/1	HORIZONTAL UNIT HEATER, SIDE CONNECTIONS
UH-4	MODINE / HC-24	9.3	1.7	WATER	140°F	120°F	<1'	370	1/25	120/1	HORIZONTAL UNIT HEATER, SIDE CONNECTIONS
CUH-1	MODINE / WCC-06	34.1	6.0	WATER	140°F	120°F	<11'	615	1/20	120/1	DOUBLE ROW, RECESSED CEILING MOUNT CABINET UNIT HEATER, FRONT AIR INLET/OUTLET, PERMA-LAP FRAME, ENCLOSURE COLOR PER ARCHITECT
CUH-2	MODINE / WCC-06	34.1	6.0	WATER	140°F	120°F	<11'	615	1/20	120/1	DOUBLE ROW, RECESSED CEILING MOUNT CABINET UNIT HEATER, FRONT AIR INLET/OUTLET, PERMA-LAP FRAME, ENCLOSURE COLOR PER ARCHITECT
CUH-3	MODINE / WCC-06	25.3	4.4	WATER	140°F	120°F	<1'	620	1/20	120/1	SINGLE ROW, EXPOSED WALL MOUNT CABINET UNIT HEATER, FRONT AIR INLET/OUTLET, INVERTED FLOW, ENCLOSURE COLOR PER ARCHITECT

FUEL FIRED UNIT HEATER SCHEDULE

SYMBOL	MFGR / MODEL	FUEL	INPUT (MBH)	OUTPUT (MBH)	CFM	MOTOR DATA HP	MOTOR DATA VOLTS/PH	REMARKS
GUH-1	MODINE / PTS-200	GAS	200	164	2,870	1/3	120/1	SINGLE STAGE NATURAL GAS, STANDARD FAN GUARD, PROVIDE WITH VERTICAL CONCENTRIC VENT KIT FOR ROOF VENT/INLET TERMINATION
GUH-2	MODINE / PTS-200	GAS	200	164	2,870	1/3	120/1	SINGLE STAGE NATURAL GAS, STANDARD FAN GUARD, PROVIDE WITH VERTICAL CONCENTRIC VENT KIT FOR ROOF VENT/INLET TERMINATION
GUH-3	MODINE / PTS-200	GAS	200	164	2,870	1/3	120/1	SINGLE STAGE NATURAL GAS, STANDARD FAN GUARD, PROVIDE WITH VERTICAL CONCENTRIC VENT KIT FOR ROOF VENT/INLET TERMINATION
GUH-4	MODINE / PTS-200	GAS	200	164	2,870	1/3	120/1	SINGLE STAGE NATURAL GAS, STANDARD FAN GUARD, PROVIDE WITH VERTICAL CONCENTRIC VENT KIT FOR ROOF VENT/INLET TERMINATION
GUH-5	MODINE / PTS-175	GAS	175	143.5	2,725	1/6	120/1	SINGLE STAGE NATURAL GAS, STANDARD FAN GUARD, PROVIDE WITH VERTICAL CONCENTRIC VENT KIT FOR ROOF VENT/INLET TERMINATION
GUH-6	MODINE / PTS-175	GAS	175	143.5	2,725	1/6	120/1	SINGLE STAGE NATURAL GAS, STANDARD FAN GUARD, PROVIDE WITH VERTICAL CONCENTRIC VENT KIT FOR ROOF VENT/INLET TERMINATION
GUH-7	MODINE / PTS-175	GAS	175	143.5	2,725	1/6	120/1	SINGLE STAGE NATURAL GAS, STANDARD FAN GUARD, PROVIDE WITH VERTICAL CONCENTRIC VENT KIT FOR ROOF VENT/INLET TERMINATION
GUH-8	MODINE / PTS-175	GAS	175	143.5	2,725	1/6	120/1	SINGLE STAGE NATURAL GAS, STANDARD FAN GUARD, PROVIDE WITH VERTICAL CONCENTRIC VENT KIT FOR ROOF VENT/INLET TERMINATION

Burkhart Croft
ARCHITECTS LLC
880 N Street Suite 302 | Anchorage Alaska 99501
T: 907.929.9334 | www.burkhart-croft.com

HZA
ENGINEERING SOLUTIONS
HZA Engineering, LLC
113 W. Northern Lights Blvd., Suite 240
Anchorage, Alaska 99503
Tel. (907) 562-1012 Fax (907) 562-1013
AK Corporation # AECL081

MATANUSKA-SUSITNA BOROUGH

MSB FIRE STATION 6-2

WASILLA, ALASKA

DATE: 5/9/2018

DRAWN: MS

CHECKED: TCH

PROJECT: 2017.064.0

DRAWING TITLE:
ABBREVIATIONS AND SCHEDULES

REVISIONS:

SHEET NO:

M0.2

RADIANT HEATING SCHEDULE

ZONE	MANIFOLD	AREA (SQ. FT.)	BTUH PER SQ. FT.	NO. OF LOOPS	ACTIVE LOOP LENGTH	LOOP FLOW (GPM)	TOTAL ZONE FLOW (GPM)	ON CENTER TUBE SPACING	TUBE SIZE	LOOP PRESSURE DROP (FT. HD.)	LOOP ARRANGEMENT	SYSTEM TEMP.	TEMP. DROP	FLUID	REMARKS
A	R-1	1,335	35	7	255'	0.67	4.7	9"	5/8"	<2'	COUNTERFLOW	140°F	20°F	WATER	APPARATUS BAY, 1" SUPPLY/RETURN MANIFOLDS
B	R-2	1,945	35	10	260'	0.68	6.8	9"	5/8"	<3'	COUNTERFLOW	140°F	20°F	WATER	APPARATUS BAY, 1-1/4" SUPPLY/RETURN MANIFOLDS
C	R-3	1,945	35	10	260'	0.68	6.8	9"	5/8"	<3'	COUNTERFLOW	140°F	20°F	WATER	APPARATUS BAY, 1-1/4" SUPPLY/RETURN MANIFOLDS
D	R-4	1,800	35	9	267'	0.7	6.3	9"	5/8"	<3'	COUNTERFLOW	140°F	20°F	WATER	APPARATUS BAY, 1-1/4" SUPPLY/RETURN MANIFOLDS
E	R-5	1,330	35	7	254'	0.67	4.7	9"	5/8"	<2'	COUNTERFLOW	140°F	20°F	WATER	GENERAL USE BAY, 1" SUPPLY/RETURN MANIFOLDS
F	R-6	2,115	35	11	257'	0.67	7.4	9"	5/8"	<3'	COUNTERFLOW	140°F	20°F	WATER	GENERAL USE BAY, 1-1/4" SUPPLY/RETURN MANIFOLDS
G	R-7	1,290	35	7	247'	0.65	4.5	9"	5/8"	<2'	COUNTERFLOW	140°F	20°F	WATER	GENERAL USE BAY, 1" SUPPLY/RETURN MANIFOLDS
H	R-8	1,290	35	7	247'	0.65	4.5	9"	5/8"	<2'	COUNTERFLOW	140°F	20°F	WATER	GENERAL USE BAY, 1" SUPPLY/RETURN MANIFOLDS
I	R-9	635	35	4	212'	0.56	2.2	9"	5/8"	<2'	COUNTERFLOW	140°F	20°F	WATER	PLAN WEST BEDROOMS, 1" SUPPLY/RETURN MANIFOLDS
J	R-10	635	35	4	212'	0.56	2.2	9"	5/8"	<2'	COUNTERFLOW	140°F	20°F	WATER	PLAN EAST BEDROOMS, 1" SUPPLY/RETURN MANIFOLDS

SNOWMELT HEATING SCHEDULE

ZONE	MANIFOLD	AREA (SQ. FT.)	BTUH PER SQ. FT.	NO. OF LOOPS	ACTIVE LOOP LENGTH	LOOP FLOW (GPM)	TOTAL ZONE FLOW (GPM)	ON CENTER TUBE SPACING	TUBE SIZE	LOOP PRESSURE DROP (FT. HD.)	LOOP ARRANGEMENT	SYSTEM TEMP.	TEMP. DROP	FLUID	REMARKS
A	SN-1	870	125	4	261'	2.6	10.4	10"	3/4"	<14'	COUNTERFLOW	140°F	25°F	50% P.G.	APPARATUS BAY APRON, 1-1/4" SUPPLY/RETURN MANIFOLDS
B	SN-2	840	125	4	252'	2.5	10.0	10"	3/4"	<13'	COUNTERFLOW	140°F	25°F	50% P.G.	APPARATUS BAY APRON, 1-1/4" SUPPLY/RETURN MANIFOLDS
C	SN-3	820	125	4	246'	2.4	9.6	10"	3/4"	<12'	COUNTERFLOW	140°F	25°F	50% P.G.	ENTRY SIDEWALKS, 1-1/4" SUPPLY/RETURN MANIFOLDS
D	SN-4	465	125	3	186'	1.8	5.4	10"	3/4"	<6'	COUNTERFLOW	140°F	25°F	50% P.G.	SIDE ENTRY SIDEWALKS, 1-1/4" SUPPLY/RETURN MANIFOLDS
E	SN-5	770	125	4	231'	2.3	9.2	10"	3/4"	<10'	COUNTERFLOW	140°F	25°F	50% P.G.	GENERAL USE BAY APRON, 1-1/4" SUPPLY/RETURN MANIFOLDS

BASEBOARD RADIATION SCHEDULE

SYMBOL	MFGR / MODEL	OUTPUT (BTU/LF)	FLUID	EFT	LFT	TUBE SIZE	ELEMENT FIN SIZE	FIN PER FOOT	FIN THICKNESS	NUMBER OF TIERS	MOUNTING HEIGHT	ENCLOSURE THICKNESS	REMARKS
BB-1	STERLING / JV20B-S C3/4-45	770	WATER	140°F	120°F	3/4"ø Cu	4-1/4" x 4-1/4"	50	0.020" AL	1	24"	18 GA	LOW OPERATING WATER TEMPERATURE, VERSA-LINE LT SERIES, ENCLOSURE COLOR PER ARCHITECT

VAV BOX SCHEDULE

SYMBOL	REHEAT COIL SYMBOL	BOX MFGR	BOX MODEL	INLET SIZE (IN.)	MAX. CFM	MIN. CFM	BOX SP LOSS (IN. WG.)	DOWNSTREAM SP (IN. WG.)	MAX NC	REHEAT COIL: NUMBER OF ROWS	EAT	LAT	MINIMUM BRANCH PIPE SIZE	GPM	FLUID	EFT	LFT	WPD (FT. HD.)	REMARKS
VAV-1	RHC-1	TRANE	VCWF	14"ø	1,370	960	<0.2"	0.5"	<30	2 ROW	55°F	95°F	1"	3.9	WATER	140°F	110°F	<1'	HEATING PERFORMANCE BASED ON BOX MINIMUM AIR FLOW, PROVIDE WITH 1" FOIL FACED INSULATION
VAV-2	RHC-2	TRANE	VCWF	8"ø	600	300	<0.2"	0.5"	<30	1 ROW	55°F	77°F	1/2"	0.5	WATER	140°F	110°F	<1'	HEATING PERFORMANCE BASED ON BOX MINIMUM AIR FLOW, PROVIDE WITH 1" FOIL FACED INSULATION
VAV-3	RHC-3	TRANE	VCWF	8"ø	745	370	<0.3"	0.5"	<30	1 ROW	55°F	79°F	3/4"	1.1	WATER	140°F	110°F	<3'	HEATING PERFORMANCE BASED ON BOX MINIMUM AIR FLOW, PROVIDE WITH 1" FOIL FACED INSULATION
VAV-4	RHC-4	TRANE	VCWF	10"ø	1,000	500	<0.4"	0.5"	<30	2 ROW	55°F	85°F	3/4"	1.1	WATER	140°F	110°F	<1'	HEATING PERFORMANCE BASED ON BOX MINIMUM AIR FLOW, PROVIDE WITH 1" FOIL FACED INSULATION
VAV-5	RHC-5	TRANE	VCWF	10"ø	1,000	500	<0.4"	0.5"	<30	2 ROW	55°F	85°F	3/4"	1.1	WATER	140°F	110°F	<1'	HEATING PERFORMANCE BASED ON BOX MINIMUM AIR FLOW, PROVIDE WITH 1" FOIL FACED INSULATION
VAV-6	RHC-6	TRANE	VCWF	10"ø	1,100	550	<0.3"	0.5"	<30	1 ROW	55°F	78°F	3/4"	1.1	WATER	140°F	110°F	<4'	HEATING PERFORMANCE BASED ON BOX MINIMUM AIR FLOW, PROVIDE WITH 1" FOIL FACED INSULATION
VAV-7	RHC-7	TRANE	VCWF	10"ø	1,000	500	<0.4"	0.5"	<30	2 ROW	55°F	81°F	1/2"	0.9	WATER	140°F	110°F	<1'	HEATING PERFORMANCE BASED ON BOX MINIMUM AIR FLOW, PROVIDE WITH 1" FOIL FACED INSULATION
VAV-8	RHC-8	TRANE	VCWF	10"ø	1,000	500	<0.4"	0.5"	<30	2 ROW	55°F	81°F	1/2"	0.9	WATER	140°F	110°F	<1'	HEATING PERFORMANCE BASED ON BOX MINIMUM AIR FLOW, PROVIDE WITH 1" FOIL FACED INSULATION
VAV-9	RHC-9	TRANE	VCWF	8"ø	580	290	<0.2"	0.5"	<30	1 ROW	55°F	81°F	1/2"	0.9	WATER	140°F	110°F	<2'	HEATING PERFORMANCE BASED ON BOX MINIMUM AIR FLOW, PROVIDE WITH 1" FOIL FACED INSULATION
VAV-10	RHC-10	TRANE	VCWF	8"ø	360	180	<0.1"	0.5"	<30	1 ROW	55°F	79°F	1/2"	0.5	WATER	140°F	110°F	<1'	HEATING PERFORMANCE BASED ON BOX MINIMUM AIR FLOW, PROVIDE WITH 1" FOIL FACED INSULATION
VAV-11	RHC-11	TRANE	VCWF	10"ø	880	440	<0.2"	0.5"	<30	1 ROW	55°F	78°F	1/2"	0.7	WATER	140°F	110°F	<2'	HEATING PERFORMANCE BASED ON BOX MINIMUM AIR FLOW, PROVIDE WITH 1" FOIL FACED INSULATION
VAV-12	RHC-12	TRANE	VCWF	8"ø	390	310	<0.3"	0.5"	<30	3 ROW	55°F	110°F	1"	4.0	WATER	140°F	110°F	<2'	HEATING PERFORMANCE BASED ON BOX MINIMUM AIR FLOW, PROVIDE WITH 1" FOIL FACED INSULATION
VAV-13	RHC-13	TRANE	VCWF	8"ø	400	265	<0.3"	0.5"	<30	3 ROW	55°F	110°F	3/4"	2.6	WATER	140°F	110°F	<1'	HEATING PERFORMANCE BASED ON BOX MINIMUM AIR FLOW, PROVIDE WITH 1" FOIL FACED INSULATION
VAV-14	RHC-14	TRANE	VCWF	6"ø	200	160	<0.1"	0.5"	<30	2 ROW	55°F	110°F	3/4"	2.8	WATER	140°F	110°F	<4'	HEATING PERFORMANCE BASED ON BOX MINIMUM AIR FLOW, PROVIDE WITH 1" FOIL FACED INSULATION
VAV-15	RHC-15	TRANE	VCWF	12"ø	780	620	<0.3"	0.5"	<30	4 ROW	55°F	120°F	1-1/4"	6.7	WATER	140°F	110°F	<4'	HEATING PERFORMANCE BASED ON BOX MINIMUM AIR FLOW, PROVIDE WITH 1" FOIL FACED INSULATION
VAV-16	RHC-16	TRANE	VCWF	12"ø	780	620	<0.3"	0.5"	<30	4 ROW	55°F	120°F	1-1/4"	6.7	WATER	140°F	110°F	<4'	HEATING PERFORMANCE BASED ON BOX MINIMUM AIR FLOW, PROVIDE WITH 1" FOIL FACED INSULATION
VAV-17	RHC-17	TRANE	VCWF	12"ø	940	750	<0.4"	0.5"	<30	4 ROW	55°F	120°F	1-1/2"	13.7	WATER	140°F	110°F	<13'	HEATING PERFORMANCE BASED ON BOX MINIMUM AIR FLOW, PROVIDE WITH 1" FOIL FACED INSULATION
VAV-18	RHC-18	TRANE	VCWF	10"ø	840	420	<0.3"	0.5"	<30	2 ROW	55°F	93°F	3/4"	1.3	WATER	140°F	110°F	<1'	HEATING PERFORMANCE BASED ON BOX MINIMUM AIR FLOW, PROVIDE WITH 1" FOIL FACED INSULATION
VAV-19	RHC-19	TRANE	VCWF	10"ø	630	315	<0.2"	0.5"	<30	2 ROW	55°F	87°F	1/2"	0.7	WATER	140°F	110°F	<1'	HEATING PERFORMANCE BASED ON BOX MINIMUM AIR FLOW, PROVIDE WITH 1" FOIL FACED INSULATION
VAV-20	RHC-20	TRANE	VCWF	12"ø	1,200	600	<0.4"	0.5"	<30	2 ROW	55°F	90°F	3/4"	1.7	WATER	140°F	110°F	<1'	HEATING PERFORMANCE BASED ON BOX MINIMUM AIR FLOW, PROVIDE WITH 1" FOIL FACED INSULATION
VAV-21	RHC-21	TRANE	VCWF	12"ø	1,200	600	<0.4"	0.5"	<30	2 ROW	55°F	90°F	3/4"	1.7	WATER	140°F	110°F	<1'	HEATING PERFORMANCE BASED ON BOX MINIMUM AIR FLOW, PROVIDE WITH 1" FOIL FACED INSULATION
VAV-22	RHC-22	TRANE	VCWF	12"ø	1,200	600	<0.4"	0.5"	<30	2 ROW	55°F	90°F	3/4"	1.7	WATER	140°F	110°F	<1'	HEATING PERFORMANCE BASED ON BOX MINIMUM AIR FLOW, PROVIDE WITH 1" FOIL FACED INSULATION
VAV-23	RHC-23	TRANE	VCWF	12"ø	1,200	600	<0.4"	0.5"	<30	2 ROW	55°F	103°F	1"	5.0	WATER	140°F	110°F	<2'	HEATING PERFORMANCE BASED ON BOX MINIMUM AIR FLOW, PROVIDE WITH 1" FOIL FACED INSULATION
VAV-24	RHC-24	TRANE	VCWF	12"ø	1,200	600	<0.4"	0.5"	<30	2 ROW	55°F	103°F	1"	5.0	WATER	140°F	110°F	<2'	HEATING PERFORMANCE BASED ON BOX MINIMUM AIR FLOW, PROVIDE WITH 1" FOIL FACED INSULATION

ROOFTOP HVAC UNIT SCHEDULE

SYMBOL	MFGR / MODEL	MAX S/A (CFM)	MIN S/A (CFM)	MIN O/A (CFM)	ESP (IN. WG)	COOLING: TONS	EDB	EWB	LDB	AMB TEMP	HEATING: FUEL	INPUT (MBH)	OUTPUT (MBH)	EAT	ELECTRICAL DATA: MCA	MOP	VOLTS/PH	REMARKS FOR BOTH RTU-1 AND RTU-2
RTU-1	TRANE / YCD330	10,625	5,825	2,125	2.0"	27.5	75°F	60°F	55°F	85°F	GAS	350	280	33.5°F	77	90	460/3	PACKAGED CONTROLS, 100% ECONOMIZER WITH DRY BULB CONTROLLER, PACKAGED DX COOLING, DISCHARGE AIR TEMPERATURE
RTU-2	TRANE / YCD330	9,970	5,725	1,994	1.9"	27.5	75°F	60°F	55°F	85°F	GAS	350	280	35.0°F	77	90	460/3	CONTROL KIT, MERV 8 FILTERS, INTEGRAL 100% POWER EXHAUST FAN WITH STATITRAC BUILDING PRESSURE CONTROL, FROSTAT,
																		HINGED ACCESS DOORS, POWERED CONVENIENCE OUTLET, INSULATED ROOF CURB, MODULATING GAS, STAINLESS STEEL EXCHANGER,
																		CONDENSATE OVERFLOW SWITCH, STAINLESS STEEL DRAIN PAN, CO2 SENSING, THROUGH BASE ELEC. WITH DISCONNECT, BACNET
																		COMMUNICATION, S/A FAN VFD, SMOKE SHUTDOWN PER IMC CHAPTER 6, SINGLE POINT POWER CONNECTION, SHAFT GROUNDING

NOTE: PROVIDE RTUs WITH OPTIONAL HIGH FAULT SHORT CIRCUIT CURRENT RATING IF NECESSARY BASED UPON THE AVAILABLE FAULT CURRENT, COORDINATE WITH ELECTRICAL.

STATE OF ALASKA 49TH
Timothy C Hickman
ME-14669
05/09/18
REGISTERED PROFESSIONAL ENGINEER

Burkhart Croft ARCHITECTS LLC
880 N Street Suite 302 | Anchorage Alaska 99501
T: 907.929.9334 | www.burkhart-croft.com

HZA ENGINEERING SOLUTIONS
HZA Engineering, LLC
113 W. Northern Lights Blvd., Suite 240
Anchorage, Alaska 99503
Tel. (907) 562-1012 Fax (907) 562-1013
AK Corporation # AECL081

MATANUSKA-SUSITNA BOROUGH

MSB FIRE STATION 6-2

WASILLA, ALASKA

DATE: 5/9/2018
DRAWN: MS
CHECKED: TCH
PROJECT: 2017.064.0
DRAWING TITLE: SCHEDULES
REVISIONS:
SHEET NO: **M0.3**

FAN SCHEDULE

SYMBOL	MFGR / MODEL	SERVICE	TYPE	CFM	TSP (IN. WG)	MOTOR DATA HP	MOTOR DATA AMPS	MOTOR DATA VOLTS/PH	DRIVE	SONES	REMARKS
EF-1	GREENHECK / SP-A390	LOCKER ROOM EXHAUST	CEILING	300	0.25"	---	1.34	120/1	DIRECT	<4	WITH INTEGRAL BACKDRAFT DAMPER, INSULATED HOUSING, SPEED CONTROLLER, UL LISTED, DESIGNER GRILLE
EF-2	GREENHECK / SP-A390	PUBLIC RESTROOM EXHAUST	CEILING	350	0.3"	---	1.34	120/1	DIRECT	<5	WITH INTEGRAL BACKDRAFT DAMPER, INSULATED HOUSING, SPEED CONTROLLER, UL LISTED, DESIGNER GRILLE
EF-3	GREENHECK / SP-A290	DECON EXHAUST	CEILING	210	0.25"	---	0.72	120/1	DIRECT	<3	WITH INTEGRAL BACKDRAFT DAMPER, INSULATED HOUSING, SPEED CONTROLLER, UL LISTED, DESIGNER GRILLE
EF-4	PANASONIC / FV-11-15VK1	DECON/JAN/LNDRY EXHAUST	CEILING	130	0.25"	---	0.33	120/1	DIRECT	<1	ENERGY STAR RATED, INTEGRAL BACKDRAFT DAMPER AND GRILLE
EF-5	PANASONIC / FV-05-11VK1	JANITOR EXHAUST	CEILING	50	0.25"	---	0.27	120/1	DIRECT	<1	ENERGY STAR RATED, INTEGRAL BACKDRAFT DAMPER AND GRILLE
EF-6	GREENHECK / SQ-90-VG	PUMP ROOM EXHAUST	INLINE	275	0.5"	1/10	---	120/1	DIRECT	<4	WITH EC MOTOR, INSULATED HOUSING, SPEED CONTROLLER, UL LISTED, TENV MOTOR ENCLOSURE, PROVIDE DUCT MOUNTED BACKDRAFT DAMPER
EF-7	PANASONIC / FV-11-15VK1	TOILET/SHOWER EXHAUST	CEILING	130	0.25"	---	0.33	120/1	DIRECT	<1	ENERGY STAR RATED, INTEGRAL BACKDRAFT DAMPER AND GRILLE
EF-8	GREENHECK / SP-A250	GEAR STORAGE EXHAUST	CEILING	180	0.25"	---	0.77	120/1	DIRECT	<2	WITH INTEGRAL BACKDRAFT DAMPER, INSULATED HOUSING, SPEED CONTROLLER, UL LISTED, DESIGNER GRILLE
EF-9	GREENHECK / G-098-VG	TEACHING LAB EXHAUST	DOWNBLAST	560	0.5"	1/4	---	120/1	DIRECT	<9	UL LISTED DOWNBLAST FAN, ROOF MOUNTED, ROOF CURB, EC MOTOR, GRAVITY BACKDRAFT DAMPER, REMOTE SPEED CONTROLLER DIAL LOCATED IN BUILDING
EF-10	PANASONIC / FV-11-15VK1	HOSE STORAGE EXHAUST	CEILING	130	0.25"	---	0.33	120/1	DIRECT	<1	ENERGY STAR RATED, INTEGRAL BACKDRAFT DAMPER AND GRILLE
EF-11	PANASONIC / FV-05-11VK1	TOILET EXHAUST	CEILING	80	0.25"	---	0.27	120/1	DIRECT	<1	ENERGY STAR RATED, INTEGRAL BACKDRAFT DAMPER AND GRILLE
EF-12	GREENHECK / SP-A190	GEAR STORAGE EXHAUST	CEILING	115	0.25"	---	1.3	120/1	DIRECT	<1	WITH INTEGRAL BACKDRAFT DAMPER, INSULATED HOUSING, SPEED CONTROLLER, UL LISTED, DESIGNER GRILLE
EF-13	GREENHECK / SP-A390	COMPRESSOR ROOM EXHAUST	CEILING	230	0.25"	---	1.34	120/1	DIRECT	<3	WITH INTEGRAL BACKDRAFT DAMPER, INSULATED HOUSING, SPEED CONTROLLER, UL LISTED, DESIGNER GRILLE
EF-14	GREENHECK / SQ-85-VG	APP. BAY CONTINUOUS EXHAUST	INLINE	370	0.25"	1/10	---	120/1	DIRECT	<4	WITH SPEED CONTROLLER, EC MOTOR, UL LISTED, INSULATED HOUSING, GALVANIZED INLET GUARD
EF-15	GREENHECK / SQ-80-VG	GEN. BAY CONTINUOUS EXHAUST	INLINE	320	0.25"	1/10	---	120/1	DIRECT	<4	WITH SPEED CONTROLLER, EC MOTOR, UL LISTED, INSULATED HOUSING, GALVANIZED INLET GUARD
EF-16	GREENHECK / G-183-VG	APP. BAY PURGE EXHAUST	DOWNBLAST	2,775	0.4"	1	---	208/1	DIRECT	<11	UL LISTED, ROOF MOUNTED, ROOF CURB, EC MOTOR, GRAVITY BACKDRAFT DAMPER, REMOTE SPEED CONTROLLER DIAL LOCATED IN BUILDING, TEFC MOTOR
EF-17	GREENHECK / G-183-VG	APP. BAY PURGE EXHAUST	DOWNBLAST	2,775	0.4"	1	---	208/1	DIRECT	<11	UL LISTED, ROOF MOUNTED, ROOF CURB, EC MOTOR, GRAVITY BACKDRAFT DAMPER, REMOTE SPEED CONTROLLER DIAL LOCATED IN BUILDING, TEFC MOTOR
EF-18	GREENHECK / G-163-VG	GEN. BAY PURGE EXHAUST	DOWNBLAST	2,400	0.4"	1	---	208/1	DIRECT	<13	UL LISTED, ROOF MOUNTED, ROOF CURB, EC MOTOR, GRAVITY BACKDRAFT DAMPER, REMOTE SPEED CONTROLLER DIAL LOCATED IN BUILDING, TEFC MOTOR
EF-19	GREENHECK / G-163-VG	GEN. BAY PURGE EXHAUST	DOWNBLAST	2,400	0.4"	1	---	208/1	DIRECT	<13	UL LISTED, ROOF MOUNTED, ROOF CURB, EC MOTOR, GRAVITY BACKDRAFT DAMPER, REMOTE SPEED CONTROLLER DIAL LOCATED IN BUILDING, TEFC MOTOR
VF-1	GREENHECK / SS1-16-428-A5	MECHANICAL ROOM COOLING	PROPELLER	1,900	0.3"	1/2	---	120/1	DIRECT	<11	WITH UNIT MOUNTED SPEED CONTROLLER, UL LISTED, OSHA APPROVED MOTOR SIDE GUARD
VF-2	GREENHECK / SS1-16-436-A7	SCBA ROOM COOLING	PROPELLER	3,000	0.35"	3/4	---	120/1	DIRECT	<13	WITH UNIT MOUNTED SPEED CONTROLLER, UL LISTED, OSHA APPROVED MOTOR SIDE GUARD
CF-1	LEADING EDGE / 60001	DE-STRATIFICATION	CEILING	46,000	---	---	1.4	120/1	DIRECT	---	WITH ONE REMOTE MOTOR SPEED CONTROLLER FOR OPERATING TWO FANS
RH-1	DENLAR / D1036-I-DF NFPA101	RANGE HOOD	INLINE	510	---	---	5.0	120/1	DIRECT	---	36" HOOD, INTEGRAL FIRE SUPPRESSION SYSTEM, GAS SHUT-OFF VALVE, IN-LINE DUCT FAN, MANUAL PULL STATION

GRILLE - REGISTER - DIFFUSER SCHEDULE

SYMBOL	MFGR / MODEL	TYPE	SERVICE	MATERIAL	FINISH	FACE SIZE (INCHES)	NECK SIZE (INCHES)	THROW	NC	REMARKS
SA	TITUS / TMSA	DIFFUSER	S/A	STEEL	WHITE	24/24	8"	4-WAY	<30	FRAME FOR GWB OR T-BAR CEILING AS REQUIRED
SB	TITUS / TMSA	DIFFUSER	S/A	STEEL	WHITE	24/24	6"	4-WAY	<30	FRAME FOR GWB OR T-BAR CEILING AS REQUIRED
SC	TITUS / TMSA	DIFFUSER	S/A	STEEL	WHITE	12/12	6"	4-WAY	<30	WITH 24/24 MODULE FOR T-BAR CEILING LOCATIONS, FRAME FOR GWB OR T-BAR CEILING AS REQUIRED
SD	TITUS / TBDI-30	DIFFUSER	S/A	STEEL	WHITE	4'/3 SLOT	10"	2-WAY	<30	1" SLOTS, INSULATED PLENUM, FRAME FOR GWB OR T-BAR CEILING AS REQUIRED, PROVIDE WITH OPTIONAL CROSS NOTCH WHERE REQUIRED
SE	TITUS / 300FL	GRILLE	S/A	ALUMINUM	WHITE	12/8	12/8	2-WAY	<30	FRAME FOR SIDEWALL MOUNT, FRONT BLADES PARALLEL WITH LONG DIMENSION, PROVIDE WITH 10"ø BRANCH DUCTWORK UNLESS OTHERWISE INDICATED
SF	TITUS / CT-480	DIFFUSER	S/A	ALUMINUM	WHITE	24/6	---	1-WAY	<20	PENCIL PROOF, 1/8" BARS, 1/4" SPACING, ZERO DEFLECTION, HEAVY DUTY FRAME AND CORE FOR FLOOR INSTALLATION, PROVIDE WITH 10"ø BRANCH DUCTWORK
RA	TITUS / 50F	GRILLE	R/A	ALUMINUM	WHITE	14/14	---	---	<20	WITH 24/24 MODULE FOR T-BAR CEILING LOCATIONS, FRAME FOR GWB OR T-BAR CEILING AS REQUIRED
RB	TITUS / 50F	GRILLE	R/A	ALUMINUM	WHITE	18/18	---	---	<20	WITH 24/24 MODULE FOR T-BAR CEILING LOCATIONS, FRAME FOR GWB OR T-BAR CEILING AS REQUIRED
TA	TITUS / 350FL	GRILLE	T/A	ALUMINUM	WHITE	30/8	---	---	<20	FRAME FOR SIDEWALL MOUNTING
EA	TITUS / 50F	GRILLE	E/A	ALUMINUM	WHITE	14/14	14/14	---	<20	WITH 24/24 MODULE FOR T-BAR CEILING LOCATIONS, FRAME FOR GWB OR T-BAR CEILING AS REQUIRED, PROVIDE WITH 10"ø BRANCH DUCTWORK

LOUVER SCHEDULE

SYMBOL	MFGR / MODEL	SERVICE	MATERIAL	FINISH	FACE SIZE (INCHES)	FREE AREA	REMARKS
L-1	RUSKIN / ELF6375DX	APP. BAY MAKE-UP AIR	ALUMINUM	PER ARCH	40"W X 28"H	57%	DRAINABLE, COLOR AND FINISH BY ARCHITECT, COORDINATE LOCATION WITH ARCHITECTURAL ELEVATION PLANS
L-2	RUSKIN / ELF6375DX	APP. BAY MAKE-UP AIR	ALUMINUM	PER ARCH	40"W X 28"H	57%	DRAINABLE, COLOR AND FINISH BY ARCHITECT, COORDINATE LOCATION WITH ARCHITECTURAL ELEVATION PLANS
L-3	RUSKIN / ELF6375DX	GEN. BAY MAKE-UP AIR	ALUMINUM	PER ARCH	62"W X 18"H	57%	DRAINABLE, COLOR AND FINISH BY ARCHITECT, COORDINATE LOCATION WITH ARCHITECTURAL ELEVATION PLANS
L-4	RUSKIN / ELF6375DX	GEN. BAY MAKE-UP AIR	ALUMINUM	PER ARCH	62"W X 18"H	57%	DRAINABLE, COLOR AND FINISH BY ARCHITECT, COORDINATE LOCATION WITH ARCHITECTURAL ELEVATION PLANS
L-5	RUSKIN / ELF6375DX	SCBA ROOM COOLING	ALUMINUM	PER ARCH	32"W X 40"H	57%	DRAINABLE, COLOR AND FINISH BY ARCHITECT, COORDINATE LOCATION WITH ARCHITECTURAL ELEVATION PLANS
L-6	RUSKIN / ELF6375DX	SCBA ROOM RELIEF	ALUMINUM	PER ARCH	32"W X 40"H	57%	DRAINABLE, COLOR AND FINISH BY ARCHITECT, COORDINATE LOCATION WITH ARCHITECTURAL ELEVATION PLANS
L-7	RUSKIN / ELF6375DX	MECH ROOM COOLING	ALUMINUM	PER ARCH	26"W X 34"H	57%	DRAINABLE, COLOR AND FINISH BY ARCHITECT, COORDINATE LOCATION WITH ARCHITECTURAL ELEVATION PLANS
L-8	RUSKIN / ELF6375DX	MECH ROOM RELIEF	ALUMINUM	PER ARCH	34"W X 34"H	57%	DRAINABLE, COLOR AND FINISH BY ARCHITECT, COORDINATE LOCATION WITH ARCHITECTURAL ELEVATION PLANS

COMPUTER ROOM AIR CONDITIONING UNIT SCHEDULE

SYMBOL	MFGR / MODEL	SERVICE	NOMINAL (MBH)	INDOOR UNIT ELECTRICAL DATA MCA	INDOOR UNIT ELECTRICAL DATA VOLTS/PHASE	OUTDOOR UNIT ELECTRICAL DATA MCA	OUTDOOR UNIT ELECTRICAL DATA BRKR	OUTDOOR UNIT ELECTRICAL DATA VOLTS/PHASE	REMARKS
CAC-1	MITSUBISHI / MSZ-GA24NA	EVAPORATOR	22	1	208/1	---	---	---	WALL MOUNT, R-410A, WIRED REMOTE CONTROLLER, CND-1 REMOTE CONDENSER, CONDENSATE PUMP, POWERED BY CND-1
CND-1	MITSUBISHI / MUZ-GA24NA	CONDENSER	22	---	---	17	20	208/1	ROOF MOUNT, R-410A, LOW AMBIENT KIT

BALANCE VALVE SCHEDULE

SIZE	FLOW RANGE (GPM)	REMARKS
1/2"	< 1.5	SEE NOTES
3/4"	1.5 - 3.0	SEE NOTES
1"	3.0 - 6.0	SEE NOTES
1-1/4"	6.0 - 11	SEE NOTES
1-1/2"	11 - 17	SEE NOTES
2"	17 - 37	SEE NOTES
2-1/2"	37 - 66	SEE NOTES
3"	66 - 95	SEE NOTES
4"	95 - 180	SEE NOTES
5"	180 - 425	SEE NOTES
6"	425 - 700	SEE NOTES
8"	700 - 925	SEE NOTES

NOTES: VALVE SIZE BASED ON B&G CIRCUIT SETTER, AND PRESSURE DROP OF NOT LESS THAN 1' ACHIEVABLE FOR BALANCING AND NOT IN EXCESS OF 3' WIDE OPEN. SIZES FOR ALTERNATE MANUFACTURERS AND/OR VALVES LARGER THAN INDICATED ON THE SCHEDULE SHALL BE DETERMINED BY THE CONTRACTOR. PRESSURE INDEPENDENT FLOW CONTROL VALVES MAY BE USED WHEN APPROVED BY THE BUILDING OWNER, IN WHICH CASE THE FLOW CONTROL VALVE NEEDS TO BE ADEQUATELY SIZED AND SELECTED BY THE CONTRACTOR AND CORRESPONDING MANUFACTURER.

STATE OF ALASKA
49TH
Timothy C Hickman
ME-14669
05/09/18
REGISTERED PROFESSIONAL ENGINEER

Burkhart Croft
ARCHITECTS LLC
880 N Street Suite 302 | Anchorage Alaska 99501
T: 907.929.9334 | www.burkhart-croft.com

HZA
ENGINEERING SOLUTIONS
HZA Engineering, LLC
113 W. Northern Lights Blvd., Suite 240
Anchorage, Alaska 99503
Tel. (907) 562-1012 Fax (907) 562-1013
AK Corporation # AECL081

MATANUSKA-SUSITNA BOROUGH
MSB FIRE STATION 6-2
WASILLA, ALASKA

DATE: 5/9/2018
DRAWN: MS
CHECKED: TCH
PROJECT: 2017.064.0
DRAWING TITLE: SCHEDULES
REVISIONS:
SHEET NO:
M0.4

SPECIFICATIONS

PLANS
THE CONTRACTOR SHALL PROVIDE ALL MATERIALS AND LABOR NECESSARY FOR A COMPLETE AND OPERABLE SYSTEM. THE DRAWINGS ARE PARTLY DIAGRAMMATIC, NOT NECESSARILY SHOWING ALL OFFSETS OR EXACT LOCATIONS OF PIPING AND DUCTS UNLESS SPECIFICALLY DIMENSIONED. CONTRACTOR SHALL COORDINATE DIFFUSER LOCATIONS WITH ELECTRICAL PLANS AND ARCHITECTURAL REFLECTED CEILING PLANS TO AVOID CONFLICT.

CODE
ALL WORK SHALL BE DONE IN ACCORDANCE WITH THE LATEST ADOPTED EDITION OF THE INTERNATIONAL BUILDING CODE (IBC), INTERNATIONAL FIRE CODE (IFC), INTERNATIONAL MECHANICAL CODE (IMC), UNIFORM PLUMBING CODE (UPC), INTERNATIONAL FUEL GAS CODE (IFGC), AND NATIONAL ELECTRICAL CODE (NEC), AS AMENDED BY THE STATE OF ALASKA. SHEET METAL WORK SHALL BE DONE IN ACCORDANCE WITH SMACNA STANDARDS. ALL POTABLE WATER EQUIPMENT AND MATERIAL SHALL BE LEAD FREE AND IN COMPLIANCE WITH NATIONAL SANITATION FOUNDATION (NSF) STANDARDS 61 AND 60.

PERMITS
THE CONTRACTOR SHALL SECURE AND PAY FOR ALL NECESSARY PERMITS AND FEES.

INSURANCE
THE CONTRACTOR MUST PROVIDE BUILDERS' ALL RISK INSURANCE, WORKERS' COMPENSATION INSURANCE, AND GENERAL LIABILITY INSURANCE AT ALL TIMES WHILE WORKING ON THIS PROJECT.

WARRANTY
ALL WORK PERFORMED UNDER THIS CONTRACT TO BE FREE FROM DEFECTS IN MATERIALS AND WORKMANSHIP FOR A PERIOD OF ONE YEAR FROM ACCEPTANCE. ANY FAULTY MATERIALS OR WORKMANSHIP SHALL BE REPAIRED OR REPLACED TO THE SATISFACTION OF THE OWNER DURING THE GUARANTEE PERIOD.

SHOP DRAWINGS
THE CONTRACTOR SHALL PREPARE SCALED SHOP DRAWINGS FOR THE RADIANT TUBING LAYOUT AND SNOWMELT TUBING LAYOUT FOR REVIEW. RADIANT TUBING AND SNOWMELT TUBING LAYOUT DRAWINGS SHALL BE PRODUCED BY THE TUBING MANUFACTURER OR A MANUFACTURER APPROVED COMPANY.

MATERIALS
ALL MATERIALS SHALL BE NEW AND UNUSED, INSTALLED IN ACCORDANCE WITH THE MANUFACTURER'S DIRECTIONS AND IN THE BEST PRACTICE OF THE CRAFT. OBTAIN OWNER'S APPROVAL OF ALL PRODUCTS PRIOR TO ORDERING OR INSTALLING ANY PART OF ANY SYSTEM. PROVIDE MANUFACTURER'S RECOMMENDED CLEARANCE AND ACCESS TO ALL EQUIPMENT.

EQUIPMENT SUBSTITUTIONS
ALL EQUIPMENT LISTED IS REPRESENTATIVE OF THE STANDARD OF QUALITY AND PERFORMANCE REQUIRED. OR EQUAL. SUBSTITUTIONS WILL BE CONSIDERED IF THE SUBSTITUTES ARE SHOWN TO BE EQUAL OR BETTER QUALITY, INCLUDING EFFICIENCY OF PERFORMANCE, SIZE AND WEIGHT. ALL SUBSTITUTIONS WILL REQUIRE OWNER'S APPROVAL PRIOR TO CONSIDERATION AS AN ALTERNATE PRODUCT.

SUBMITTALS
THE CONTRACTOR SHALL SUBMIT PRODUCT DATA COMPILED IN A BOUND NOTEBOOK OR ELECTRONIC DOCUMENT FOR MECHANICAL SYSTEMS. ALL PRODUCT DATA SHALL BE SUBMITTED AT ONE TIME, PARTIAL SUBMITTALS WILL BE RETURNED WITHOUT REVIEW. PRODUCT DATA SHALL BE APPROPRIATELY MARKED TO INDICATE PROPOSED PRODUCT.

OPERATION AND MAINTENANCE MANUAL
PROVIDE THE OWNER WITH AN OPERATING AND MAINTENANCE MANUAL, TO INCLUDE MANUFACTURER'S SPECIFICATIONS, OPERATING AND MAINTENANCE INSTRUCTIONS, WARRANTY INFORMATION ON EACH PIECE OF EQUIPMENT, START-UP REPORTS, BALANCE REPORT, AND SCHEMATIC DIAGRAMS OF CONTROL SYSTEM AS-BUILTS, AS WELL AS A SOURCE OF SUPPLY FOR SPARE PARTS AND SERVICE.

ACCESS
PROVIDE WORKABLE ACCESS TO ALL SERVICEABLE AND/OR OPERABLE EQUIPMENT. PROVIDE ACCESS DOORS OF REQUIRED RATING FOR ACCESS TO ALL SERVICEABLE AND/OR OPERABLE EQUIPMENT LOCATED ABOVE HARD CEILINGS OR IN WALLS.

SUPPORTS AND ANCHORS
PIPING, DUCTWORK, AND EQUIPMENT SHALL BE ADEQUATELY SUPPORTED IN ACCORDANCE WITH CODE REQUIREMENTS AND GOOD PRACTICE. PIPING SUPPORTS SHALL BE CARBON STEEL, ADJUSTABLE SWIVEL HANGERS WITH THREADED ROD SUPPORT. INSULATED PIPING SHALL BE ROUTED THROUGH HANGERS AND PROVIDED WITH SHEET METAL INSULATION PROTECTION SADDLES. ALL SUPPORTS SHALL BE SECURED TO BUILDING STRUCTURAL ELEMENTS. EQUIPMENT CURB SUPPORTS SHALL BE PREMANUFACTURED OR CONTRACTOR FABRICATED WITH APPROPRIATE FLASHING IN ACCORDANCE WITH ROOFING SYSTEM MANUFACTURER'S REQUIREMENTS. PIPE ANCHORS SHALL BE CONTRACTOR FABRICATED AND SECURED TO BUILDING STRUCTURE TO RESIST PIPING MOVEMENT.

GLYCOL
PROVIDE PRE-MIXED HYDRONIC GRADE PROPYLENE GLYCOL (DOWFROST HD OR EQUAL) AT A RATE OF 50% WATER TO 50% GLYCOL FOR A -30 DEGREES FAHRENHEIT PROTECTION OR BETTER FOR SNOWMELT SYSTEM. PROVIDE 10 GALLONS ADDITIONAL MIX AT THE END OF THE PROJECT.

SLEEVES
PIPING SLEEVES THROUGH FIRE RATED ASSEMBLIES SHALL BE PREMANUFACTURED, UL LISTED ASSEMBLIES. PIPING SLEEVES THROUGH NON-FIRE RATED ASSEMBLIES SHALL BE 18 GAUGE GALVANIZED STEEL. ALL PENETRATIONS THROUGH RATED ASSEMBLIES SHALL COMPLY WITH THE INTERNATIONAL BUILDING CODE CHAPTER 7.

SEISMIC RESTRAINT
PIPING AND DUCTWORK SYSTEMS SHALL BE SEISMICALLY RESTRAINED IN ACCORDANCE WITH SMACNA GUIDELINES FOR SEISMIC RESTRAINT - THIRD EDITION (2008). EQUIPMENT, PIPING, AND DUCTWORK SYSTEMS SHALL BE SEISMICALLY RESTRAINED IN ACCORDANCE WITH THE INTERNATIONAL BUILDING CODE AND ASCE 7. THE CONTRACTOR SHALL BE RESPONSIBLE FOR SEISMIC RESTRAINT DESIGN FOR ALL PIPING, DUCTWORK, AND EQUIPMENT BY RETAINING THE SERVICES OF A PROFESSIONAL STRUCTURAL ENGINEER LICENSED BY THE STATE OF ALASKA. THE CONTRACTOR SHALL PROVIDE STRUCTURAL ENGINEERING CALCULATIONS FOR REVIEW AND APPROVAL BASED ON ACTUAL PIPING LAYOUT, ACTUAL DUCT LAYOUT, AND ACTUAL EQUIPMENT TO BE USED ON THE PROJECT TO THE AUTHORITY HAVING JURISDICTION.

MECHANICAL IDENTIFICATION
PIPING, DUCTWORK, VALVES, AND EQUIPMENT SHALL BE PROVIDED WITH IDENTIFICATION. PIPING, CONCEALED OR EXPOSED, SHALL BE LABELED WITH SELF-ADHESIVE TYPE PIPE MARKERS, INDICATING SERVICE AND FLOW DIRECTION, AT NOT LESS THAN 20 FEET ON CENTER AND AT EACH SIDE OF WALL, FLOOR, AND CEILING PENETRATIONS. DUCTWORK, CONCEALED OR EXPOSED, SHALL BE LABELED WITH PAINTED STENCIL, INDICATING FAN SYSTEM AND FLOW DIRECTION, AT NOT LESS THAN 20 FEET ON CENTER AND AT EACH SIDE OF WALL, FLOOR, AND CEILING PENETRATIONS. VALVES SHALL BE LABELED WITH TAGS INDICATING SERVICE AND VALVE NUMBER CORRESPONDING TO A VALVE DIRECTORY TO BE DELIVERED TO THE OWNER. EQUIPMENT SHALL BE LABELED WITH PLASTIC NAMEPLATES.

INSULATION
ABOVEGROUND COLD WATER, HOT WATER UP TO AND INCLUDING 1", HOT WATER CIRCULATING, HEATING WATER UP TO AND INCLUDING 1", HEATING GLYCOL UP TO AND INCLUDING 1", AND STORM DRAINAGE PIPING SHALL BE INSULATED WITH 1" PRE-FORMED FIBERGLASS INSULATION WITH FACTORY APPLIED VAPOR BARRIER JACKET AND PREMANUFACTURED PLASTIC FITTING INSULATION. HEATING WATER, HEATING GLYCOL, AND HOT WATER 1-1/2" AND LARGER SHALL BE INSULATED WITH 1-1/2" PRE-FORMED FIBERGLASS INSULATION WITH FACTORY APPLIED VAPOR BARRIER JACKET AND PREMANUFACTURED PLASTIC FITTING INSULATION. PROVIDE PVC JACKETING FOR ALL PIPING LOCATED IN THE MECHANICAL ROOM AND FOR ALL EXPOSED PIPING WITHIN 10' OF FINISHED FLOOR. UNDERGROUND COLD WATER PIPING SHALL BE INSULATED WITH 1/2" CLOSED CELL FOAM INSULATION. PLUMBING VTR'S SHALL BE INSULATED WITH 1" PRE-FORMED FIBERGLASS INSULATION WITH FACTORY APPLIED VAPOR BARRIER JACKET DOWN TO 3' WITHIN THE BUILDING. OUTSIDE AND RELIEF AIR DUCTWORK SHALL BE INSULATED WITH 2" RIGID FIBERGLASS INSULATION WITH FACTORY APPLIED VAPOR BARRIER WITH CANVAS COVERING. RTU SUPPLY AND RETURN AIR DUCTWORK SHALL BE INSULATED WITH 1" THICK ANTIMICROBIAL FACED FIBERGLASS DUCT LINER WHERE INDICATED ON PLANS TO PROVIDE SOUND ATTENUATION, DUCT LINER TO BE FINISHED WITH A CLEANABLE SURFACE. CONCEALED EXHAUST AIR DUCTWORK SHALL BE INSULATED WITH 1" RIGID FIBERGLASS INSULATION WITH FACTORY APPLIED VAPOR BARRIER WITH FOIL SCRIM FACING TO A POINT 10' WITHIN THE BUILDING. EXPOSED EXHAUST AIR DUCTWORK SHALL BE INSULATED WITH 2" RIGID FIBERGLASS INSULATION WITH FACTORY APPLIED VAPOR BARRIER WITH CANVAS COVERING TO EXTENT SHOWN ON PLANS. HANDICAPPED ACCESSIBLE SINK P-TRAPS, COLD AND HOT WATER PIPING, AND WASTE PIPING SHALL BE INSULATED WITH PRE-MANUFACTURED INSULATION SYSTEMS. INSULATION LOCATED IN RETURN AIR PLENUMS SHALL MEET OR EXCEED THE APPLICABLE SMOKE/FLAME SPREAD RATINGS.

PIPING
UNDERGROUND SANITARY WASTE, VENT, AND STORM DRAINAGE PIPING SHALL BE ABS DWV. ABOVEGROUND SANITARY WASTE, VENT, AND STORM DRAINAGE PIPING SHALL BE CAST IRON NO-HUB WHEN LOCATED WITHIN A RETURN AIR PLENUM AND ABS DWV WHEN NOT LOCATED WITHIN A RETURN AIR PLENUM. UNDERGROUND TRAP PRIMER WATER PIPING SHALL BE TYPE "K" SOFT COPPER WITH NO JOINTS OR PEX PIPING LISTED FOR POTABLE WATER APPLICATIONS. UNDERGROUND WATER SERVICE MAINS SHALL BE DUCTILE IRON PIPE, CLASS 52. UNDERGROUND IRRIGATION WATER SHALL BE HDPE. ABOVEGROUND WATER PIPING SHALL BE TYPE "L" COPPER OR PEX PIPING LISTED FOR POTABLE WATER APPLICATIONS. HEATING WATER/GLYCOL PIPING SHALL BE TYPE "L" COPPER FOR SIZES LESS THAN 4", SCHEDULE 40 STEEL WITH WELDED FITTINGS FOR SIZES 4" AND LARGER, VICTAULIC FITTINGS NOT ALLOWED. COPPER PIPING SHALL BE SOLDERED WITH LEAD-FREE SOLDER, PRESS FITTINGS SHALL BE ACCEPTABLE UPON ALLOWANCE FROM BUILDING OWNER. INSLAB SNOWMELT AND RADIANT HEAT PIPING SHALL BE A CROSS-LINKED POLYETHYLENE WITH AN OXYGEN DIFFUSION BARRIER AND A MAXIMUM WORKING PRESSURE OF 80 PSI AT 200°F, MANUFACTURED IN ACCORDANCE WITH ASTM F876, WIRSBO OR EQUAL. GAS PIPING SHALL BE SCHEDULE 40 STEEL, THREADED FITTINGS FOR LOW PRESSURE, WELDED FITTINGS FOR MEDIUM PRESSURE. COMPRESSED AIR PIPING SHALL BE SCHEDULE 40 BLACK STEEL WITH THREADED/WELDED FITTINGS PER ANSI B31.1 OR FLEXIBLE TUBING WITH APPROPRIATE PRESSURE/TEMPERATURE RATINGS. PIPING SHALL MEET THE SMOKE AND FLAME SPREAD RATING REQUIRED FOR RETURN AIR PLENUMS WHEN LOCATED WITHIN A CEILING RETURN AIR PLENUM. PIPING WHICH ONLY MEETS THE APPLICABLE SMOKE AND FLAME SPREAD RATING WHEN INSULATED SHALL ONLY BE ALLOWED WHEN APPROVED BY THE BUILDING OWNER. ROUTE PIPES PARALLEL WITH BUILDING LINES UNLESS OTHERWISE INDICATED. CONCEAL ALL PIPING IN FINISHED AREAS UNLESS AUTHORIZED BY BUILDING OWNER.

VALVES
BALL VALVES OR BUTTERFLY VALVES. GATE VALVES AND GLOBE VALVES ARE NOT ACCEPTABLE. VALVES FOR GAS SERVICE SHALL BE AGA APPROVED. BALANCE VALVES SHALL BE B&G CIRCUIT SETTER, OR APPROVED EQUAL. PRESSURE INDEPENDENT FLOW CONTROL VALVES MAY BE USED IN LIEU OF CIRCUIT SETTERS, COORDINATE WITH VALVE MANUFACTURER TO APPROPRIATELY SIZE VALVES. PROVIDE ISOLATION VALVES AT EACH FIXTURE GROUP, PUMP, TERMINAL HEATING UNIT, AND AS SHOWN ON PLANS. PROVIDE BALANCE VALVES AT EACH TERMINAL HEATING UNIT AND WHERE INDICATED ON PLANS. PROVIDE GAS ISOLATION VALVES AT EACH GAS APPLIANCE.

PLUMBING
PLUMBING FIXTURES SHALL BE COMMERCIAL GRADE, MANUFACTURER AND MODEL AS INDICATED ON THE PLUMBING FIXTURE SCHEDULE, OR APPROVED EQUAL. PLUMBING EQUIPMENT SHALL BE COMMERCIAL GRADE, MANUFACTURER AND MODEL AS INDICATED ON THE EQUIPMENT SCHEDULES, OR APPROVED EQUAL. PROVIDE SHOCK-TROL DEVICES AT ALL FIXTURES.

HEATING
HEATING EQUIPMENT SHALL BE COMMERCIAL GRADE, MANUFACTURER AND MODEL AS INDICATED ON THE EQUIPMENT SCHEDULES, OR APPROVED EQUAL. AIR VENTS SHALL BE PROVIDED AT ALL HIGH POINTS OF THE PIPING SYSTEM. LOW POINT DRAINS SHALL BE PROVIDED AT ALL LOW POINTS OF THE PIPING SYSTEM. GAS FIRED APPLIANCE VENTING SHALL BE OF A MANUFACTURER APPROVED MATERIAL AND INSTALLED AS REQUIRED BY THE GAS FIRED APPLIANCE MANUFACTURER.

VENTILATION
VENTILATION EQUIPMENT SHALL BE COMMERCIAL GRADE, MANUFACTURER AND MODEL AS INDICATED ON THE EQUIPMENT SCHEDULES, OR APPROVED EQUAL. DUCTWORK SHALL BE GALVANIZED SHEET METAL, RECTANGULAR OR ROUND AS INDICATED ON PLANS, WHERE RECTANGULAR DUCTWORK IS INDICATED, ROUND MAY BE USED WHEN APPROVED BY THE ENGINEER. DIMENSIONS SHOWN FOR DUCTWORK ARE THE INSIDE CLEAR DIMENSIONS, CONTRACTOR SHALL ADD TO THE DUCT ALLOWANCES FOR SOUNDLINING. DUCTWORK SHALL BE CONSTRUCTED, INSTALLED, AND TESTED IN ACCORDANCE WITH SMACNA STANDARDS. ACOUSTICAL TURNING VANES SHALL BE PROVIDED AT RECTANGULAR DUCTWORK ELBOWS. VOLUME DAMPERS SHALL BE PROVIDED AT EACH DIFFUSER BRANCH DUCT UNLESS DIFFUSER IS SCHEDULED TO BE PROVIDED WITH INTEGRAL DAMPER. WHERE DAMPERS ARE LOCATED ABOVE HARD CEILING PROVIDE REMOTE OPERATORS. FIRE/SMOKE DAMPERS SHALL BE INSTALLED IN ACCORDANCE WITH THE MANUFACTURER'S RECOMMENDATIONS AND THEIR LISTINGS. COORDINATE CONNECTION AND VOLTAGE OF ELECTRIC MOTORS WITH ELECTRICAL. ALL DUCTWORK SHALL BE CONSTRUCTED TO NOT LESS THAN SMACNA CLASSIFICATION +/- 1"WG. RTU MEDIUM PRESSURE S/A DUCTWORK SHALL BE CONSTRUCTED TO SMACNA CLASSIFICATION +/- 2"WG.

FIRE PROTECTION
THE ENTIRE BUILDING SHALL BE PROVIDED WITH A SPRINKLER SYSTEM IN ACCORDANCE WITH NFPA 13 REQUIREMENTS. PROVIDE COMPLETE INTERFACE WITH THE BUILDING SMOKE AND FIRE ALARM SYSTEM. PROVIDE VALVE SUPERVISION, WATER FLOW ALARMS, AND TROUBLE SIGNAL MONITORING SYSTEM WHICH WILL AUTOMATICALLY TRANSMIT TO AN APPROVED STATION. THE CONTRACTOR SHALL DESIGN THE SYSTEM, BY A PERSON NICET LEVEL III OR IV CERTIFIED, OR REGISTERED FIRE PROTECTION ENGINEER. THE CONTRACTOR SHALL SUBMIT DRAWINGS IN ACCORDANCE WITH NFPA 13 REQUIREMENTS TO THE AUTHORITY HAVING JURISDICTION AND THE OWNER. NO WET PIPING SHALL BE INSTALLED OUTSIDE THE THERMAL ENVELOPE OF THE BUILDING. PLASTIC PIPING IS NOT ALLOWED. DRY PIPE SYSTEMS SHALL BE SCHEDULE 40 GALVANIZED STEEL, NO SUBSTITUTIONS. PIPE FITTINGS SHALL BE VICTAULIC OR APPROVED EQUAL. VESTIBULE AREAS SHALL BE PROVIDED WITH DRY PENDANT HEADS OR A DRY SYSTEM AS REQUIRED FOR COVERAGE.

CONTROLS SYSTEMS
THE CONTRACTOR SHALL PROVIDE A COMPLETE AND OPERATIONAL CONTROL SYSTEM AS REQUIRED TO PROVIDE EQUIPMENT CONTROL AS SPECIFIED UNDER THE SEQUENCE OF OPERATIONS. THE CONTROL SYSTEM SHALL BE A DDC TYPE CONTROL SYSTEM. THE CONTRACTOR SHALL PROVIDE ALL LABOR, MATERIALS, EQUIPMENT, POWER, WIRING, CONDUIT, CONTROLLERS, ACTUATORS, AND ASSOCIATED CONTROL COMPONENTS FOR A COMPLETE AND OPERATIONAL SYSTEM. ALL CONTROL WIRING ABOVE 24V SHALL BE ROUTED IN CONDUIT, CONTROL WIRING LESS THAN 24V SHALL BE PLENUM RATED. MOUNT THERMOSTATS AT 48" ABOVE FINISH FLOOR UNLESS OTHERWISE INDICATED. THE CONTRACTOR SHALL SUBMIT SYSTEM SHOP DRAWINGS INDICATING PRIMARY CONTROL PANEL LOCATIONS, PRODUCT DATA, VALVES AND DAMPER SCHEDULES, SEQUENCE OF OPERATION, AND WIRING DIAGRAMS.

TEST AND START-UP
TEST ALL PLUMBING PIPING SYSTEMS IN ACCORDANCE WITH THE UNIFORM PLUMBING CODE. TEST ALL GAS PIPING SYSTEMS IN ACCORDANCE WITH THE INTERNATIONAL FUEL GAS CODE. TEST ALL HYDRONIC PIPING SYSTEMS IN ACCORDANCE WITH THE INTERNATIONAL MECHANICAL CODE. FLUSH, DRAIN, AND STERILIZE DOMESTIC WATER PIPING SYSTEMS IN ACCORDANCE WITH THE UNIFORM PLUMBING CODE. FLUSH AND CLEAN HYDRONIC PIPING SYSTEMS IN ACCORDANCE WITH GLYCOL MANUFACTURERS REQUIREMENTS, WATER TREATMENT RECOMMENDATIONS, AND GOOD PRACTICE.

BALANCE
THE CONTRACTOR SHALL RETAIN THE SERVICES OF A PROFESSIONAL TEST AND BALANCE FIRM TO TEST AND BALANCE THE AIR, WATER, AND HYDRONIC SYSTEMS IN ACCORDANCE WITH DESIGN VALUES AND TO THE SATISFACTION OF THE OWNER. THE TEST AND BALANCE FIRM SHALL BE NEBB OR AABC CERTIFIED. AIR AND FLUID FLOWS ARE TO BE BALANCED TO WITHIN ±10% OF DESIGN VALUES. BALANCING PROCEDURES SHALL BE IN ACCORDANCE WITH NEBB OR AABC REQUIREMENTS. SUBMIT BALANCE REPORT FOR REVIEW.

SEQUENCE OF OPERATION

SYSTEM DESCRIPTION
THIS SEQUENCE OF OPERATION DEFINES THE MANNER AND METHOD BY WHICH CONTROLS FUNCTION. UNLESS OTHERWISE INDICATED, ALL CONTROL FUNCTIONS SHALL BE THROUGH THE DIRECT DIGITAL CONTROL SYSTEM (DDC) WITH APPROPRIATE SYSTEM GRAPHICS AND USER INTERFACE TO MONITOR AND CONTROL SYSTEMS, COORDINATE WITH BUILDING OWNER FOR DESIRED LOCATION OF DDC INTERFACE STATION WITHIN BUILDING. EQUIPMENT WITH INTEGRAL CONTROLS DO NOT NEED TO BE CONTROLLED THROUGH THE DDC CONTROLS SYSTEM BUT SHALL REQUIRE MONITORING BY DDC SYSTEM WHERE INDICATED. PROVIDE REMOTE ACCESS CAPABILITY INTO THE DDC SYSTEM TO CONTROL BOILERS AND VARIOUS HVAC SYSTEMS AS REQUESTED BY THE BUILDING OWNER, COORDINATE WITH BUILDING OWNER FOR REMOTE ACCESS REQUIREMENTS.

COORDINATE WITH BUILDING OWNER TO DEFINE OCCUPIED/UNOCCUPIED TIME MODE SETTINGS. PROVIDE QUANTITY OF TIME MODE SETTINGS AND MEANS TO ASSIGN INDIVIDUAL EQUIPMENT OR ZONES TO A RESPECTIVE TIME MODE SETTING AS REQUIRED TO ACCOMMODATE THE VARIOUS TYPES OF SPACES PRESENT IN THIS FACILITY.

UPON LOSS OF POWER, DDC EQUIPMENT SHALL AUTOMATICALLY RE-ENERGIZE.

HOT WATER GENERATORS (HWG-1 AND HWG-2), CIRCULATION PUMPS (CP-3 AND CP-4), AND TEMPERING VALVE (TV-1)

OPERATION MODE
1. HOT WATER GENERATORS (HWG-1 AND HWG-2) SHALL OPERATE CONTINUOUSLY.
2. FOR EACH HOT WATER GENERATOR, INTEGRAL AQUASTAT SHALL OPEN 2-WAY CONTROL VALVE AND TURN ON RESPECTIVE HOT WATER GENERATOR CIRCULATION PUMP (CP-3 OR CP-4) TO MAINTAIN AQUASTAT SETTING OF 140°F (ADJUSTABLE).
3. DOWNSTREAM TEMPERING VALVE SHALL BE MANUALLY SET TO 115°F (ADJUSTABLE).

SYSTEM INDICATION
1. SYSTEM GRAPHIC.
2. HOT WATER GENERATOR CIRCULATION PUMP ON/OFF STATUS - EACH PUMP.
3. HOT WATER GENERATOR CIRCULATION PUMP FAILURE ALARM - EACH PUMP.
4. HOT WATER GENERATOR CIRCULATION PUMP RUN TIME (HOURS) - EACH PUMP.
5. HOT WATER TEMPERATURE DOWNSTREAM OF TEMPERING VALVE.
6. HOT WATER HIGH TEMPERATURE ALARM DOWNSTREAM OF TEMPERING VALVE.
7. HOT WATER HIGH TEMPERATURE ALARM SETPOINT (125°F, ADJUSTABLE.).

AIR COMPRESSORS (AC-1 AND AC-2)

OPERATION MODE
1. INTEGRAL FACTORY CONTROLS SHALL CYCLE UNIT MOUNTED COMPRESSORS AS REQUIRED.
2. NO CONTROL OR MONITORING THROUGH DDC.

DOMESTIC HOT WATER CIRCULATION PUMP (HWCP-1)

OPERATION MODE
1. PUMP SHALL OPERATE DURING OCCUPIED TIME MODE AND PUMP SHALL BE OFF DURING UNOCCUPIED TIME MODE.

SYSTEM INDICATION
1. SYSTEM GRAPHIC.
2. HOT WATER CIRCULATION PUMP ON/OFF STATUS.
3. HOT WATER CIRCULATION PUMP FAILURE ALARM.
4. HOT WATER CIRCULATION PUMP RUN TIME (HOURS).

GLYCOL MAKE-UP TANK (GT-1)

OPERATION MODE
1. INTEGRAL CONTROLS SHALL CONTROL PUMP TO MAINTAIN SYSTEM PRESSURE SET POINT.
2. ON LOW LEVEL DETECTION, FACTORY CONTROL SHALL SHUT OFF PUMP AND ACTIVATE PACKAGED AUDIBLE AND VISUAL ALARM.
3. NO CONTROL THROUGH DDC. PROVIDE WITH REMOTE MONITORING DRY CONTACTS.
4. MONITORING AS REQUIRED BY SYSTEM INDICATION REQUIREMENTS.

SYSTEM INDICATION
1. SYSTEM GRAPHIC.
2. HYDRONIC SYSTEM PRESSURE.
3. HYDRONIC SYSTEM LOW PRESSURE ALARM.
4. HYDRONIC SYSTEM LOW PRESSURE ALARM SETPOINT (5 PSIG, ADJUSTABLE).
5. GLYCOL TANK LOW LEVEL ALARM.

BUILDING HEAT PUMPS (CP-1A/B)

OPERATION MODE
1. PUMPS SHALL BE ENABLED WHEN OUTSIDE AIR TEMPERATURE IS LESS THAN 65°F (ADJUSTABLE).
2. PUMPS SHALL BE DISABLED WHEN THE OUTSIDE AIR TEMPERATURE IS 65°F (ADJUSTABLE) OR MORE.

PUMP SEQUENCING
1. PUMPS SHALL OPERATE IN A PRIMARY-SECONDARY ARRANGEMENT.
2. PUMP DESIGNATED AS PRIMARY SHALL ENERGIZE FIRST.
3. IF PRIMARY PUMP FAILS TO OPERATE:
   3.1. SIGNAL ALARM.
   3.2. SWITCH PUMP PRIMARY-SECONDARY ARRANGEMENT.
   3.3. ENERGIZE NEWLY DESIGNATED PRIMARY PUMP.
4. PRIMARY PUMP DESIGNATION SHALL BE SWITCHED MONTHLY (ADJUSTABLE).

PUMP OPERATION
1. MODULATE PRIMARY PUMP VFD TO MAINTAIN A SYSTEM DIFFERENTIAL PRESSURE SETPOINT (ADJUSTABLE). DIFFERENTIAL PRESSURE SETPOINT SHALL BE DETERMINED DURING BALANCING.
2. THE DIFFERENTIAL PRESSURE SENSORS SHALL BE LOCATED AS SHOWN ON PLANS.

SYSTEM INDICATION
1. SYSTEM GRAPHIC.
2. PUMP ENABLE/DISABLE STATUS - EACH PUMP.
3. PRIMARY/SECONDARY PUMP INDICATOR.
4. PRIMARY/SECONDARY PUMP ALTERNATING SCHEDULE ADJUSTMENT.
5. PUMP RUN TIME (HOURS) - EACH PUMP.
6. PUMP ON/OFF INDICATION - EACH PUMP.
7. PUMP ON/OFF/AUTO SWITCH - EACH PUMP.
8. PUMP NO-FLOW ALARM - EACH PUMP.
9. DIFFERENTIAL PRESSURE & SETPOINT (ADJUSTABLE) - EACH SENSOR.
10. LOW FLOW PRESSURE ALARM.
11. VFD OUTPUT (PERCENTAGE) - EACH PUMP.
12. VFD OPERATING STATUS - EACH PUMP.
13. VFD FAULT STATUS - EACH PUMP.
14. PUMP ENABLE/DISABLE OUTSIDE AIR TEMPERATURE ADJUSTMENT.

STATE OF ALASKA 49TH
Timothy C Hickman
ME-14669
05/09/18
REGISTERED PROFESSIONAL ENGINEER

Burkhart Croft
ARCHITECTS LLC
880 N Street Suite 302 | Anchorage Alaska 99501
T: 907.929.9334 | www.burkhart-croft.com

HZA
ENGINEERING SOLUTIONS
HZA Engineering, LLC
113 W. Northern Lights Blvd., Suite 240
Anchorage, Alaska 99503
Tel. (907) 562-1012 Fax (907) 562-1013
AK Corporation # AECL681

MATANUSKA-SUSITNA BOROUGH
MSB FIRE STATION 6-2
WASILLA, ALASKA

DATE:	5/9/2018
DRAWN:	TCH
CHECKED:	TCH
PROJECT:	2017.064.0
DRAWING TITLE:	SPECIFICATIONS & SEQUENCE OF OPERATIONS
REVISIONS:	
SHEET NO:	M0.5

SEQUENCE OF OPERATION - CONTINUED

SNOWMELT CIRCULATION PUMP (CP–2)

OPERATION MODE

1. SNOWMELT CIRCULATION PUMP SHALL BE CONTROLLED BY THE SNOWMELT SYSTEM CONTROLLER, SEE SNOWMELT SYSTEM SEQUENCE OF OPERATION.

SYSTEM INDICATION

1. SYSTEM GRAPHIC.
2. PUMP ON/OFF INDICATION.
3. PUMP FAILURE ALARM.
4. PUMP RUN TIME (HOURS).

PUMP ROOM SUMP PUMP (SP–1)

OPERATION MODE

1. SUMP PUMP AND FLOATS SHALL BE CONTROLLED BY PUMP INTERNAL CONTROLLER.
2. NO CONTROL OR MONITORING THROUGH DDC.

FUEL TANKS (FT–1 AND FT–2)

OPERATION MODE

1. FUEL TANKS SHALL BE CONTROLLED BY INTEGRAL FACTORY MOUNTED DEVICES.
2. NO CONTROL OR MONITORING THROUGH DDC.
3. NO DIGITAL FUEL TRACKING SYSTEMS REQUIRED.

SNOWMELT SYSTEM

OPERATION MODE

1. SNOWMELT SYSTEM SHALL BE CONTROLLED BY A PACKAGED TEKMAR SNOWMELT CONTROLLER TO PROVIDE SLAB IDLING, SLAB MELTING, MANUAL OVERRIDE, COLD WEATHER CUT OUT, WARM WEATHER SHUT DOWN, AND ANY ADDITIONAL FUNCTIONS PROVIDED BY THE SNOWMELT CONTROLLER.
2. SNOWMELT SYSTEM SHALL INCLUDE A SLAB SNOW/ICE SENSOR AND ANY ADDITIONAL CONTROL COMPONENTS AS REQUIRED FOR SYSTEM ACTIVATION.
3. UPON SYSTEM ACTIVATION, SNOWMELT SYSTEM CONTROLLER SHALL SEND A CALL FOR HEAT TO THE SNOWMELT BOILER (B–3) AND SHALL TURN ON SNOWMELT CIRCULATION PUMP (CP–2).
4. REFER TO SNOWMELT SYSTEM CONTROLLER MANUFACTURER FOR A DETAILED SEQUENCE OF OPERATION OF THE SNOWMELT SYSTEM.
5. PROVIDE SNOWMELT OVERRIDE ACTIVATION SWITCHES WHERE SHOWN ON PLANS.

SYSTEM INDICATION

1. SYSTEM GRAPHIC.
2. SNOWMELT SYSTEM INDICATION (MELTING, IDLE, OR OFF).
3. OUTSIDE AIR TEMPERATURE.
4. SLAB TEMPERATURE.
5. SNOWMELT CIRCULATION PUMP ON/OFF INDICATION.
6. SNOWMELT SYSTEM HOT GLYCOL SUPPLY TEMPERATURE.
7. SNOWMELT SYSTEM HOT GLYCOL RETURN TEMPERATURE.

HYDRONIC HEATING BOILERS (B–1 AND B–2) AND BOILER CIRCULATION PUMPS (BC–1 AND BC–2)

OPERATION MODE

1. BOILERS SHALL BE ENABLED WHEN OUTSIDE AIR TEMPERATURE IS LESS THAN 65°F (ADJUSTABLE) AND DISABLED WHEN OUTSIDE AIR TEMPERATURE IS 65°F (ADJUSTABLE) OR MORE.
2. INTEGRAL BOILER CONTROLS SHALL MODULATE BURNERS AND OPERATE BOILER CIRCULATION PUMPS (BC–1 AND BC–2) TO MAINTAIN SUPPLY HEADER TEMPERATURE.
3. INTERNAL BOILER CONTROLS SHALL ROTATE BOILERS FOR EQUAL RUN TIMES AND OPERATE BOILERS IN A LEAD–LAG ARRANGEMENT.
4. SUPPLY HEADER TEMPERATURE SHALL RESET BETWEEN 140°F AND 90°F (ADJUSTABLE) BASED ON OUTSIDE AIR TEMPERATURES BETWEEN 35°F AND 65°F (ADJUSTABLE) RESPECTIVELY.
5. ON CALL FOR HEAT FROM EITHER HOT WATER GENERATOR, INTERNAL BOILER CONTROLS SHALL OPERATE BOILERS TO MAINTAIN A BOILER SUPPLY TEMPERATURE OF 180°F (ADJUSTABLE). IF BOILERS ARE DISABLED UPON CALL FOR HEAT FROM EITHER HOT WATER GENERATOR, BOILERS SHALL BE ENABLED AND INTERNAL CONTROLS SHALL OPERATE BOILERS TO MAINTAIN A BOILER SUPPLY TEMPERATURE OF 180°F (ADJUSTABLE) AND BOILERS SHALL REMAIN ENABLED UNTIL CALL FOR HEAT FROM EITHER HOT WATER GENERATOR HAS ENDED. DURING A CALL FOR HEAT FROM EITHER HOT WATER GENERATOR, BUILDING HEAT PUMPS CP–1A/B SHALL BE DISABLED.
6. PROVIDE ALL TRIM AS REQUIRED PER CHAPTER 10 OF THE INTERNATIONAL MECHANICAL CODE AND AS REQUIRED PER ASME CSD–1.
7. ALL BOILER TROUBLE AND FAILURE ALARMS SHALL INITIATE AN ALARM BY THE DDC SYSTEM.
8. DDC SYSTEM SHALL MONITOR SYSTEM PRESSURE AT THE BUILDING HEAT HYDRONIC EXPANSION TANK, ET–1, AND INITIATE ALARM UPON LOW SYSTEM PRESSURE OF 5 PSIG (ADJUSTABLE).

SYSTEM INDICATION

1. SYSTEM GRAPHIC.
2. OUTSIDE AIR TEMPERATURE.
3. SUPPLY HEADER TEMPERATURE.
4. SUPPLY HEADER TEMPERATURE SETPOINT.
5. RETURN HEADER TEMPERATURE.
6. BOILER CIRCULATION PUMP ON/OFF STATUS – EACH PUMP.
7. BOILER CIRCULATION PUMP FAILURE ALARM – EACH PUMP.
8. BOILER CIRCULATION PUMP RUN TIME (HOURS) – EACH PUMP.
9. BOILER ON/OFF STATUS – EACH BOILER.
10. BOILER ENABLE/DISABLE STATUS – EACH BOILER.
11. BOILER ENABLE/DISABLE TEMPERATURE SETPOINT (65°F, ADJUSTABLE).
12. BOILER GENERAL ALARM – EACH BOILER.
13. HYDRONIC SUPPLY/RETURN TEMPERATURE AT BOILER – EACH BOILER.
14. HYDRONIC SYSTEM PRESSURE.
15. HYDRONIC SYSTEM LOW PRESSURE ALARM.
16. HYDRONIC SYSTEM LOW PRESSURE ALARM SETPOINT (5 PSIG, ADJUSTABLE).

SNOWMELT BOILER (B–3) AND BOILER CIRCULATION PUMP (BC–3)

OPERATION MODE

1. BOILER SHALL BE ENABLED UPON CALL FOR HEAT FROM THE SNOWMELT SYSTEM CONTROLLER.
2. INTEGRAL BOILER CONTROLS SHALL MODULATE BURNER AND OPERATE BOILER CIRCULATION PUMP (BC–3) TO MAINTAIN SUPPLY HEADER TEMPERATURE.
3. SUPPLY HEADER TEMPERATURE SHALL BE SET AT 140°F (ADJUSTABLE).
4. PROVIDE ALL TRIM AS REQUIRED PER CHAPTER 10 OF THE INTERNATIONAL MECHANICAL CODE AND AS REQUIRED PER ASME CSD–1.
5. ALL BOILER TROUBLE AND FAILURE ALARMS SHALL INITIATE AN ALARM BY THE DDC SYSTEM.

SNOWMELT BOILER (B–3) AND BOILER CIRCULATION PUMP (BC–3) – CONTINUED

SYSTEM INDICATION

1. SYSTEM GRAPHIC.
2. SNOWMELT SYSTEM CALL FOR HEAT STATUS.
3. SUPPLY HEADER TEMPERATURE.
4. SUPPLY HEADER TEMPERATURE SETPOINT.
5. RETURN HEADER TEMPERATURE.
6. BOILER CIRCULATION PUMP ON/OFF STATUS.
7. BOILER CIRCULATION PUMP FAILURE ALARM.
8. BOILER CIRCULATION PUMP RUN TIME (HOURS).
9. BOILER ON/OFF STATUS.
10. BOILER ENABLE/DISABLE STATUS.
11. BOILER GENERAL ALARM.
12. HYDRONIC SUPPLY/RETURN TEMPERATURE AT BOILER.

UNIT HEATERS (UH–1 THRU UH–4)

OPERATION MODE

1. LOW VOLTAGE SPACE THERMOSTAT SHALL CYCLE FAN TO MAINTAIN THERMOSTAT SETPOINT.
2. INITIALLY SET OCCUPIED THERMOSTAT SETPOINT TO 70°F (ADJUSTABLE).
3. UNIT HEATER COIL SHALL RUN WILD.
4. NO TEMPERATURE SETBACK REQUIRED FOR UH–1 (MECHANICAL ROOM).

SYSTEM INDICATION

1. SYSTEM GRAPHIC.
2. OCCUPIED SPACE TEMPERATURE SETPOINT (70°F, ADJUSTABLE).
3. UNOCCUPIED TEMPERATURE SETBACK (15°F BELOW OCCUPIED SETPOINT, ADJUSTABLE).
4. SPACE TEMPERATURE.
5. LOW/HIGH SPACE TEMPERATURE ALARMS.
6. LOW/HIGH SPACE TEMPERATURE ALARM SETPOINTS (45°F/95°F, ADJUSTABLE).

CABINET UNIT HEATERS (CUH–1 THRU CUH–3)

OPERATION MODE

1. ON CALL FOR HEAT FROM SPACE TEMPERATURE THERMOSTAT OR SENSOR, FAN SHALL OPERATE AND CONTROL VALVE SHALL OPEN TO MAINTAIN SPACE TEMPERATURE SETPOINT.
2. PROVIDE DDC PROGRAMMABLE TEMPERATURE SENSOR OR THERMOSTAT WITH LOCKING COVER IN PUBLIC AREAS TO ALLEVIATE PUBLIC TAMPERING OF SPACE TEMPERATURE SETPOINT.
3. INITIALLY SET CUH–1/2 TO OPERATE CONTINUOUSLY AT OCCUPIED TEMPERATURE SETPOINT.

SYSTEM INDICATION

1. SYSTEM GRAPHIC.
2. OCCUPIED SPACE TEMPERATURE SETPOINT (70°F, ADJUSTABLE).
3. UNOCCUPIED TEMPERATURE SETBACK (15°F BELOW OCCUPIED SETPOINT, ADJUSTABLE).
4. SPACE TEMPERATURE.
5. LOW/HIGH SPACE TEMPERATURE ALARMS.
6. LOW/HIGH SPACE TEMPERATURE ALARM SETPOINTS (45°F/95°F, ADJUSTABLE).

APPARATUS AND GENERAL USE BAY HEATING, GAS FIRED UNIT HEATERS (GUH–1 THROUGH GUH–8) AND RADIANT FLOOR MANIFOLDS (R–1 THRU R–8)

OPERATION MODE

1. RADIANT MANIFOLDS SHALL ACT AS FIRST STAGE OF HEAT WITH GAS FIRED UNIT HEATERS AS SECOND STAGE OF HEAT.
2. UPON CALL FOR HEAT FROM BAY TEMPERATURE SENSORS, EACH BAYS RADIANT MANIFOLD'S MODULATING CONTROL VALVE SHALL MODULATE TO MAINTAIN SPACE TEMPERATURE SETPOINT.
3. GAS FIRED UNIT HEATER SETPOINT SHALL BE 10°F (ADJUSTABLE) BELOW DDC ADJUSTABLE SPACE TEMPERATURE SETPOINT, BUT NO LOWER THAN 45°F (ADJUSTABLE).
4. UPON CALL FOR HEAT FROM GAS FIRED UNIT HEATERS, CYCLE UNIT'S FAN MOTOR AND GAS BURNER TO MAINTAIN TEMPERATURE SETPOINT.
5. EACH BAY TO BE PROVIDED WITH FOUR EACH TEMPERATURE SENSORS AS INDICATED ON PLANS. SPACE TEMPERATURE SETPOINTS SHALL BE ADJUSTABLE THROUGH DDC SYSTEM. TEMPERATURE SETPOINT FOR TERMINAL UNITS TO MAINTAIN SHALL BE AVERAGE TEMPERATURE OF THE FOUR TEMPERATURE SENSORS.

SYSTEM INDICATION

1. SYSTEM GRAPHIC.
2. OCCUPIED SPACE TEMPERATURE SETPOINT (70°F, ADJUSTABLE).
3. UNOCCUPIED TEMPERATURE SETBACK (15°F BELOW OCCUPIED SETPOINT, ADJUSTABLE).
4. SECOND STAGE TEMPERATURE SETBACK (10°F BELOW OCCUPIED SETPOINT, ADJUSTABLE).
5. SPACE TEMPERATURE – EACH SENSOR.
6. AVERAGE SPACE TEMPERATURE.
7. LOW/HIGH SPACE TEMPERATURE ALARMS.
8. LOW/HIGH SPACE TEMPERATURE ALARM SETPOINTS (45°F/95°F, ADJUSTABLE).

RADIANT FLOOR MANIFOLDS (R–9 AND R–10)

OPERATION MODE

1. UPON CALL FOR HEAT FROM USER ADJUSTABLE THERMOSTAT, RADIANT MANIFOLD'S MODULATING CONTROL VALVE SHALL MODULATE TO MAINTAIN SPACE TEMPERATURE SETPOINT.

SYSTEM INDICATION

1. SYSTEM GRAPHIC.
2. OCCUPIED SPACE TEMPERATURE SETPOINT (70°F, ADJUSTABLE).
3. UNOCCUPIED TEMPERATURE SETBACK (15°F BELOW OCCUPIED SETPOINT, ADJUSTABLE).
4. SPACE TEMPERATURE.
5. LOW/HIGH SPACE TEMPERATURE ALARMS.
6. LOW/HIGH SPACE TEMPERATURE ALARM SETPOINTS (45°F/95°F, ADJUSTABLE).

BASEBOARD (BB–1)

OPERATION MODE

1. UPON CALL FOR HEAT FROM USER ADJUSTABLE THERMOSTAT, BASEBOARD'S MODULATING CONTROL VALVE SHALL MODULATE TO MAINTAIN SPACE TEMPERATURE SETPOINT.

SYSTEM INDICATION

1. SYSTEM GRAPHIC.
2. OCCUPIED SPACE TEMPERATURE SETPOINT (70°F, ADJUSTABLE).
3. UNOCCUPIED TEMPERATURE SETBACK (15°F BELOW OCCUPIED SETPOINT, ADJUSTABLE).
4. SPACE TEMPERATURE.
5. LOW/HIGH SPACE TEMPERATURE ALARMS.
6. LOW/HIGH SPACE TEMPERATURE ALARM SETPOINTS (45°F/95°F, ADJUSTABLE).

VARIABLE AIR VOLUME TERMINAL UNITS (VAV–1 THRU VAV–24)

OPERATION MODE

1. MORNING WARM–UP OPERATION:
   - 1.1. DAMPER SHALL MODULATE BETWEEN MAX. AND MIN. SCHEDULED AIRFLOWS TO MAINTAIN SPACE THERMOSTAT SETPOINT.
   - 1.2. THE HEAT COIL CONTROL VALVE SHALL MODULATE AS REQUIRED TO MAINTAIN SPACE THERMOSTAT SETPOINT.
2. OCCUPIED MODE:
   - 2.1. COOLING MODE: DAMPER SHALL MODULATE BETWEEN MAX. AND MIN. SCHEDULED AIRFLOW TO MAINTAIN SPACE THERMOSTAT SETPOINT.
   - 2.2. HEATING MODE: DAMPER SHALL MAINTAIN MIN. POSITION UNDER HEATING MODE FOR HEATING COIL AIRFLOW. THE HEAT COIL CONTROL VALVE SHALL MODULATE TO MAINTAIN SPACE THERMOSTAT SETPOINT.
3. UNOCCUPIED MODE:
   - 3.1. DAMPER SHALL CLOSE TO MIN. AIRFLOW POSITION AND HEATING COIL CONTROL VALVE SHALL BE CLOSED TO FLOW THROUGH THE COIL.
   - 3.2. ON CALL FOR HEAT FROM SPACE THERMOSTAT, DAMPER SHALL MAINTAIN MIN. POSITION UNDER HEATING MODE FOR HEATING COIL AIRFLOW AND THE HEATING COIL CONTROL VALVE SHALL MODULATE TO MAINTAIN SPACE THERMOSTAT SETPOINT AT 15°F (ADJUSTABLE) LOWER THAN OCCUPIED MODE SPACE SETPOINT.

SYSTEM INDICATION

1. SYSTEM GRAPHIC.
2. OCCUPIED/UNOCCUPIED STATUS.
3. DAMPER POSITION.
4. HEATING VALVE POSITION.
5. SUPPLY AIR VOLUME (CFM).
6. SPACE TEMPERATURE SETPOINT.
7. SPACE TEMPERATURE.
8. UNOCCUPIED SPACE TEMPERATURE SETBACK (15°F BELOW OCCUPIED SETPOINT, ADJUSTABLE).
9. LOW/HIGH SPACE TEMPERATURE ALARMS.
10. LOW/HIGH SPACE TEMPERATURE ALARM SETPOINTS (45°F/95°F, ADJUSTABLE).

EXHAUST FAN (EF–1, EF–2, EF–7, AND EF–11) – LOCKER/RESTROOM/SHOWER/TOILET EXHAUST

OPERATION MODE

1. FAN SHALL BE ENABLED CONTINUOUSLY.
2. OCCUPANT SENSOR SHALL TURN ON FAN WHEN MOTION IS DETECTED, COORDINATE CONNECTION TO OCCUPANT SENSOR WITH ELECTRICAL.
3. PROVIDE A MINIMUM 15 MINUTE DELAY OFF TIMER FOR THE FAN.
4. NO CONTROL OR MONITORING THROUGH DDC.

EXHAUST FAN (EF–3, EF–4, EF–5, EF–8, EF–10, AND EF–12) – DECON/LAUNDRY/JANITOR/GEAR/HOSE EXHAUST

OPERATION MODE

1. ON–OFF CONTROL VIA LOCAL WALL SWITCH.
2. NO CONTROL OR MONITORING THROUGH DDC.

EXHAUST FAN (EF–6 AND EF–13) – PUMP ROOM AND COMPRESSOR ROOM CONTINUOUS EXHAUST

OPERATION MODE

1. FAN SHALL RUN CONTINUOUSLY.
2. PROVIDE ON–OFF CONTROL SWITCH FOR MAINTENANCE. LOCATE SWITCH DIRECT MOUNT TO FAN.

SYSTEM INDICATION

1. SYSTEM GRAPHIC.
2. FAN ON/OFF INDICATION.
3. FAN FAILURE ALARM.

EXHAUST FAN (EF–9) – TEACHING LAB EXHAUST

OPERATION MODE

1. HUMIDISTAT SHALL OPERATE FAN WHEN HUMIDITY EXCEEDS SETPOINT (ADJUSTABLE).
2. PROVIDE MANUAL ON/OFF SWITCH IN ADDITION TO HUMIDISTAT FOR USER MANUAL OPERATION.

SYSTEM INDICATION

1. SYSTEM GRAPHIC.
2. FAN ON/OFF INDICATION.
3. FAN FAILURE ALARM.

EXHAUST FAN (EF–14 AND EF–15) – BAY CONTINUOUS EXHAUST

OPERATION MODE

1. FAN SHALL RUN CONTINUOUSLY.
2. PROVIDE ON–OFF CONTROL SWITCH FOR MAINTENANCE. LOCATE SWITCH EITHER DIRECT MOUNT TO FAN OR WALL MOUNTED WITHIN THE VICINITY OF THE FAN.

SYSTEM INDICATION

1. SYSTEM GRAPHIC.
2. FAN ON/OFF INDICATION.
3. FAN FAILURE ALARM.

DESTRATIFICATION CEILING FANS (CF–1)

OPERATION MODE

1. UPON ACTIVATION FROM THE DIAL ON–OFF WALL SWITCH, VARIABLE SPEED FAN MOTOR SHALL OPERATE AT THE DIAL SPEED SELECTED.
2. REFER TO PLANS FOR QUANTITY AND LOCATION OF DIAL ON–OFF WALL SWITCHES.
3. NO CONTROL OR MONITORING THROUGH DDC.

RANGE HOOD (RH–1)

OPERATION MODE

1. FAN AND LIGHT SHALL BE CONTROLLED FROM HOOD MOUNTED SWITCHES.
2. INTEGRAL FIRE SUPPRESSION SYSTEM SHALL BE ACTIVATED FROM INTERNAL TEMPERATURE SENSORS OR FACTORY PROVIDED MANUAL PULL STATION.
3. GAS SOLENOID VALVE, PROVIDED BY HOOD MANUFACTURER, SHALL BE CONTROLLED VIA INTEGRAL FACTORY CONTROLS WITHIN HOOD.
4. NO CONTROL OR MONITORING THROUGH DDC.

COMBINATION FIRE/SMOKE DAMPERS

OPERATION MODE

1. COMBINATION FIRE SMOKE DAMPERS SHALL BE NORMALLY CLOSED AND POWERED OPEN.
2. UPON SMOKE DETECTION AT LOCAL DUCT SMOKE DETECTOR LOCATED IN ACCORDANCE WITH IMC SECTION 607, DAMPER SHALL CLOSE.
3. DAMPER SHALL HAVE A TEMPERATURE SENSITIVE FUSIBLE LINK THAT WILL ALLOW THE DAMPER TO CLOSE WHEN LINK FAILS.

Burkhart Croft
ARCHITECTS LLC
880 N Street Suite 302 | Anchorage Alaska 99501
T: 907.929.9334 | www.burkhart-croft.com

HZA
ENGINEERING SOLUTIONS
HZA Engineering, LLC
113 W. Northern Lights Blvd., Suite 240
Anchorage, Alaska 99503
Tel. (907) 562-1012 Fax (907) 562-1013
AK Corporation # AECL881

MATANUSKA-SUSITNA BOROUGH

MSB FIRE STATION 6-2

WASILLA, ALASKA

DATE:	5/9/2018
DRAWN:	TCH
CHECKED:	TCH
PROJECT:	2017.064.0
DRAWING TITLE:	SEQUENCE OF OPERATIONS
REVISIONS:	
SHEET NO:	**M0.6**

SEQUENCE OF OPERATION - CONTINUED

EXHAUST FANS (EF-16 THRU EF-19) – BAY CO/NO2 EXHAUST

CARBON MONOXIDE DETECTION LEVELS

1. UPON CARBON MONOXIDE DETECTION OF 10 PPM (ADJUSTABLE) OR GREATER FROM ANY CARBON MONOXIDE DETECTOR WITHIN A GIVEN BAY, AN AUDIBLE ALARM SHALL SOUND WITHIN THE RESPECTIVE BAY EXCEEDING 10 PPM (ADJUSTABLE). ALARM SHALL SOUND UNTIL CARBON MONOXIDE DETECTION DROPS BELOW 10 PPM (ADJUSTABLE).
2. UPON CARBON MONOXIDE DETECTION OF 25 PPM (ADJUSTABLE) OR GREATER FROM ANY CARBON MONOXIDE DETECTOR WITHIN 114 APPARATUS BAY, EXHAUST FANS EF-16 AND EF-17 SHALL OPERATE.
3. UPON CARBON MONOXIDE DETECTION OF 25 PPM (ADJUSTABLE) OR GREATER FROM ANY CARBON MONOXIDE DETECTOR WITHIN 161/162 GENERAL USE BAY, EXHAUST FANS EF-18 AND EF-19 SHALL OPERATE.

NITRGOEN DIOXIDE DETECTION LEVELS

1. UPON NITROGEN DIOXIDE DETECTION OF 1 PPM (ADJUSTABLE) OR GREATER FROM ANY NITROGEN DIOXIDE DETECTOR WITHIN A GIVEN BAY, AN AUDIBLE ALARM SHALL SOUND WITHIN THE RESPECTIVE BAY EXCEEDING 1 PPM (ADJUSTABLE). ALARM SHALL SOUND UNTIL NITROGEN DIOXIDE DETECTION DROPS BELOW 1 PPM (ADJUSTABLE).
2. UPON NITROGEN DIOXIDE DETECTION GREATER THAN 1 PPM (ADJUSTABLE) FROM ANY NITROGEN DIOXIDE DETECTOR WITHIN 114 APPARATUS BAY, EXHAUST FANS EF-16 AND EF-17 SHALL OPERATE.
3. UPON NITROGEN DIOXIDE DETECTION GREATER THAN 1 PPM (ADJUSTABLE) FROM ANY NITROGEN DIOXIDE DETECTOR WITHIN 161/162 GENERAL USE BAY, EXHAUST FANS EF-18 AND EF-19 SHALL OPERATE.

OPERATION MODE

1. UPON CARBON MONOXIDE DETECTION BELOW 25 PPM (ADJUSTABLE) OR NITROGEN DIOXIDE DETECTION BELOW 1 PPM (ADJUSTABLE):
   - 1.1. EXHAUST FANS EF-16 THRU EF-19 SHALL BE OFF AND ASSOCIATED CONTROL DAMPERS SHALL BE SHUT.
   - 1.2. CONTROL DAMPERS AT LOUVERS L-1 THRU L-4 SHALL BE CLOSED.
2. UPON CARBON MONOXIDE DETECTION ABOVE 25 PPM (ADJUSTABLE) OR NITROGEN DIOXIDE DETECTION ABOVE 1 PPM (ADJUSTABLE):
   - 2.1. EXHAUST FANS EF-16 THRU EF-19 SHALL OPERATE AND ASSOCIATED CONTROL DAMPERS SHALL OPEN.
   - 2.2. CONTROL DAMPERS AT LOUVERS L-1 THRU L-4 SHALL BE OPEN.
   - 2.3. EXHAUST FANS EF-16 THRU EF-19 SHALL CONTINUE TO OPERATE FOR 15 MINUTES (ADJUSTABLE) AFTER CARBON MONOXIDE DETECTION LEVELS DROP BELOW 10 PPM (ADJUSTABLE) AND AFTER NITROGEN DIOXIDE IS NO LONGER DETECTABLE.

MANUAL MODE

1. PROVIDE EACH EXHAUST FAN WITH A LOCAL ON-OFF WALL SWITCH LOCATED WITHIN THE VICINITY OF THE RESPECTIVE EXHAUST FAN IT SERVES WITHIN THE RESPECTIVE BAY. IF A FAN IS MANUALLY TURNED ON, ITS ASSOCIATED CONTROL DAMPER SHALL OPEN WHEN FAN IS ON.
2. ON-OFF WALL SWITCH SHALL NOT BE ABLE TO OVERRIDE FAN OPERATION IF FAN IS OPERATING ON CARBON MONOXIDE OR NITROGEN DIOXIDE DETECTION.
3. OPEN ONE CONTROL DAMPER AT RESPECTIVE BAY LOUVERS WHENEVER ONE FAN IS OPERATING. OPEN BOTH CONTROL DAMPERS IF BOTH FANS ARE OPERATING.

SYSTEM INDICATION

1. SYSTEM GRAPHIC.
2. SYSTEM ON/OFF INDICATION.
3. CO & NO2 LEVEL – EACH DETECTOR.
4. AUDIBLE ALARM SETPOINT (10 PPM CO, 1 PPM NO2, ADJUSTABLE).
5. FAN OPERATION SETPOINT (25 PPM CO, 1 PPM NO2, ADJUSTABLE).
6. FAN RUNTIME AFTER PURGE SETPOINT (15 MINUTES, ADJUSTABLE).
7. FAN ON/OFF STATUS – EACH FAN.
8. FAN FAILURE ALARM – EACH FAN.
9. DAMPER POSITION – EACH DAMPER.

VENTILATION FAN (VF-1) – MECHANICAL ROOM COOLING

OPERATION MODE

1. UPON CALL FOR COOLING FROM REVERSE ACTING THERMOSTAT, INITIALLY SET AT 75°F (ADJUSTABLE), FAN SHALL OPERATE.
2. DURING FAN OPERATION, OUTSIDE AIR AND RETURN AIR DAMPERS ASSOCIATED WITH THE VENT FAN ASSEMBLY SHALL MODULATE TO MAINTAIN 55°F (ADJUSTABLE) SUPPLY AIR TEMPERATURE.
3. DURING FAN OPERATION, RELIEF AIR CONTROL DAMPER SHALL MODULATE IN SEQUENCE WITH OUTSIDE AIR DAMPER.
4. UPON REVERSE ACTING THERMOSTAT SATISFACTION (SPACE TEMPERATURE < 75°F), FAN SHALL BE OFF, OUTSIDE AIR DAMPER SHALL CLOSE, RELIEF AIR DAMPER SHALL CLOSE, AND RETURN AIR DAMPER SHALL OPEN.

SYSTEM INDICATION

1. SYSTEM GRAPHIC.
2. FAN ON/OFF STATUS.
3. FAN FAILURE ALARM.
4. SPACE TEMPERATURE.
5. SPACE COOLING TEMPERATURE SETPOINT (75°F, ADJUSTABLE).
6. SUPPLY AIR TEMPERATURE.
7. SUPPLY AIR TEMPERATURE SETPOINT (55°F, ADJUSTABLE).
8. LOW/HIGH SPACE TEMPERATURE ALARMS.
9. LOW/HIGH SPACE TEMPERATURE ALARM SETPOINTS (45°F/95°F, ADJUSTABLE).
10. DAMPER POSITION – EACH DAMPER.

VENTILATION FAN (VF-2) – SCBA COMPRESSOR ROOM COOLING

OPERATION MODE

1. UPON CALL FOR COOLING FROM REVERSE ACTING THERMOSTAT, INITIALLY SET AT 75°F (ADJUSTABLE), FAN SHALL OPERATE.
2. DURING FAN OPERATION, OUTSIDE AIR AND RETURN AIR DAMPERS ASSOCIATED WITH THE VENT FAN ASSEMBLY SHALL MODULATE TO MAINTAIN 55°F (ADJUSTABLE) SUPPLY AIR TEMPERATURE.
3. DURING FAN OPERATION, RELIEF AIR CONTROL DAMPER SHALL OPEN.
4. UPON REVERSE ACTING THERMOSTAT SATISFACTION (SPACE TEMPERATURE < 75°F), FAN SHALL BE OFF, OUTSIDE AIR DAMPER SHALL CLOSE, RELIEF AIR DAMPER SHALL CLOSE, AND RETURN AIR DAMPER SHALL OPEN.

SYSTEM INDICATION

1. SYSTEM GRAPHIC.
2. FAN ON/OFF STATUS.
3. FAN FAILURE ALARM.
4. SPACE TEMPERATURE.
5. SPACE COOLING TEMPERATURE SETPOINT (75°F, ADJUSTABLE).
6. SUPPLY AIR TEMPERATURE.
7. SUPPLY AIR TEMPERATURE SETPOINT (55°F, ADJUSTABLE).
8. LOW/HIGH SPACE TEMPERATURE ALARMS.
9. LOW/HIGH SPACE TEMPERATURE ALARM SETPOINTS (45°F/95°F, ADJUSTABLE).

COMPUTER ROOM AIR CONDITIONING UNIT (CAC-1 AND CND-1)

OPERATION MODE

1. INTEGRAL PACKAGED CONTROLS SHALL OPERATE INDOOR UNIT, IN CONJUNCTION WITH CONDENSING UNIT, TO MAINTAIN SPACE TEMPERATURE SETPOINT VIA WIRED REMOTE CONTROLLER.
2. NO CONTROL THROUGH DDC. ROOM MONITORING AS REQUIRED BY SYSTEM INDICATION.

SYSTEM INDICATION

1. SYSTEM GRAPHIC.
2. SPACE TEMPERATURE.
3. LOW/HIGH SPACE TEMPERATURE ALARMS.
4. LOW/HIGH SPACE TEMPERATURE ALARM SETPOINTS (45°F/95°F, ADJUSTABLE).

RAINLEADER SCUPPER HEAT TRACE

OPERATION MODE

1. ON-OFF WALL SWITCH SHALL ACTIVATE HEAT TRACE IN RAINLEADER SCUPPERS. SWITCH QUANTITIES AND LOCATIONS AS SHOWN ON ELECTRICAL PLANS, COORDINATE WITH ELECTRICAL.
2. NO CONTROL OR MONITORING THROUGH DDC.

THERMOSTATS/SENSORS

THERMOSTATS AND SENSORS FOR HEATING ZONES SHALL BE LOW VOLTAGE WITH UNOCCUPIED SETBACK CAPABILITY. PROVIDE THERMOSTATS WITH HEATING ONLY OR HEATING AND COOLING AS REQUIRED. PROVIDE THERMOSTATS WITH USER ADJUSTABLE SETTINGS, SPACE TEMPERATURE DISPLAY, AND MODE OVERRIDE CAPABILITY. DDC SYSTEM SHALL BE ABLE TO MONITOR ALL THERMOSTATS AND SENSORS. PROVIDE INSULATING BASE FOR THERMOSTATS AND SENSORS MOUNTED ON EXTERIOR WALLS. SENSORS, WHEN PROVIDED, SHALL BE ADJUSTABLE ONLY THROUGH THE DDC SYSTEM.

ELECTRICAL ENERGY USAGE METER

THE DDC SYSTEM SHALL CONTINUALLY MONITOR/METER THE ENERGY USAGE IN THE MDP FOR THE MAT-SU BOROUGH AND FIRE DEPARTMENT TO ACCESS AND MONITOR. COORDINATE WITH MAT-SU BOROUGH FOR EXTENT OF MONITORING REQUIRED. PROVIDE A METER LOSS OF SIGNAL ALARM. COORDINATE WITH BUILDING OWNER TO DETERMINE WHAT UNIT OF MEASURE THE DDC SYSTEM SHOULD REPORT ENERGY USAGE IN (MBH, BTU, KW, CCF, ETC.).

ROOFTOP HVAC UNITS (RTU-1 AND RTU-2)

OPERATION

1. OCCUPIED, UNOCCUPIED, WARM-UP, AND OVERRIDE OPERATION MODES SHALL BE CONTROLLED BY THE DDC OPERATION MODE TIME SCHEDULES.
2. SET UNIT INITIALLY FOR 24 HOUR CONTINUOUS OPERATION. PROVIDE WARM-UP AND UNOCCUPIED MODES SHOULD BUILDING OWNER DECIDE TO NOT RUN UNIT CONTINUOUSLY.
3. PACKAGED FACTORY CONTROLS SHALL OPERATE RTU INTERNAL COMPONENTS WITH DDC SYSTEM PROVIDING SETPOINTS, OPERATION MODE, MONITORING, AND OTHER FUNCTIONS AS REQUIRED FOR PROPER UNIT OPERATION.
4. COORDINATE WITH RTU MANUFACTURER TO DETERMINE WHICH FUNCTIONS ARE INTEGRAL TO UNIT AND WHICH REQUIRE FIELD INSTALLED DEVICES.

OPERATION MODE

1. UNOCCUPIED MODE:
   - 1.1. UNIT SHALL BE OFF. OUTSIDE AND RELIEF AIR DAMPERS SHALL BE CLOSED. RETURN AIR DAMPER SHALL BE OPEN. COOLING OPERATION SHALL BE DISABLED.
   - 1.2. ON CALL FOR HEAT FROM ANY ZONE SERVED BY A VAV BOX, THE UNIT SHALL OPERATE SUPPLY FAN AND MODULATE INDIRECT GAS FIRED HEAT EXCHANGER AS REQUIRED TO MAINTAIN AN UNOCCUPIED SUPPLY AIR TEMPERATURE SETPOINT OF 55°F (ADJUSTABLE).
   - 1.3. OUTSIDE AND RELIEF AIR DAMPERS SHALL REMAIN CLOSED AND EXHAUST FAN SHALL BE OFF UNDER UNOCCUPIED MODE DURING A CALL FOR HEAT.
2. WARM-UP MODE:
   - 2.1. PRIOR TO THE START OF OCCUPIED MODE, UNIT SHALL START AND MODULATE AIRFLOW UP TO 100%. DDC SHALL DETERMINE OPTIMUM START TIME FOR MORNING WARM-UP.
   - 2.2. RETURN AIR DAMPER SHALL OPEN 100% WHILE OUTSIDE AND RELIEF AIR DAMPERS REMAIN CLOSED AND EXHAUST FAN REMAINS OFF.
   - 2.3. UNIT SHALL MODULATE INDIRECT GAS FIRED HEAT EXCHANGER AS REQUIRED TO MAINTAIN MORNING WARM-UP SUPPLY AIR TEMPERATURE OF 70°F (ADJUSTABLE).
   - 2.4. ONCE RETURN AIR TEMPERATURE RISES TO 65°F (ADJUSTABLE), THE UNIT SHALL SWITCH TO OCCUPIED MODE OF OPERATION.
3. OCCUPIED MODE:
   - 3.1. SUPPLY FAN SHALL RUN CONTINUOUSLY. FAN'S VFD SHALL MODULATE FAN TO MAINTAIN DUCT STATIC PRESSURE SETPOINT. LOCATE SENSOR AS SHOWN ON PLANS.
   - 3.2. OUTSIDE AIR DAMPER SHALL MODULATE TO PROVIDE MINIMUM OUTSIDE AIR REQUIRED. REFER TO EQUIPMENT SCHEDULES FOR OUTSIDE AIRFLOW REQUIREMENTS.
   - 3.3. OUTSIDE AIR AIRFLOW MAY REDUCE BELOW THAT INDICATED IN THE EQUIPMENT SCHEDULES AS LONG AS THE RETURN AIR CO2 SENSOR DOES NOT DETECT CO2 LEVELS ABOVE 700 PPM (ADJUSTABLE). SHOULD CO2 LEVELS RISE ABOVE 700 PPM (ADJUSTABLE), INCREASE OUTSIDE AIR AIRFLOW TO MINIMUM REQUIRED PER EQUIPMENT SCHEDULES.
   - 3.4. UNIT'S EXHAUST FAN AND RELIEF AIR DAMPERS SHALL MODULATE AS REQUIRED TO MAINTAIN A BUILDING STATIC PRESSURE SETPOINT OF +0.02" W.C. (ADJUSTABLE) RELATIVE TO THE OUTSIDE. LOCATE BUILDING STATIC PRESSURE SENSORS AS INDICATED ON PLANS. SPACES SERVED BY RTUs SHALL BE POSITIVE TO THE ADJACENT APPARATUS AND/OR GENERAL USE BAYS.
   - 3.5. UPON CALL FOR COOLING, UNIT SHALL MODULATE ECONOMIZER AND MECHANICAL COOLING AS REQUIRED TO MAINTAIN SUPPLY AIR TEMPERATURE OF 55°F (ADJUSTABLE).
   - 3.6. UPON CALL FOR HEATING, UNIT SHALL MODULATE INDIRECT GAS FIRED HEAT EXCHANGER AS REQUIRED TO MAINTAIN SUPPLY AIR TEMPERATURE OF 55°F (ADJUSTABLE).
   - 3.7. UPON SMOKE DETECTION BY THE RETURN AIR SMOKE DETECTOR (FIELD INSTALLED), UNIT SHALL SHUT OFF AND BOTH OUTSIDE AND RELIEF AIR DAMPERS SHALL SHUT.
   - 3.8. IF SUPPLY AIR TEMPERATURE DROPS BELOW 35°F (ADJUSTABLE), UNIT SHALL STOP, OUTSIDE AND RELIEF AIR DAMPERS SHALL SHUT, AND ALARM SIGNAL SHALL BE SENT TO THE DDC STSTEM.

SYSTEM INDICATION

1. SYSTEM GRAPHIC.
2. SYSTEM STATUS (UNOCCUPIED, WARM-UP, OCCUPIED, ALARM).
3. UNIT ON/OFF STATUS.
4. FAN FAILURE ALARM.
5. BURNER STATUS.
6. FLAME FAILURE ALARM.
7. FILTER STATUS.
8. BUILDING STATIC PRESSURE.
9. BUILDING STATIC PRESSURE SETPOINT (+0.02" W.C., ADJUSTABLE).
10. SUPPLY AIR TEMPERATURE.
11. SUPPLY AIR TEMPERATURE SETPOINT.
12. RETURN AIR TEMPERATURE.
13. OUTSIDE AIR DAMPER POSITION.
14. RELIEF AIR DAMPER POSITION.
15. OUTSIDE AIR TEMPERATURE.
16. FREEZE ALARM.
17. SMOKE ALARM.

STATE OF ALASKA
49TH
Timothy C Hickman
ME-14669
05/09/18
REGISTERED PROFESSIONAL ENGINEER

Burkhart Croft
ARCHITECTS LLC
880 N Street Suite 302 | Anchorage Alaska 99501
T: 907.929.9334 | www.burkhart-croft.com

HZA
ENGINEERING SOLUTIONS
HZA Engineering, LLC
113 W. Northern Lights Blvd., Suite 240
Anchorage, Alaska 99503
Tel. (907) 562-1012 Fax (907) 562-1013
AK Corporation # AECL881

MATANUSKA-SUSITNA BOROUGH

MSB FIRE STATION 6-2

WASILLA, ALASKA

DATE:	5/9/2018
DRAWN:	TCH
CHECKED:	TCH
PROJECT:	2017.064.0
DRAWING TITLE:	SEQUENCE OF OPERATIONS
REVISIONS:	
SHEET NO:	**M0.7**

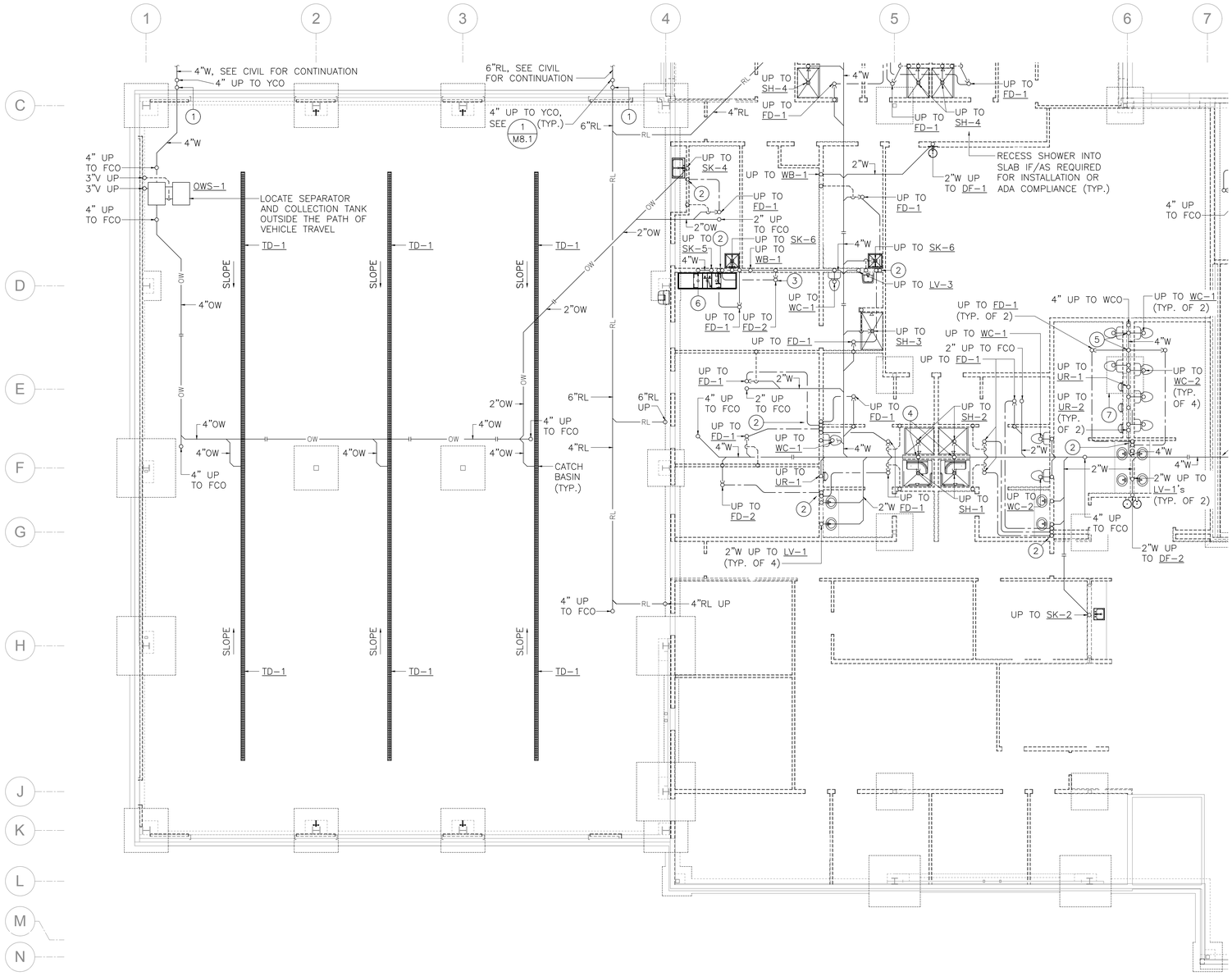

1 / M1.1 UNDERFLOOR PLUMBING PLAN - AREA A

SCALE: 1/8" = 1'-0"

SHEET NOTES

1. BRANCH PIPING TO INDIVIDUAL PLUMBING FIXTURES SHALL EQUAL THE SIZE REQUIRED BY THE PLUMBING FIXTURES SCHEDULE UNLESS OTHERWISE INDICATED.
2. PROVIDE CLEANOUTS ON ALL INDIVIDUAL SINK, LAVATORY, AND DRINKING FOUNTAIN RISERS.
3. DO NOT ROUTE ANY PIPING IN EXTERIOR WALLS UNLESS OTHERWISE INDICATED.
4. SLOPE ALL WASTE PIPING 4" AND LARGER NOT LESS THAN 1/8" PER FOOT. SLOPE ALL WASTE PIPING LESS THAN 4" NOT LESS THAN 1/4" PER FOOT.
5. MINIMUM WASTE PIPE SIZE UNDER SLAB SHALL BE 2". PLUMBING FIXTURES WITH A 1-1/2" OR SMALLER WASTE CONNECTION SIZE WHICH DO NOT CONNECT INTO A 2" OR LARGER WASTE PIPE ABOVE SLAB SHALL TRANSITION TO A 2" WASTE PIPE ABOVE SLAB. IF A RISER CLEANOUT IS REQUIRED, CLEANOUT SHALL BE MINIMUM OF 2" IN SIZE.
6. SLOPE RAINLEADER PIPING AT 1/8" PER FOOT.
7. FOR PIPING THROUGH OR BENEATH FOUNDATION WALLS, SEE 7/M8.1.
8. COORDINATE EXACT LOCATIONS OF ALL FLOOR DRAINS, FLOOR CLEANOUTS, AND FLOOR SINKS WITH ARCHITECTURAL, FURNISHINGS, AND EQUIPMENT AS REQUIRED TO AVOID CONFLICTS.

KEY NOTES

1. PROVIDE A COMBO-Y WITH PLUG AND HEAT TRACE FITTING TO ACCOMMODATE HEAT TRACE ENTRANCE INTO PIPE, COORDINATE WITH ELECTRICAL.
2. 1/2"CW TO TRAP PRIMER CONNECTION, SEE 5/M8.1.
3. INSTALL FLOOR DRAIN IN CONCRETE SUMP, COORDINATE EXACT LOCATION WITH STRUCTURAL AND EXTRACTOR AS REQUIRED. INDIRECT WASTE FROM EXTRACTOR INTO SUMP.
4. 2"W AND 1-1/2"V SERVING BACK-TO-BACK SHOWERS.
5. 3"W AND 2"V SERVING BACK-TO-BACK TOILETS. 2"W AND 1-1/2"V SERVING BACK-TO-BACK FLOOR DRAINS.
6. 4" UP TO WCO.
7. COORDINATE WASTE PIPE ROUTING WITH STRUCTURAL FOOTING AS REQUIRED TO AVOID CONFLICT.

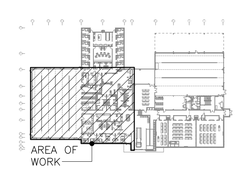

KEYPLAN

STATE OF ALASKA 49TH Timothy C Hickman ME-14669 05/09/18 REGISTERED PROFESSIONAL ENGINEER

Burkhart Croft ARCHITECTS LLC
880 N Street Suite 302 | Anchorage Alaska 99501
T: 907.929.9334 | www.burkhart-croft.com

HZA ENGINEERING SOLUTIONS
HZA Engineering, LLC
113 W. Northern Lights Blvd., Suite 240
Anchorage, Alaska 99503
Tel. (907) 562-1012 Fax (907) 562-1013
AK Corporation # AECL081

MATANUSKA-SUSITNA BOROUGH

MSB FIRE STATION 6-2

WASILLA, ALASKA

DATE:	5/9/2018
DRAWN:	MS
CHECKED:	TCH
PROJECT:	2017.064.0
DRAWING TITLE:	UNDERFLOOR PLUMBING PLAN - AREA A
REVISIONS:	
SHEET NO:	M1.1

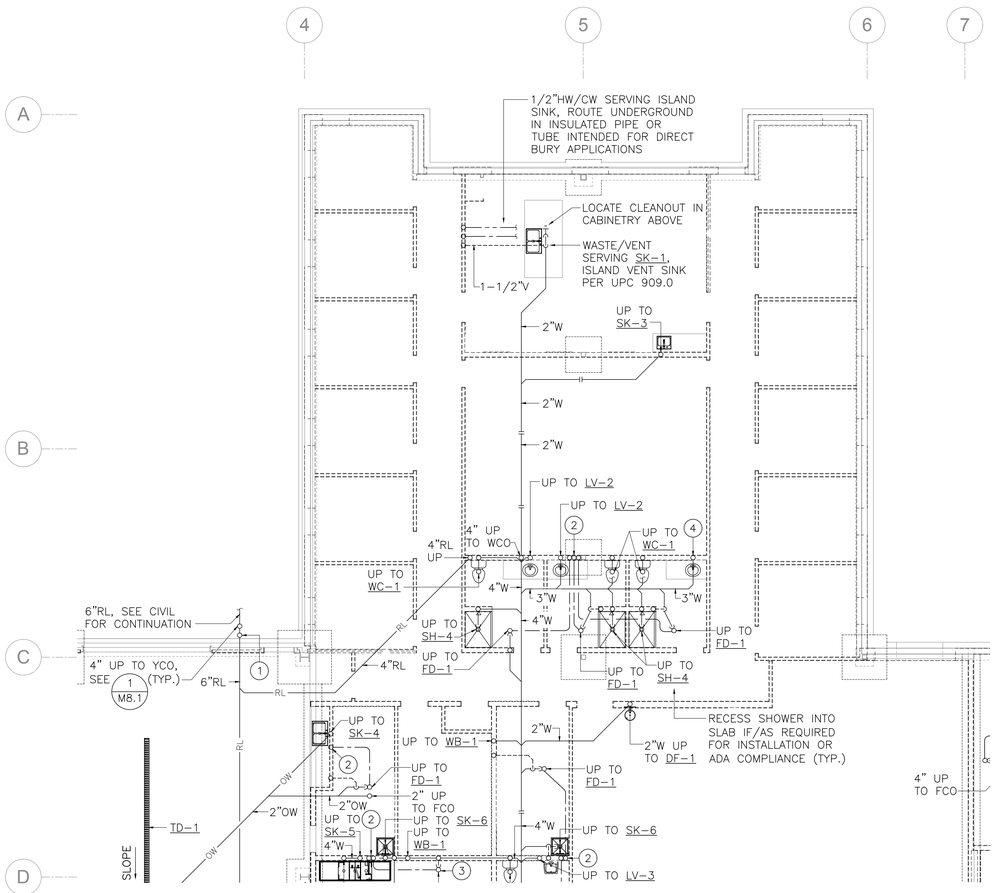

1 / M1.2 UNDERFLOOR PLUMBING PLAN - AREA B

SCALE: 1/8" = 1'-0"

SHEET NOTES

1. BRANCH PIPING TO INDIVIDUAL PLUMBING FIXTURES SHALL EQUAL THE SIZE REQUIRED BY THE PLUMBING FIXTURES SCHEDULE UNLESS OTHERWISE INDICATED.
2. PROVIDE CLEANOUTS ON ALL INDIVIDUAL SINK, LAVATORY, AND DRINKING FOUNTAIN RISERS.
3. DO NOT ROUTE ANY PIPING IN EXTERIOR WALLS UNLESS OTHERWISE INDICATED.
4. SLOPE ALL WASTE PIPING 4" AND LARGER NOT LESS THAN 1/8" PER FOOT. SLOPE ALL WASTE PIPING LESS THAN 4" NOT LESS THAN 1/4" PER FOOT.
5. MINIMUM WASTE PIPE SIZE UNDER SLAB SHALL BE 2". PLUMBING FIXTURES WITH A 1-1/2" OR SMALLER WASTE CONNECTION SIZE WHICH DO NOT CONNECT INTO A 2" OR LARGER WASTE PIPE ABOVE SLAB SHALL TRANSITION TO A 2" WASTE PIPE ABOVE SLAB. IF A RISER CLEANOUT IS REQUIRED, CLEANOUT SHALL BE MINIMUM OF 2" IN SIZE.
6. SLOPE RAINLEADER PIPING AT 1/8" PER FOOT.
7. FOR PIPING THROUGH OR BENEATH FOUNDATION WALLS, SEE 7/M8.1.
8. COORDINATE EXACT LOCATIONS OF ALL FLOOR DRAINS, FLOOR CLEANOUTS, AND FLOOR SINKS WITH ARCHITECTURAL, FURNISHINGS, AND EQUIPMENT AS REQUIRED TO AVOID CONFLICTS.

KEY NOTES

1. PROVIDE A COMBO-Y WITH PLUG AND HEAT TRACE FITTING TO ACCOMMODATE HEAT TRACE ENTRANCE INTO PIPE, COORDINATE WITH ELECTRICAL.
2. 1/2"CW TO TRAP PRIMER CONNECTION, SEE 5/M8.1.
3. INSTALL FLOOR DRAIN IN CONCRETE SUMP, COORDINATE EXACT LOCATION WITH STRUCTURAL AND EXTRACTOR AS REQUIRED. INDIRECT WASTE FROM EXTRACTOR INTO SUMP.
4. 3"W UP TO LV-2 WITH 3" RISER CLEANOUT, TRANSITION TO 1-1/2"W LAVATORY CONNECTION SIZE ABOVE 3" RISER CLEANOUT.

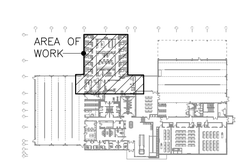

KEYPLAN

Burkhart Croft ARCHITECTS LLC
880 N Street Suite 302 | Anchorage Alaska 99501
T: 907.929.9334 | www.burkhart-croft.com

HZA ENGINEERING SOLUTIONS
HZA Engineering, LLC
113 W. Northern Lights Blvd., Suite 240
Anchorage, Alaska 99503
Tel. (907) 562-1012 Fax (907) 562-1013
AK Corporation # AECL681

MATANUSKA-SUSITNA BOROUGH

MSB FIRE STATION 6-2

WASILLA, ALASKA

DATE:	5/9/2018
DRAWN:	MS
CHECKED:	TCH
PROJECT:	2017.064.0
DRAWING TITLE:	UNDERFLOOR PLUMBING PLAN - AREA B
REVISIONS:	
SHEET NO:	**M1.2**

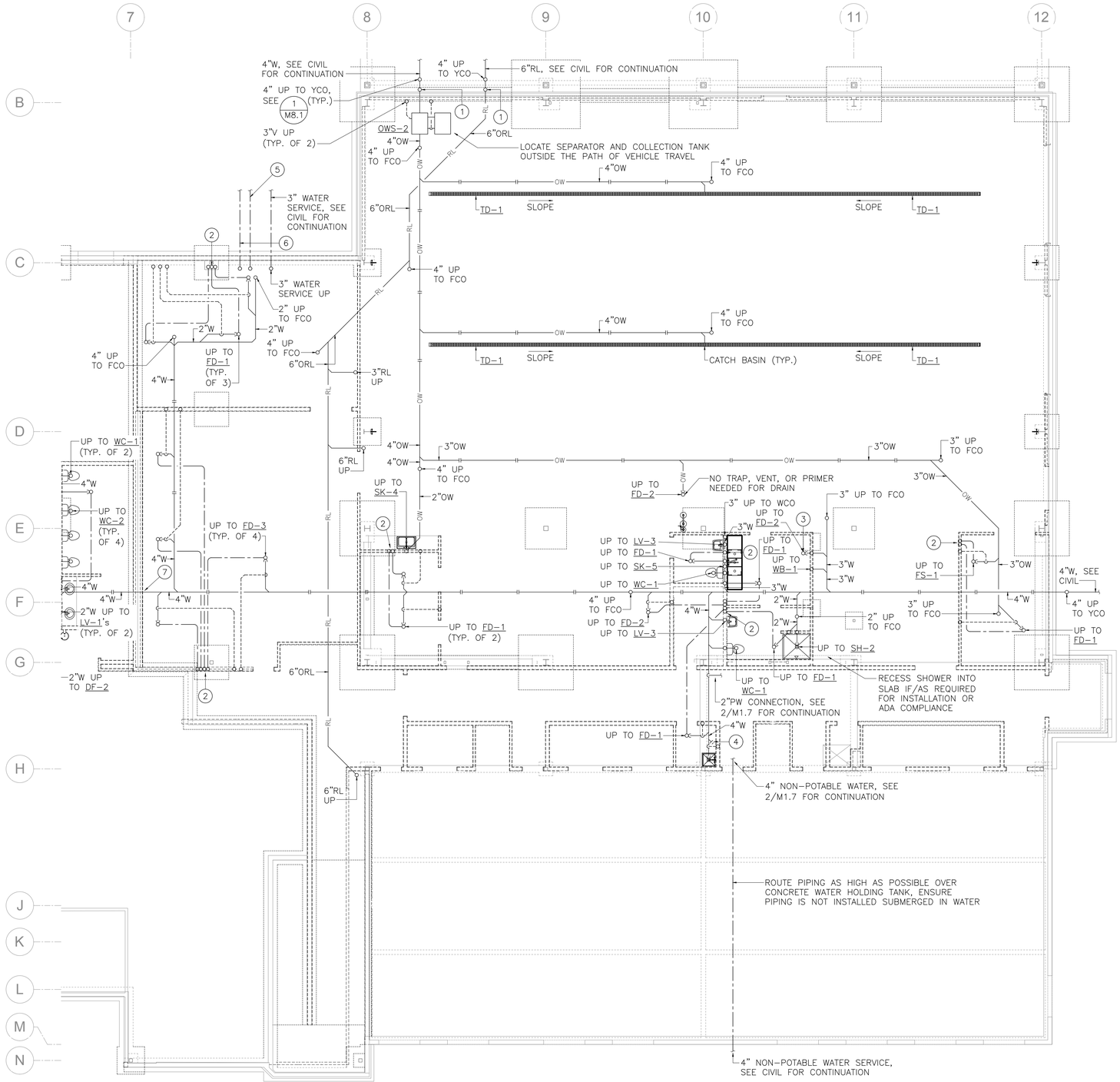

1 M1.3 UNDERFLOOR PLUMBING PLAN - AREA C

SCALE: 1/8" = 1'-0"

SHEET NOTES

1. BRANCH PIPING TO INDIVIDUAL PLUMBING FIXTURES SHALL EQUAL THE SIZE REQUIRED BY THE PLUMBING FIXTURES SCHEDULE UNLESS OTHERWISE INDICATED.
2. PROVIDE CLEANOUTS ON ALL INDIVIDUAL SINK, LAVATORY, AND DRINKING FOUNTAIN RISERS.
3. DO NOT ROUTE ANY PIPING IN EXTERIOR WALLS UNLESS OTHERWISE INDICATED.
4. SLOPE ALL WASTE PIPING 4" AND LARGER NOT LESS THAN 1/8" PER FOOT. SLOPE ALL WASTE PIPING LESS THAN 4" NOT LESS THAN 1/4" PER FOOT.
5. MINIMUM WASTE PIPE SIZE UNDER SLAB SHALL BE 2". PLUMBING FIXTURES WITH A 1-1/2" OR SMALLER WASTE CONNECTION SIZE WHICH DO NOT CONNECT INTO A 2" OR LARGER WASTE PIPE ABOVE SLAB SHALL TRANSITION TO A 2" WASTE PIPE ABOVE SLAB. IF A RISER CLEANOUT IS REQUIRED, CLEANOUT SHALL BE MINIMUM OF 2" IN SIZE.
6. SLOPE RAINLEADER PIPING AT 1/8" PER FOOT.
7. FOR PIPING THROUGH OR BENEATH FOUNDATION WALLS, SEE 7/M8.1.
8. COORDINATE EXACT LOCATIONS OF ALL FLOOR DRAINS, FLOOR CLEANOUTS, AND FLOOR SINKS WITH ARCHITECTURAL, FURNISHINGS, AND EQUIPMENT AS REQUIRED TO AVOID CONFLICTS.

KEY NOTES

1. PROVIDE A COMBO-Y WITH PLUG AND HEAT TRACE FITTING TO ACCOMMODATE HEAT TRACE ENTRANCE INTO PIPE, COORDINATE WITH ELECTRICAL.
2. 1/2"CW TO TRAP PRIMER CONNECTION, SEE 5/M8.1.
3. INSTALL FLOOR DRAIN IN CONCRETE SUMP, COORDINATE EXACT LOCATION WITH STRUCTURAL AND EXTRACTOR AS REQUIRED. INDIRECT WASTE FROM EXTRACTOR INTO SUMP.
4. 4" CLEANOUT LOCATED IN WASTE LINE, LOCATE CLEANOUT EXPOSED IN 164 PUMP ROOM BELOW. ENSURE CLEANOUT IS ACCESSIBLE, COORDINATE WITH PUMP ROOM EQUIPMENT AS REQUIRED.
5. 1-1/4"CW TO IRRIGATION SYSTEM.
6. 3"CW TO EXISTING 6-2 FACILITY, SEE CIVIL FOR CONTINUATION.
7. FINISHED FLOOR ELEVATION DROPS APPROXIMATELY 4' AT THIS LOCATION. COORDINATE WASTE PIPING INVERT AS NEEDED AND ADJUST PIPE ROUTING TO ACCOMMODATE FLOOR ELEVATION CHANGE AS REQUIRED.

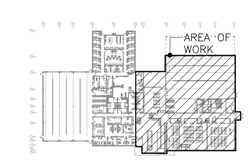

KEYPLAN

STATE OF ALASKA 49TH Timothy C Hickman ME-14669 05/09/18 REGISTERED PROFESSIONAL ENGINEER

Burkhart Croft ARCHITECTS LLC
880 N Street Suite 302 | Anchorage Alaska 99501
T: 907.929.9334 | www.burkhart-croft.com

HZA ENGINEERING SOLUTIONS
HZA Engineering, LLC
113 W. Northern Lights Blvd., Suite 240
Anchorage, Alaska 99503
Tel. (907) 562-1012 Fax (907) 562-1013
AK Corporation # AECL881

MATANUSKA-SUSITNA BOROUGH

MSB FIRE STATION 6-2

WASILLA, ALASKA

DATE:	5/9/2018
DRAWN:	MS
CHECKED:	TCH
PROJECT:	2017.064.0
DRAWING TITLE:	UNDERFLOOR PLUMBING PLAN - AREA C
REVISIONS:	
SHEET NO:	**M1.3**

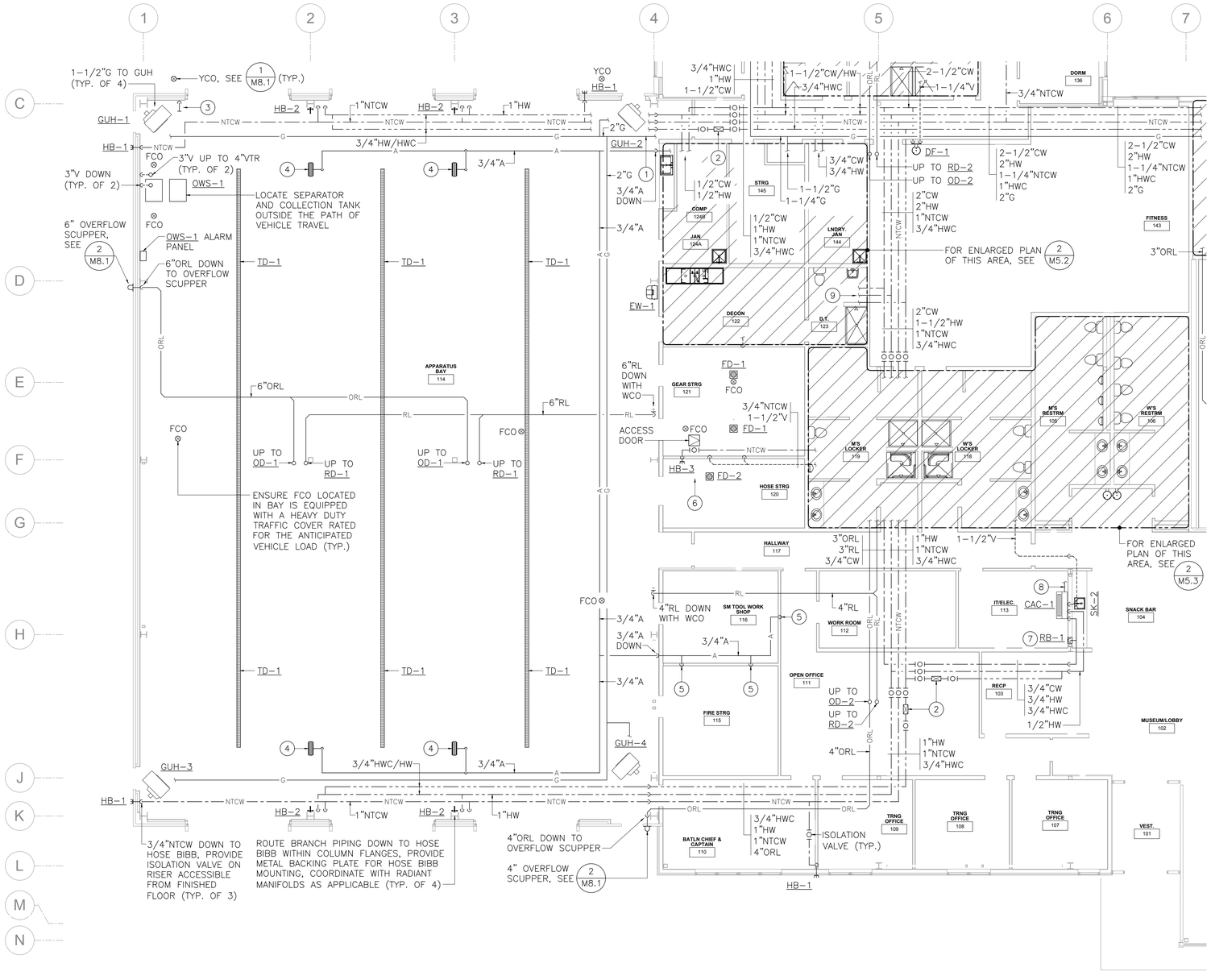

1 M1.4 FIRST FLOOR PLUMBING PLAN - AREA A

SCALE: 1/8" = 1'-0"

SHEET NOTES

1. BRANCH PIPING TO INDIVIDUAL PLUMBING FIXTURES SHALL EQUAL THE SIZE REQUIRED BY THE PLUMBING FIXTURES SCHEDULE UNLESS OTHERWISE INDICATED.
2. PROVIDE CLEANOUTS ON ALL INDIVIDUAL SINK, LAVATORY, AND DRINKING FOUNTAIN RISERS.
3. DO NOT ROUTE ANY PIPING IN EXTERIOR WALLS UNLESS OTHERWISE INDICATED
4. PROVIDE SHOCK-TROL DEVICES AT EACH FIXTURE.
5. PAINT ALL EXPOSED GAS PIPING ON EXTERIOR OF BUILDING THAT IS VISIBLE FROM GRADE, COLOR PER ARCHITECT.
6. SLOPE RAINLEADER PIPING AT 1/8" PER FOOT.
7. COORDINATE EXACT LOCATIONS OF ALL FLOOR DRAINS, FLOOR CLEANOUTS, AND FLOOR SINKS WITH ARCHITECTURAL, FURNISHINGS, AND EQUIPMENT AS REQUIRED TO AVOID CONFLICTS.

KEY NOTES

1. 2-1/2"G FROM ROOF, SEE 1/M4.1 FOR CONTINUATION. PENETRATE HIGH ON BAY WALL ABOVE SINGLE STORY ROOF. DO NOT ROUTE MEDIUM PRESSURE GAS WITHIN THE BUILDING.
2. BALANCE VALVE, SET TO 0.5 GPM. PROVIDE ISOLATION VALVES ON BOTH SIDES OF BALANCE VALVE.
3. 5" STORTZ FIRE TRUCK FILL SERVED OFF OF BOOSTER PUMP LOCATED IN 164 PUMP ROOM. COORDINATE WITH END USER TO VERIFY PIPE TERMINATION TYPE AND PREFERRED LOCATION OF FILL, ENSURE CORRECT INTERFACE IS PROVIDED BETWEEN FILL CONNECTION AND FIRE TRUCK CONNECTION. FIRE TRUCK FILL IS SHOWN ON PLAN FOR REFERENCE ONLY, CONTRACTOR IS RESPONSIBLE FOR DESIGNING ALL ASPECTS OF THE BOOSTER PUMP SYSTEM, INCLUDING FIRE TRUCK FILL CONNECTIONS AND ASSOCIATED PIPING INFRASTRUCTURE.
4. 1/2" COMPRESSED AIR TO RETRACTABLE HOSE REEL, SEE 4/M8.1. PROVIDE A 1/2"x100' HOSE REEL. LOCATE HOSE STOP SUCH THAT HOSE HANGS LOW ENOUGH TO BE REACHED FROM FINISHED FLOOR ELEVATION, COORDINATE WITH END USER FOR DESIRED HOSE HEIGHT OFF FLOOR WHEN HOSE IS RETRACTED. COORDINATE WITH END USER FOR PREFERRED LOCATION OF HOSE REELS.
5. 1/2" COMPRESSED AIR DOWN TO SHOP OUTLET. COORDINATE WITH END USER FOR DESIRED LOCATION OF OUTLET. COORDINATE WITH END USER FOR REQUIRED PIPE TERMINATION TYPE AND IF A FILTER OR REGULATOR IS DESIRED.
6. HB-3 AND FD-2 ARE INTENDED TO SERVE THE HOSE WASHING MACHINE. COORDINATE HOSE BIBB AND DRAIN LOCATIONS WITH EQUIPMENT AND LOCATE HOSE BIBB AND DRAIN AS NEEDED WITHIN ROOM.
7. COORDINATE RB-1 LOCATION WITH CABINETRY AND ARCHITECTURAL. CONNECT RB-1 TO COFFEE MAKER LOCATED IN 104 SNACK BAR AS REQUIRED. CONNECT TO COFFEE MAKER PER COFFEE MAKER'S INSTALLATION INSTRUCTIONS.
8. ROUTE CONDENSATE FROM CAC-1 CONDENSATE PUMP, SAME SIZE AS PUMP CONNECTION, TO TAILPIECE OF NEAREST SINK. INSTALL PER MANUFACTURER'S REQUIREMENTS.
9. 3/4"HWC, 1-1/2"HW, AND 1-1/2"CW TO ENLARGED AREA.

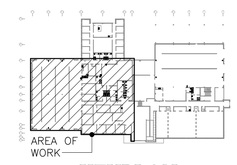

KEYPLAN

STATE OF ALASKA 49TH Timothy C Hickman ME-14669 05/09/18 REGISTERED PROFESSIONAL ENGINEER

Burkhart Croft ARCHITECTS LLC
880 N Street Suite 302 | Anchorage Alaska 99501
T: 907.929.9334 | www.burkhart-croft.com

HZA ENGINEERING SOLUTIONS
HZA Engineering, LLC
113 W. Northern Lights Blvd., Suite 240
Anchorage, Alaska 99503
Tel. (907) 562-1012 Fax (907) 562-1013
AK Corporation # AECL081

MATANUSKA-SUSITNA BOROUGH

MSB FIRE STATION 6-2

WASILLA, ALASKA

DATE:	5/9/2018
DRAWN:	MS
CHECKED:	TCH
PROJECT:	2017.064.0
DRAWING TITLE:	FIRST FLOOR PLUMBING PLAN - AREA A
REVISIONS:	
SHEET NO:	M1.4

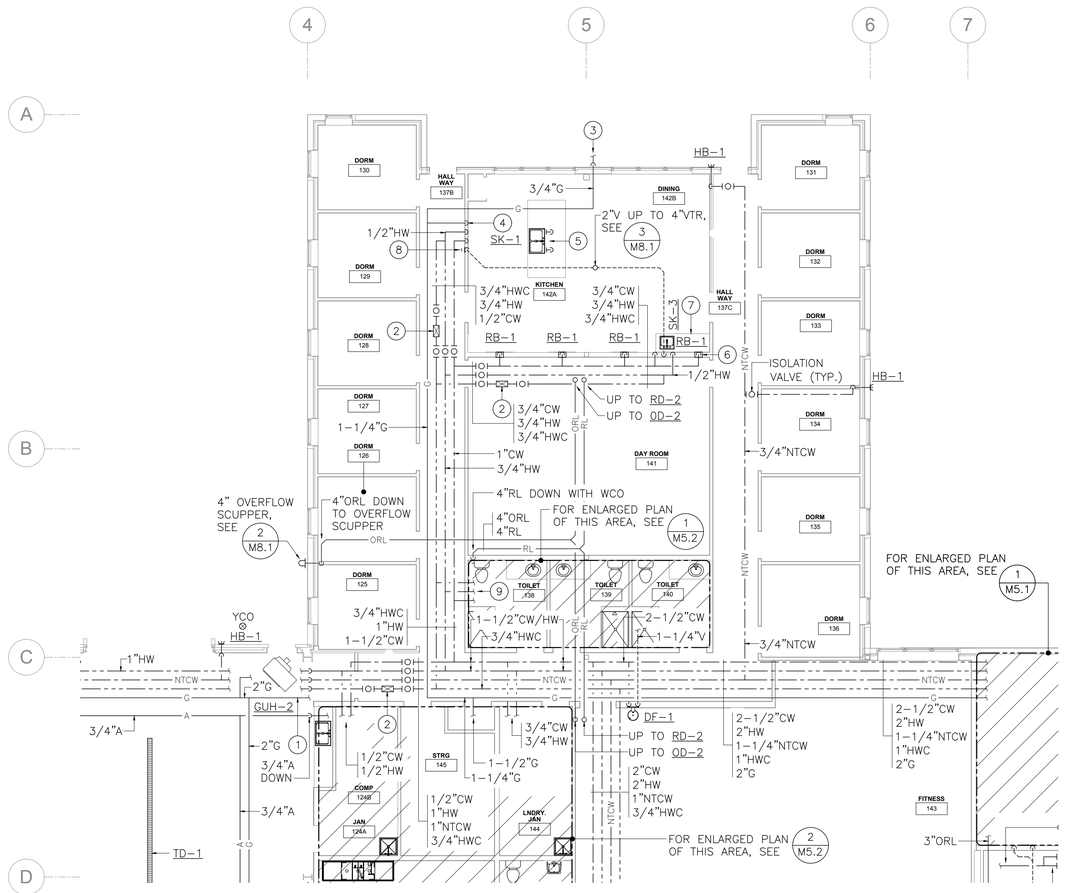

1 M1.5 FIRST FLOOR PLUMBING PLAN - AREA B

SCALE: 1/8" = 1'-0"

SHEET NOTES

1. BRANCH PIPING TO INDIVIDUAL PLUMBING FIXTURES SHALL EQUAL THE SIZE REQUIRED BY THE PLUMBING FIXTURES SCHEDULE UNLESS OTHERWISE INDICATED.
2. PROVIDE CLEANOUTS ON ALL INDIVIDUAL SINK, LAVATORY, AND DRINKING FOUNTAIN RISERS.
3. DO NOT ROUTE ANY PIPING IN EXTERIOR WALLS UNLESS OTHERWISE INDICATED
4. PROVIDE SHOCK-TROL DEVICES AT EACH FIXTURE.
5. PAINT ALL EXPOSED GAS PIPING ON EXTERIOR OF BUILDING THAT IS VISIBLE FROM GRADE, COLOR PER ARCHITECT.
6. SLOPE RAINLEADER PIPING AT 1/8" PER FOOT.
7. COORDINATE EXACT LOCATIONS OF ALL FLOOR DRAINS, FLOOR CLEANOUTS, AND FLOOR SINKS WITH ARCHITECTURAL, FURNISHINGS, AND EQUIPMENT AS REQUIRED TO AVOID CONFLICTS.

KEY NOTES

1. 2-1/2"G FROM ROOF, SEE 1/M4.1 FOR CONTINUATION. PENETRATE HIGH ON BAY WALL ABOVE SINGLE STORY ROOF. DO NOT ROUTE MEDIUM PRESSURE GAS WITHIN THE BUILDING.
2. BALANCE VALVE, SET TO 0.5 GPM. PROVIDE ISOLATION VALVES ON BOTH SIDES OF BALANCE VALVE.
3. 3/4"G DOWN TO GRILLE EXPOSED ON EXTERIOR WALL.
4. 1"G DOWN WALL TO RANGE, PROVIDE WITH SHUTOFF VALVE AND FLEXIBLE CONNECTION, REDUCE 1"G DOWN TO APPLIANCE CONNECTION SIZE DOWNSTREAM OF SHUTOFF VALVE. IN ADDITION TO THE MANUAL SHUTOFF VALVE, PROVIDE ACCOMMODATIONS AND ACCESS FOR ONE RANGE HOOD GAS SOLENOID VALVE AND ONE ALERTING SYSTEM GAS SOLENOID VALVE. ENSURE COMMUNICATION IS PROVIDED FOR EACH SOLENOID VALVE BACK TO ITS RESPECTIVE CONTROLLER.
5. ISLAND VENT SINK PER 2012 UPC SECTION 909.0. ROUTE CW AND HW BRANCH PIPING UNDERGROUND FROM NEARBY WALL TO SINK WITHIN INSULATED PIPING INTENDED FOR DIRECT BURY APPLICATIONS.
6. COORDINATE RB-1 LOCATION WITH CABINETRY AND ARCHITECTURAL. CONNECT RB-1 TO COFFEE MAKER LOCATED IN 142B DINING AS REQUIRED. CONNECT TO COFFEE MAKER PER COFFEE MAKER'S INSTALLATION INSTRUCTIONS.
7. LOCATE INSTA-HOT TANK IN CABINETRY AND COORDINATE TANK LOCATION WITH CABINETRY AND ARCHITECTURAL.
8. PROVIDE WCO ON FOOT VENT PER 2012 UPC SECTION 909.0.
9. 3/4"HWC, 1"HW, AND 1-1/4"CW TO ENLARGED AREA.

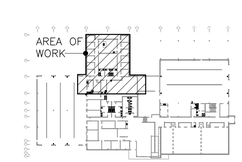

KEYPLAN

STATE OF ALASKA 49TH Timothy C Hickman ME-14669 05/09/18 REGISTERED PROFESSIONAL ENGINEER

Burkhart Croft ARCHITECTS LLC
880 N Street Suite 302 | Anchorage Alaska 99501
T: 907.929.9334 | www.burkhart-croft.com

HZA ENGINEERING SOLUTIONS
HZA Engineering, LLC
113 W. Northern Lights Blvd., Suite 240
Anchorage, Alaska 99503
Tel. (907) 562-1012 Fax (907) 562-1013
AK Corporation # AECL681

MATANUSKA-SUSITNA BOROUGH

MSB FIRE STATION 6-2

WASILLA, ALASKA

DATE:	5/9/2018
DRAWN:	MS
CHECKED:	TCH
PROJECT:	2017.064.0
DRAWING TITLE:	FIRST FLOOR PLUMBING PLAN - AREA B
REVISIONS:	
SHEET NO:	M1.5

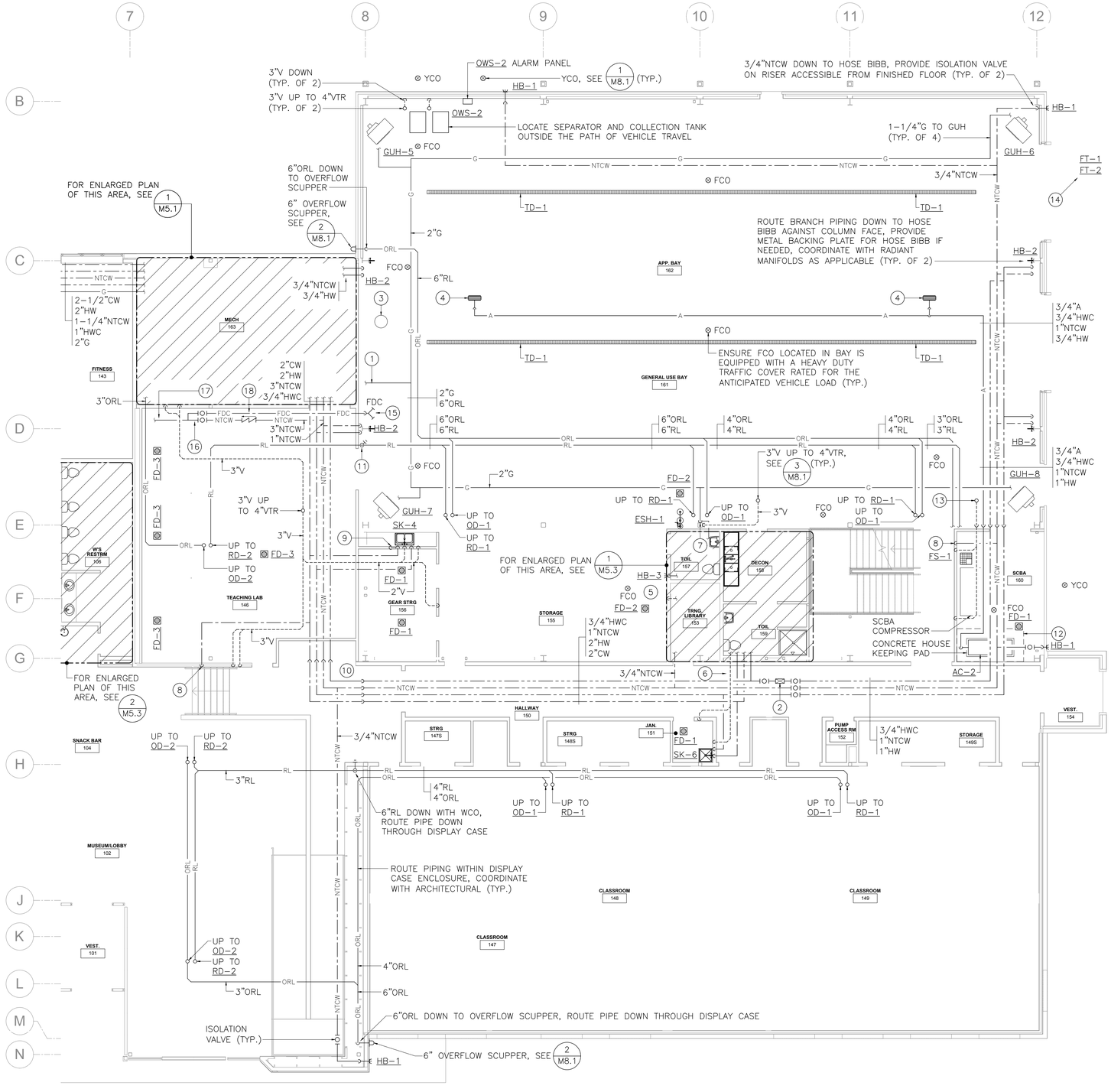

1 / M1.6 FIRST FLOOR PLUMBING PLAN - AREA C

SCALE: 1/8" = 1'-0"

SHEET NOTES

1. BRANCH PIPING TO INDIVIDUAL PLUMBING FIXTURES SHALL EQUAL THE SIZE REQUIRED BY THE PLUMBING FIXTURES SCHEDULE UNLESS OTHERWISE INDICATED.
2. PROVIDE CLEANOUTS ON ALL INDIVIDUAL SINK, LAVATORY, AND DRINKING FOUNTAIN RISERS.
3. DO NOT ROUTE ANY PIPING IN EXTERIOR WALLS UNLESS OTHERWISE INDICATED
4. PROVIDE SHOCK-TROL DEVICES AT EACH FIXTURE.
5. PAINT ALL EXPOSED GAS PIPING ON EXTERIOR OF BUILDING THAT IS VISIBLE FROM GRADE, COLOR PER ARCHITECT.
6. SLOPE RAINLEADER PIPING AT 1/8" PER FOOT.
7. COORDINATE EXACT LOCATIONS OF ALL FLOOR DRAINS, FLOOR CLEANOUTS, AND FLOOR SINKS WITH ARCHITECTURAL, FURNISHINGS, AND EQUIPMENT AS REQUIRED TO AVOID CONFLICTS.

KEY NOTES

1. 2-1/2"G FROM ROOF, SEE 1/M4.1 FOR CONTINUATION. PENETRATE HIGH ON BAY WALL ABOVE SINGLE STORY ROOF. DO NOT ROUTE MEDIUM PRESSURE GAS WITHIN THE BUILDING.
2. BALANCE VALVE, SET TO 0.5 GPM. PROVIDE ISOLATION VALVES ON BOTH SIDES OF BALANCE VALVE.
3. FIRE HYDRANT FOR FIRE TRUCK FILLING, SERVED OFF OF BOOSTER PUMP LOCATED IN 164 PUMP ROOM. COORDINATE WITH END USER TO VERIFY HYDRANT TYPE AND PREFERRED LOCATION, ENSURE CORRECT INTERFACE IS PROVIDED BETWEEN HYDRANT AND FIRE TRUCK CONNECTION. HYDRANT IS SHOWN ON PLAN FOR REFERENCE ONLY, CONTRACTOR IS RESPONSIBLE FOR DESIGNING ALL ASPECTS OF THE BOOSTER PUMP SYSTEM, INCLUDING FIRE TRUCK FILL CONNECTIONS AND ASSOCIATED PIPING INFRASTRUCTURE.
4. 1/2" COMPRESSED AIR TO RETRACTABLE HOSE REEL, SEE 4/M8.1. PROVIDE A 1/2"x100' HOSE REEL. LOCATE HOSE STOP SUCH THAT HOSE HANGS LOW ENOUGH TO BE REACHED FROM FINISHED FLOOR ELEVATION, COORDINATE WITH END USER FOR DESIRED HOSE HEIGHT OFF FLOOR WHEN HOSE IS RETRACTED. COORDINATE WITH END USER FOR PREFERRED LOCATION OF HOSE REELS.
5. HB-3 AND FD-2 ARE INTENDED TO SERVE THE HOSE WASHING MACHINE. COORDINATE HOSE BIBB AND DRAIN LOCATIONS WITH EQUIPMENT AND LOCATE HOSE BIBB AND DRAIN AS NEEDED WITHIN SPACE.
6. 3/4"HWC, 1-1/2"HW, 2"CW, 2"V TO ENLARGED AREA.
7. 1-1/4"G DOWN, ROUTE ALONG FACE OF COLUMN.
8. 1/2"CW TO BATTERY POWERED TRAP PRIMER, SEE 5/M8.1.
9. 1/2"CW TO TRAP PRIMER, SEE 5/M8.1.
10. COORDINATE PIPING AT CEILING/ROOF ELEVATION CHANGE AS REQUIRED.
11. 6"RL DOWN WITH WCO, ROUTE PIPING DOWN EXPOSED IN BAY.
12. MAINTAIN MANUFACTURER REQUIRED SERVICE CLEARANCE AROUND COMPRESSOR, INDIRECT DRAINS AT FLOOR DRAIN, CONNECT 3/4"A TO UNIT AND INSTALL UNIT PER MANUFACTURER'S INSTRUCTIONS.
13. 2"V UP TO 4"VTR, SEE 3/M8.1.
14. LOCATE FUEL TANKS FT-1 AND FT-2 ON FACILITY SITE, SEE CIVIL SITE PLANS FOR LOCATION OF TANKS.
15. FIRE DEPARTMENT CONNECTION FOR CONNECTING FIRE TRUCK TO TRAINING RISER IN 146 TEACHING LAB. COORDINATE WITH FIRE DEPARTMENT FOR FDC CONNECTION TYPE DESIRED. PROVIDE DOWNSTREAM PIPING OFF OF FDC SAME SIZE AS TEACHING LAB RISER CONNECTION.
16. FDC AND 3"NTCW PIPING SERVING TRAINING RISER IN 146 TEACHING LAB. PROVIDE MANUAL ISOLATION VALVES ON BOTH PIPES TO ALLOW USER THE OPTION OF PROVIDING WATER TO THE TEACHING RISER FROM EITHER THE FDC CONNECTION LOCATED IN 161 GENERAL USE BAY OR FROM THE 3"NTCW BRANCH PIPING. COMBINE BOTH PIPES TOGETHER DOWNSTREAM OF ISOLATION VALVES. COMBINED PIPE SIZE SHALL EQUAL TEACHING RISER CONNECTION SIZE. LOCATE MANUAL ISOLATION VALVES SUCH THAT THEY ARE ACCESSIBLE FROM FLOOR LEVEL WITHIN 146 TEACHING LAB.
17. COORDINATE CONNECTION TO TEACHING RISER WITH END USER, MAT-SU BOROUGH, AND THE TEACHING RISER SUPPLIER/MANUFACTURER.
18. PROVIDE A DOUBLE CHECK VALVE ASSEMBLY ON THE 3"NTCW SERVING THE TEACHING RISER. LOCATE ASSEMBLY UPSTREAM OF ISOLATION VALVE.

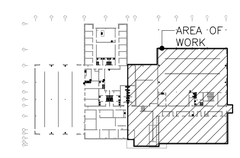

KEYPLAN

STATE OF ALASKA 49TH Timothy C Hickman ME-14669 05/09/18 REGISTERED PROFESSIONAL ENGINEER

Burkhart Croft ARCHITECTS LLC
880 N Street Suite 302 | Anchorage Alaska 99501
T: 907.929.9334 | www.burkhart-croft.com

HZA ENGINEERING SOLUTIONS
HZA Engineering, LLC
113 W. Northern Lights Blvd., Suite 240
Anchorage, Alaska 99503
Tel. (907) 562-1012 Fax (907) 562-1013
AK Corporation # AECL081

MATANUSKA-SUSITNA BOROUGH

MSB FIRE STATION 6-2

WASILLA, ALASKA

DATE:	5/9/2018
DRAWN:	MS
CHECKED:	TCH
PROJECT:	2017.064.0
DRAWING TITLE:	FIRST FLOOR PLUMBING PLAN - AREA C
REVISIONS:	
SHEET NO:	M1.6

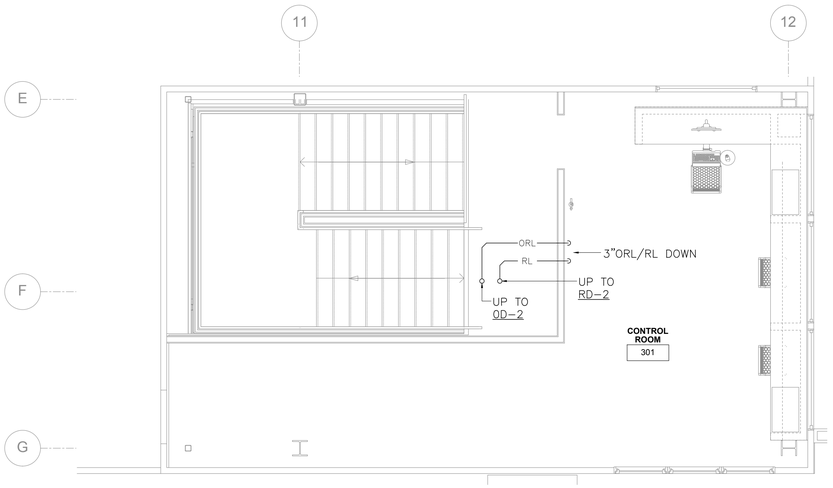

1 M1.7 CONTROL ROOM PLUMBING PLAN

SCALE: 1/4" = 1'-0"

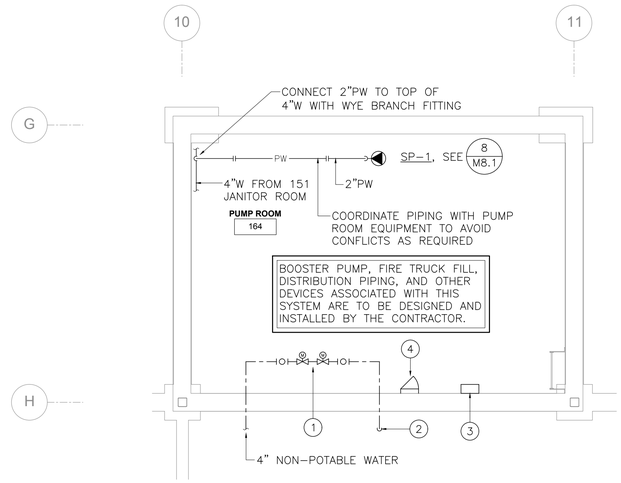

2 M1.7 PUMP ROOM PLUMBING PLAN

SCALE: 1/4" = 1'-0"

SHEET NOTES

1. BRANCH PIPING TO INDIVIDUAL PLUMBING FIXTURES SHALL EQUAL THE SIZE REQUIRED BY THE PLUMBING FIXTURES SCHEDULE UNLESS OTHERWISE INDICATED.
2. DO NOT ROUTE ANY PIPING IN EXTERIOR WALLS UNLESS OTHERWISE INDICATED.
3. SLOPE RAINLEADER PIPING AT 1/8" PER FOOT.

KEY NOTES

1. PROVIDE TWO EACH 2-POSITION SOLENOID CONTROL VALVES IN SERIES ON 4" PIPING SERVING CONCRETE WATER HOLDING TANK. ALSO PROVIDE TWO MANUAL ISOLATION VALVES, ONE UPSTREAM AND ONE DOWNSTREAM OF THE TWO SOLENOID VALVES. PROVIDE PERMANENT ACCESS TO ALL VALVES. COORDINATE VALVE LOCATION WITH PUMP ROOM EQUIPMENT TO AVOID CONFLICT.
2. 4" NON-POTABLE WATER DOWN INTO CONCRETE WATER HOLDING TANK FOR WATER TANK MAKE-UP, SLEEVE PIPE THROUGH CONCRETE WALL. TERMINATE PIPE WITHIN TANK, PROVIDE AIR GAP BETWEEN PIPE TERMINATION AND WATER SURFACE. COORDINATE TANK WALL PENETRATION WITH PUMP ROOM EQUIPMENT TO AVOID CONFLICT.
3. FIRE WATER FILL CONTROL PANEL, PROVIDE WITH TWO FLOAT SWITCHES FOR 2-POSITION SOLENOID CONTROL VALVE ACTUATION AND AUDIBLE ALARM. COORDINATE PANEL LOCATION WITH PUMP ROOM EQUIPMENT. INTER-TIE SOLENOID VALVE OPERATION WITH NON-POTABLE WELL PUMP SO WELL PUMP RUNS WHENEVER FLOAT SWITCHES ACTIVATE. PROVIDE TIME DELAY SO WELL PUMP STARTS AFTER VALVES PROVE OPEN AND WELL PUMP STOPS BEFORE VALVES CLOSE. PROVIDE SOLENOID VALVES WITH SLOW ACTING ACTUATORS TO PREVENT WATER HAMMERING SHOULD VALVES HAVE TO CLOSE WHILE WELL PUMP IS OPERATING.
4. PROVIDE ACCESS DOOR INTO TANK FOR MAINTENANCE ACCESS TO FLOATS. ENSURE ACCESS DOOR IS MOUNTED HIGHER THAN TOP OF MAXIMUM EXPECTED TANK WATER LEVEL.

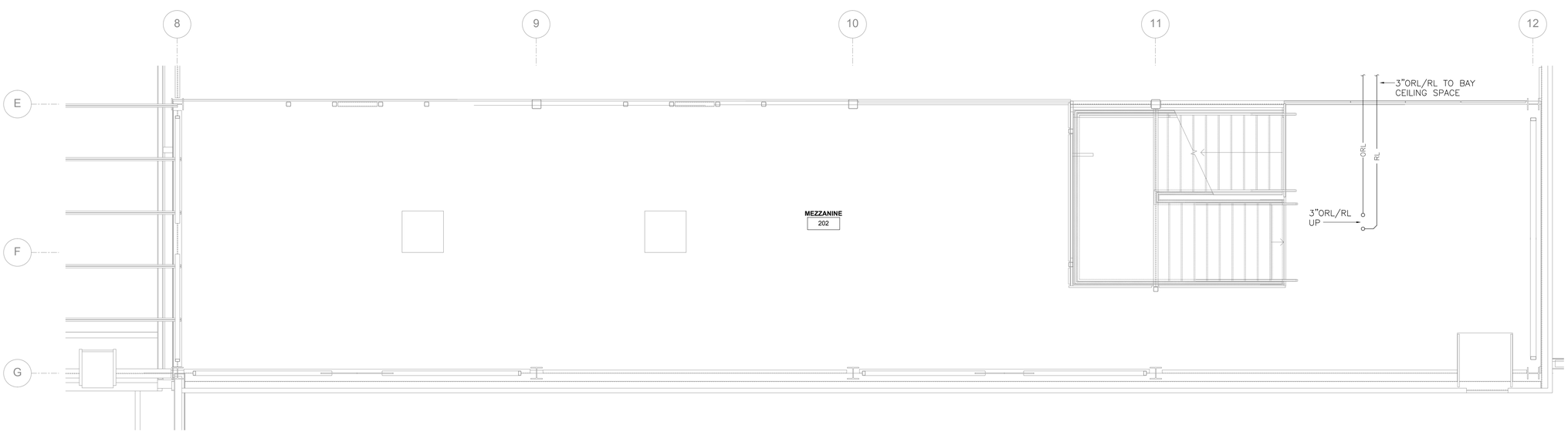

3 M1.7 MEZZANINE PLUMBING PLAN

SCALE: 1/4" = 1'-0"

STATE OF ALASKA
49TH
Timothy C Hickman
ME-14669
05/09/18
REGISTERED PROFESSIONAL ENGINEER

Burkhart Croft
ARCHITECTS LLC
880 N Street Suite 302 | Anchorage Alaska 99501
T: 907.929.9334 | www.burkhart-croft.com

HZA
ENGINEERING SOLUTIONS
HZA Engineering, LLC
113 W. Northern Lights Blvd., Suite 240
Anchorage, Alaska 99503
Tel. (907) 562-1012 Fax (907) 562-1013
AK Corporation # AECL681

MATANUSKA-SUSITNA BOROUGH

MSB FIRE STATION 6-2

WASILLA, ALASKA

DATE:	5/9/2018
DRAWN:	MS
CHECKED:	TCH
PROJECT:	2017.064.0
DRAWING TITLE:	MEZZANINE, CONTROL, AND PUMP ROOM PLUMBING PLANS
REVISIONS:	
SHEET NO:	**M1.7**

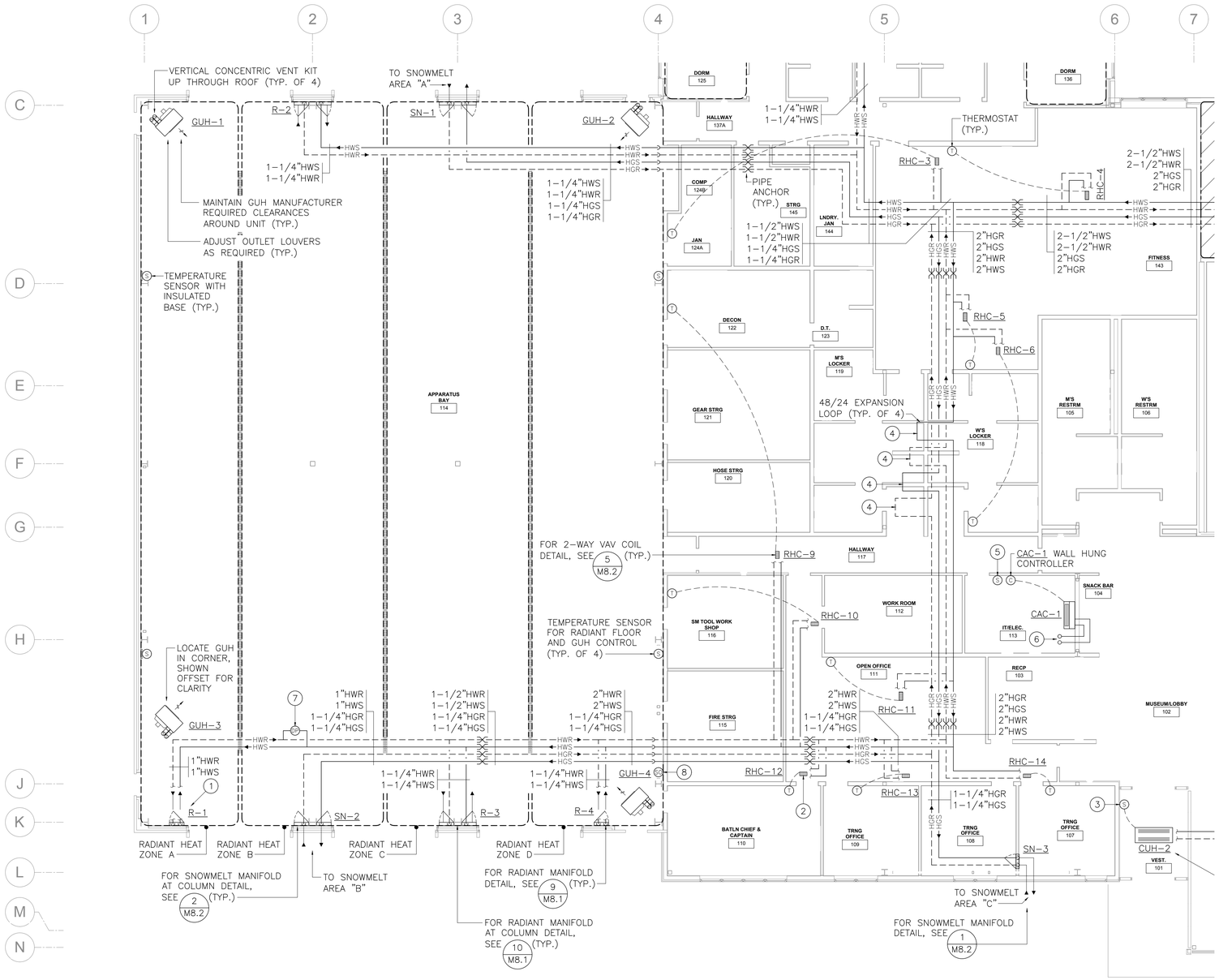

1 / M2.1 FIRST FLOOR HEATING PLAN - AREA A

SCALE: 1/8" = 1'-0"

SHEET NOTES

1. BRANCH PIPING TO INDIVIDUAL TERMINAL HEATING UNITS SHALL BE 3/4" UNLESS OTHERWISE INDICATED.
2. DO NOT ROUTE ANY PIPING IN EXTERIOR WALL ASSEMBLIES.
3. INSTALL RADIANT MANIFOLDS SUCH THAT MANIFOLD CONTROL VALVE OR ANY OTHER ELECTRONIC DEVICE ASSOCIATED WITH THE MANIFOLD IS NO LESS THAN 18"AFF.
4. PROVIDE ACCESS DOORS OF APPROPRIATE SIZE AS REQUIRED TO ALL EQUIPMENT AND VALVES LOCATED ABOVE HARD LID CEILINGS OR WITHIN WALLS REQUIRING PERMANENT ACCESS.
5. INSTALL THERMOSTATS/SENSORS ON WALLS AT APPROXIMATE LOCATIONS INDICATED AFTER INSTALLATION OF FURNISHINGS. COORDINATE FINAL LOCATION AS REQUIRED SO THAT FURNISHINGS DO NOT COVER OR BLOCK ACCESS TO THERMOSTATS/SENSORS. DO NOT INSTALL ANY THERMOSTATS/SENSORS BEHIND DOORS.
6. ROUTE PIPING IN CEILING SPACE AS HIGH AS POSSIBLE AND THROUGH STRUCTURAL MEMBERS WHERE OPEN WEB TRUSSES ARE AVAILABLE, COORDINATE PIPE ROUTING WITH DUCTWORK AND OTHER TRADES AS REQUIRED.
7. PROVIDE INSULATION BENEATH PORTIONS OF SLAB WITH RADIANT TUBING, COORDINATE WITH STRUCTURAL AND ARCHITECTURAL AS REQUIRED.
8. BRANCH PIPING TO INDIVIDUAL REHEAT COILS SHALL EQUAL THE MINIMUM BRANCH PIPE SIZE REQUIRED BY THE VAV BOX SCHEDULE ON M0.3.

KEY NOTES

1. PROVIDE 3-WAY VALVE AT THIS RADIANT MANIFOLD LOCATION, SEE 9/M8.1. PROVIDE 2-WAY VALVES AT OTHER MANIFOLDS.
2. PROVIDE REHEAT COIL WITH 3-WAY VALVE, SEE 6/M8.2.
3. PROVIDE DDC PROGRAMMABLE TEMPERATURE SENSOR OR ADJUSTABLE THERMOSTAT WITH LOCKING COVER.
4. CONTRACTOR MAY INSTALL PRE-MANUFACTURED EXPANSION LOOPS WITH MINIMUM ±1.5" EXPANSION COMPENSATION IN LIEU OF HARD PIPE EXPANSION LOOPS IF DESIRED.
5. DDC MONITORED TEMPERATURE SENSOR FOR ROOM MONITORING ONLY.
6. REFRIGERANT PIPING UP THROUGH ROOF. SIZE AND INSTALL REFRIGERANT PIPING PER MANUFACTURER'S REQUIREMENTS.
7. 1 OF 2 DIFFERENTIAL PRESSURE SENSORS FOR CP-1A/B VFD OPERATION CONTROL. USE AVERAGE OF SENSORS FOR VFD CONTROL SETPOINT.
8. SNOWMELT SYSTEM MANUAL OVERRIDE, COORDINATE WITH SNOWMELT CONTROL PROVIDER FOR EXACT MODEL TYPE. COORDINATE FINAL LOCATION FOR MANUAL OVERRIDE WITH BUILDING OWNER AND END USERS.

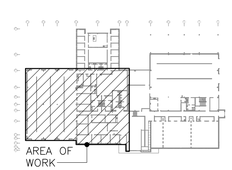

KEYPLAN

STATE OF ALASKA 49TH Timothy C Hickman ME-14669 05/09/18 REGISTERED PROFESSIONAL ENGINEER

Burkhart Croft ARCHITECTS LLC
880 N Street Suite 302 | Anchorage Alaska 99501
T: 907.929.9334 | www.burkhart-croft.com

HZA ENGINEERING SOLUTIONS
HZA Engineering, LLC
113 W. Northern Lights Blvd., Suite 240
Anchorage, Alaska 99503
Tel. (907) 562-1012 Fax (907) 562-1013
AK Corporation # AECL681

MATANUSKA-SUSITNA BOROUGH

MSB FIRE STATION 6-2

WASILLA, ALASKA

DATE:	5/9/2018
DRAWN:	LRJ
CHECKED:	TCH
PROJECT:	2017.064.0
DRAWING TITLE:	FIRST FLOOR HEATING PLAN - AREA A
REVISIONS:	
SHEET NO:	M2.1

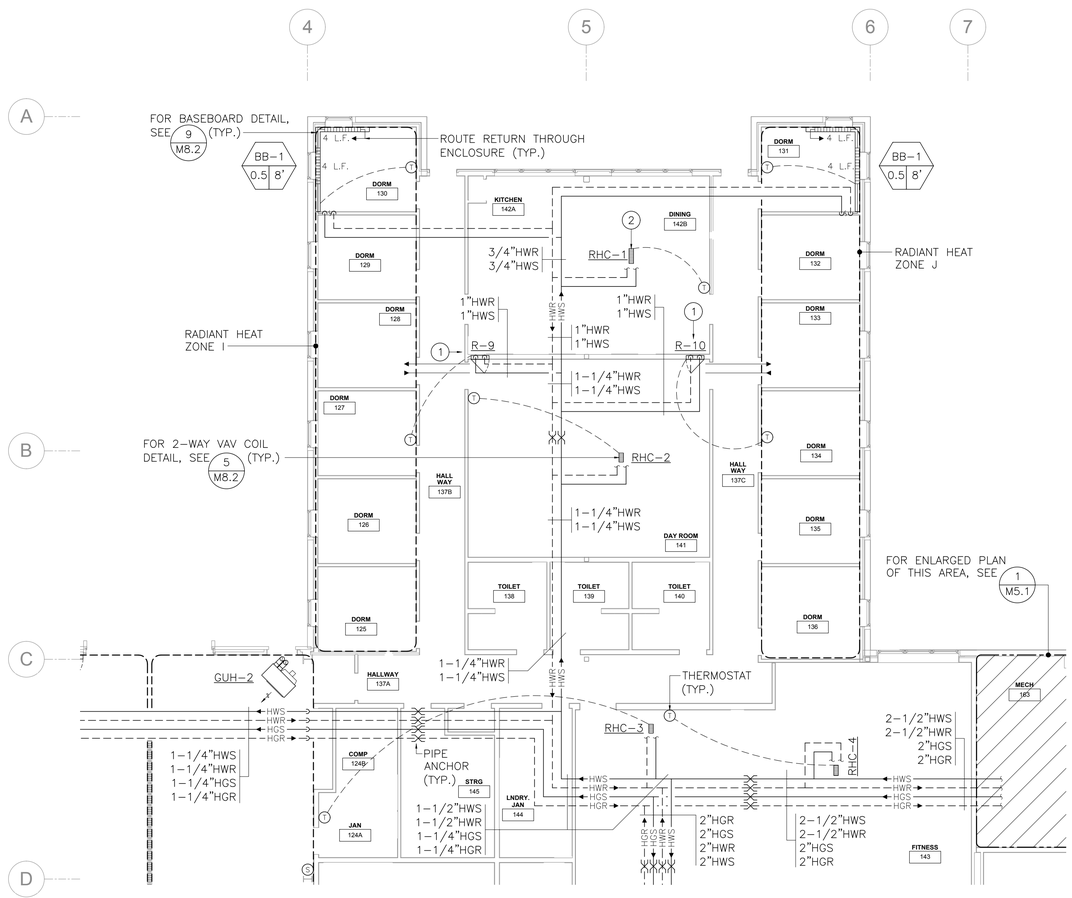

1 / M2.2 FIRST FLOOR HEATING PLAN - AREA B

SCALE: 1/8" = 1'-0"

SHEET NOTES

1. BRANCH PIPING TO INDIVIDUAL TERMINAL HEATING UNITS SHALL BE 3/4" UNLESS OTHERWISE INDICATED.
2. DO NOT ROUTE ANY PIPING IN EXTERIOR WALL ASSEMBLIES.
3. INSTALL RADIANT MANIFOLDS SUCH THAT MANIFOLD CONTROL VALVE OR ANY OTHER ELECTRONIC DEVICE ASSOCIATED WITH THE MANIFOLD IS NO LESS THAN 18"AFF.
4. PROVIDE ACCESS DOORS OF APPROPRIATE SIZE AS REQUIRED TO ALL EQUIPMENT AND VALVES LOCATED ABOVE HARD LID CEILINGS OR WITHIN WALLS REQUIRING PERMANENT ACCESS.
5. INSTALL THERMOSTATS/SENSORS ON WALLS AT APPROXIMATE LOCATIONS INDICATED AFTER INSTALLATION OF FURNISHINGS. COORDINATE FINAL LOCATION AS REQUIRED SO THAT FURNISHINGS DO NOT COVER OR BLOCK ACCESS TO THERMOSTATS/SENSORS. DO NOT INSTALL ANY THERMOSTATS/SENSORS BEHIND DOORS.
6. ROUTE PIPING IN CEILING SPACE AS HIGH AS POSSIBLE AND THROUGH STRUCTURAL MEMBERS WHERE OPEN WEB TRUSSES ARE AVAILABLE, COORDINATE PIPE ROUTING WITH DUCTWORK AND OTHER TRADES AS REQUIRED.
7. PROVIDE INSULATION BENEATH PORTIONS OF SLAB WITH RADIANT TUBING, COORDINATE WITH STRUCTURAL AND ARCHITECTURAL AS REQUIRED.
8. BRANCH PIPING TO INDIVIDUAL REHEAT COILS SHALL EQUAL THE MINIMUM BRANCH PIPE SIZE REQUIRED BY THE VAV BOX SCHEDULE ON M0.3.

KEY NOTES

1. PROVIDE 2-WAY VALVE AT THIS RADIANT MANIFOLD LOCATION, SEE 9/M8.1.
2. PROVIDE REHEAT COIL WITH 3-WAY VALVE, SEE 6/M8.2.

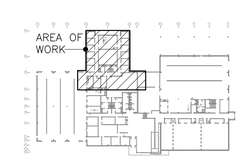

KEYPLAN

STATE OF ALASKA 49TH
Timothy C Hickman
ME-14669
05/09/18
REGISTERED PROFESSIONAL ENGINEER

Burkhart Croft ARCHITECTS LLC
880 N Street Suite 302 | Anchorage Alaska 99501
T: 907.929.9334 | www.burkhart-croft.com

HZA ENGINEERING SOLUTIONS
HZA Engineering, LLC
113 W. Northern Lights Blvd., Suite 240
Anchorage, Alaska 99503
Tel. (907) 562-1012 Fax (907) 562-1013
AK Corporation # AECL681

MATANUSKA-SUSITNA BOROUGH

MSB FIRE STATION 6-2

WASILLA, ALASKA

DATE:	5/9/2018
DRAWN:	LRJ
CHECKED:	TCH
PROJECT:	2017.064.0
DRAWING TITLE:	FIRST FLOOR HEATING PLAN - AREA B
REVISIONS:	
SHEET NO:	**M2.2**

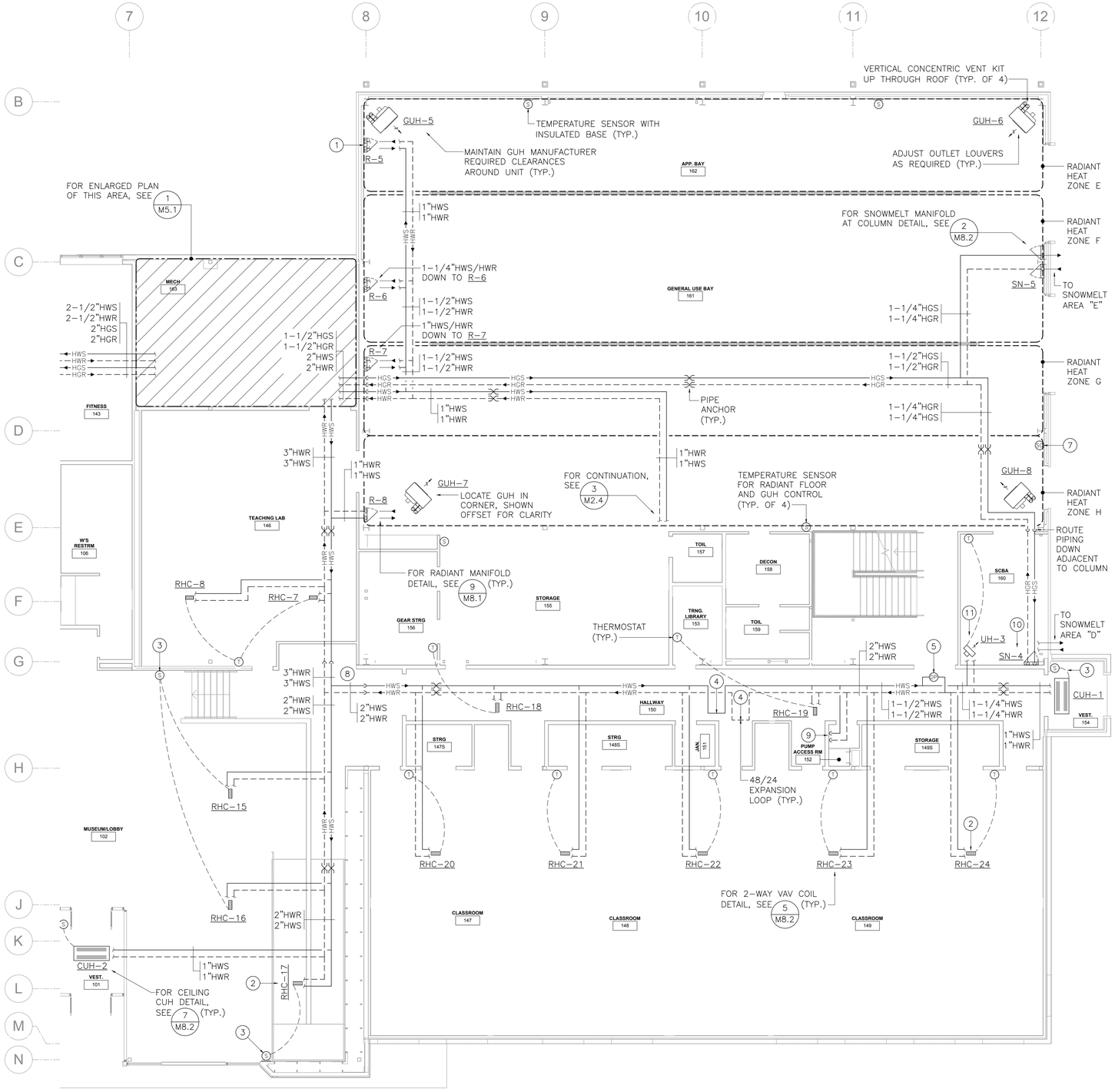

1 M2.3 FIRST FLOOR HEATING PLAN - AREA C

SCALE: 1/8" = 1'-0"

SHEET NOTES

1. BRANCH PIPING TO INDIVIDUAL TERMINAL HEATING UNITS SHALL BE 3/4" UNLESS OTHERWISE INDICATED.
2. DO NOT ROUTE ANY PIPING IN EXTERIOR WALL ASSEMBLIES.
3. INSTALL RADIANT MANIFOLDS SUCH THAT MANIFOLD CONTROL VALVE OR ANY OTHER ELECTRONIC DEVICE ASSOCIATED WITH THE MANIFOLD IS NO LESS THAN 18"AFF.
4. PROVIDE ACCESS DOORS OF APPROPRIATE SIZE AS REQUIRED TO ALL EQUIPMENT AND VALVES LOCATED ABOVE HARD LID CEILINGS OR WITHIN WALLS REQUIRING PERMANENT ACCESS.
5. INSTALL THERMOSTATS/SENSORS ON WALLS AT APPROXIMATE LOCATIONS INDICATED AFTER INSTALLATION OF FURNISHINGS. COORDINATE FINAL LOCATION AS REQUIRED SO THAT FURNISHINGS DO NOT COVER OR BLOCK ACCESS TO THERMOSTATS/SENSORS. DO NOT INSTALL ANY THERMOSTATS/SENSORS BEHIND DOORS.
6. ROUTE PIPING IN CEILING SPACE AS HIGH AS POSSIBLE AND THROUGH STRUCTURAL MEMBERS WHERE OPEN WEB TRUSSES ARE AVAILABLE, COORDINATE PIPE ROUTING WITH DUCTWORK AND OTHER TRADES AS REQUIRED.
7. PROVIDE INSULATION BENEATH PORTIONS OF SLAB WITH RADIANT TUBING, COORDINATE WITH STRUCTURAL AND ARCHITECTURAL AS REQUIRED.
8. BRANCH PIPING TO INDIVIDUAL REHEAT COILS SHALL EQUAL THE MINIMUM BRANCH PIPE SIZE REQUIRED BY THE VAV BOX SCHEDULE ON M0.3.

KEY NOTES

1. PROVIDE 3-WAY VALVE AT THIS RADIANT MANIFOLD LOCATION, SEE 9/M8.1. PROVIDE 2-WAY VALVES AT OTHER MANIFOLDS.
2. PROVIDE REHEAT COIL WITH 3-WAY VALVE, SEE 6/M8.2.
3. PROVIDE DDC PROGRAMMABLE TEMPERATURE SENSOR OR ADJUSTABLE THERMOSTAT WITH LOCKING COVER.
4. CONTRACTOR MAY INSTALL PRE-MANUFACTURED EXPANSION LOOPS WITH MINIMUM ±1.5" EXPANSION COMPENSATION IN LIEU OF HARD PIPE EXPANSION LOOPS IF DESIRED.
5. 1 OF 2 DIFFERENTIAL PRESSURE SENSORS FOR CP-1A/B VFD OPERATION CONTROL. USE AVERAGE OF SENSORS FOR VFD CONTROL SETPOINT.
6. NOT USED.
7. SNOWMELT SYSTEM MANUAL OVERRIDE, COORDINATE WITH SNOWMELT CONTROL PROVIDER FOR EXACT MODEL TYPE. COORDINATE FINAL LOCATION FOR MANUAL OVERRIDE WITH BUILDING OWNER AND END USERS.
8. COORDINATE PIPING AT CEILING/ROOF ELEVATION CHANGE AS REQUIRED.
9. 1"HWS/HWR DOWN TO UH-2 IN PUMP ROOM. COORDINATE PIPE DROPS WITH DUCT DROP IN SAME LOCATION. ENSURE PIPING DOES NOT BLOCK ACCESS TO SHIPS LADDER.
10. FOR SNOWMELT MANIFOLD DETAIL, SEE 1/M8.2.
11. FOR UNIT HEATER DETAIL, SEE 4/M8.2.

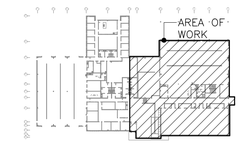

KEYPLAN

STATE OF ALASKA 49TH Timothy C Hickman ME-14669 05/09/18 REGISTERED PROFESSIONAL ENGINEER

Burkhart Croft ARCHITECTS LLC
880 N Street Suite 302 | Anchorage Alaska 99501
T: 907.929.9334 | www.burkhart-croft.com

HZA ENGINEERING SOLUTIONS
HZA Engineering, LLC
113 W. Northern Lights Blvd., Suite 240
Anchorage, Alaska 99503
Tel. (907) 562-1012 Fax (907) 562-1013
AK Corporation # AECI.0381

MATANUSKA-SUSITNA BOROUGH

MSB FIRE STATION 6-2

WASILLA, ALASKA

DATE:	5/9/2018
DRAWN:	LRJ
CHECKED:	TCH
PROJECT:	2017.064.0
DRAWING TITLE:	FIRST FLOOR HEATING PLAN - AREA C
REVISIONS:	
SHEET NO:	M2.3

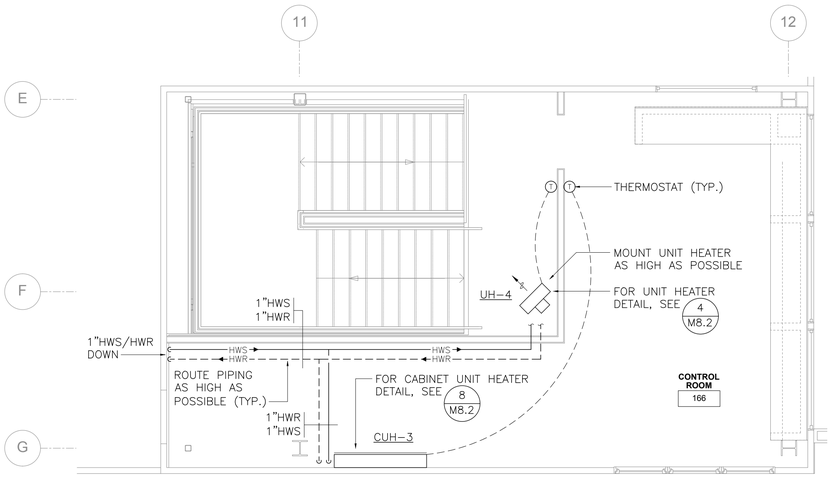

1 M2.4 CONTROL ROOM HEATING PLAN

SCALE: 1/4" = 1'-0"

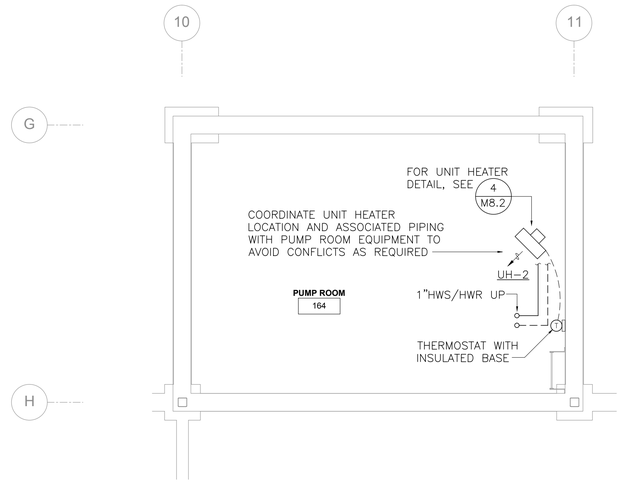

2 M2.4 PUMP ROOM HEATING PLAN

SCALE: 1/4" = 1'-0"

SHEET NOTES

1. BRANCH PIPING TO INDIVIDUAL TERMINAL HEATING UNITS SHALL BE 3/4" UNLESS OTHERWISE INDICATED.
2. DO NOT ROUTE ANY PIPING IN EXTERIOR WALL ASSEMBLIES.
3. PROVIDE ACCESS DOORS OF APPROPRIATE SIZE AS REQUIRED TO ALL EQUIPMENT AND VALVES LOCATED ABOVE HARD LID CEILINGS OR WITHIN WALLS REQUIRING PERMANENT ACCESS.
4. INSTALL THERMOSTATS/SENSORS ON WALLS AT APPROXIMATE LOCATIONS INDICATED AFTER INSTALLATION OF FURNISHINGS. COORDINATE FINAL LOCATION AS REQUIRED SO THAT FURNISHINGS DO NOT COVER OR BLOCK ACCESS TO THERMOSTATS/SENSORS. DO NOT INSTALL ANY THERMOSTATS/SENSORS BEHIND DOORS.
5. ROUTE PIPING IN CEILING SPACE AS HIGH AS POSSIBLE AND THROUGH STRUCTURAL MEMBERS WHERE OPEN WEB TRUSSES ARE AVAILABLE, COORDINATE PIPE ROUTING WITH DUCTWORK AND OTHER TRADES AS REQUIRED.

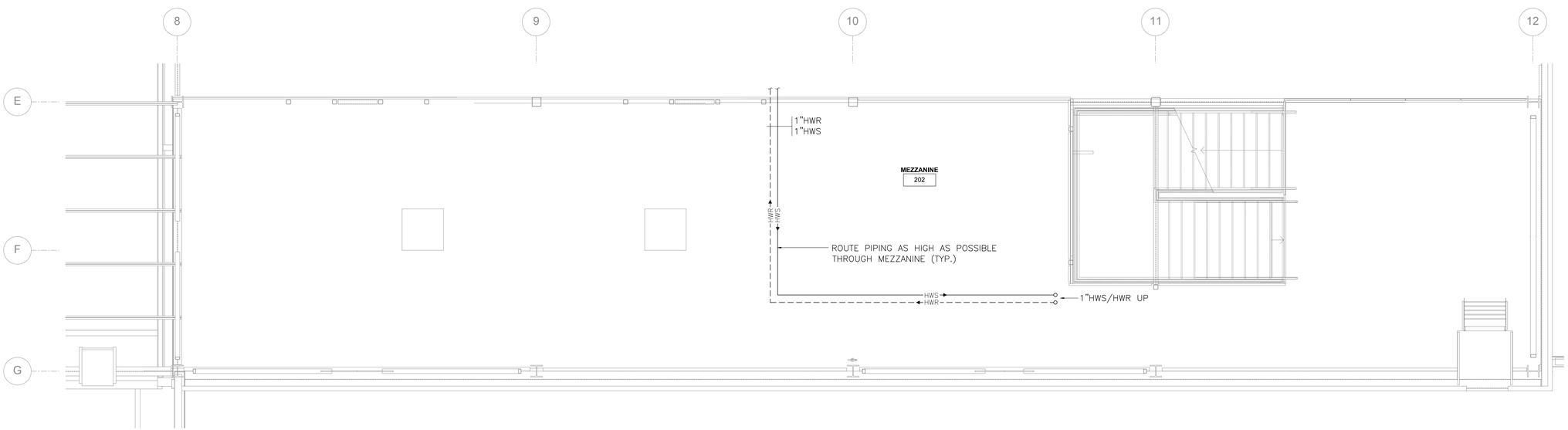

3 M2.4 MEZZANINE HEATING PLAN

SCALE: 1/4" = 1'-0"

STATE OF ALASKA
49 TH
Timothy C Hickman
ME-14669
05/09/18
REGISTERED PROFESSIONAL ENGINEER

Burkhart Croft
ARCHITECTS LLC
880 N Street Suite 302 | Anchorage Alaska 99501
T: 907.929.9334 | www.burkhart-croft.com

HZA
ENGINEERING SOLUTIONS
HZA Engineering, LLC
113 W. Northern Lights Blvd., Suite 240
Anchorage, Alaska 99503
Tel. (907) 562-1012 Fax (907) 562-1013
AK Corporation # AECL881

MATANUSKA-SUSITNA BOROUGH

MSB FIRE STATION 6-2

WASILLA, ALASKA

DATE:	5/9/2018
DRAWN:	LRJ
CHECKED:	TCH
PROJECT:	2017.064.0
DRAWING TITLE:	MEZZANINE, CONTROL, AND PUMP ROOM HEATING PLANS
REVISIONS:	
SHEET NO:	M2.4

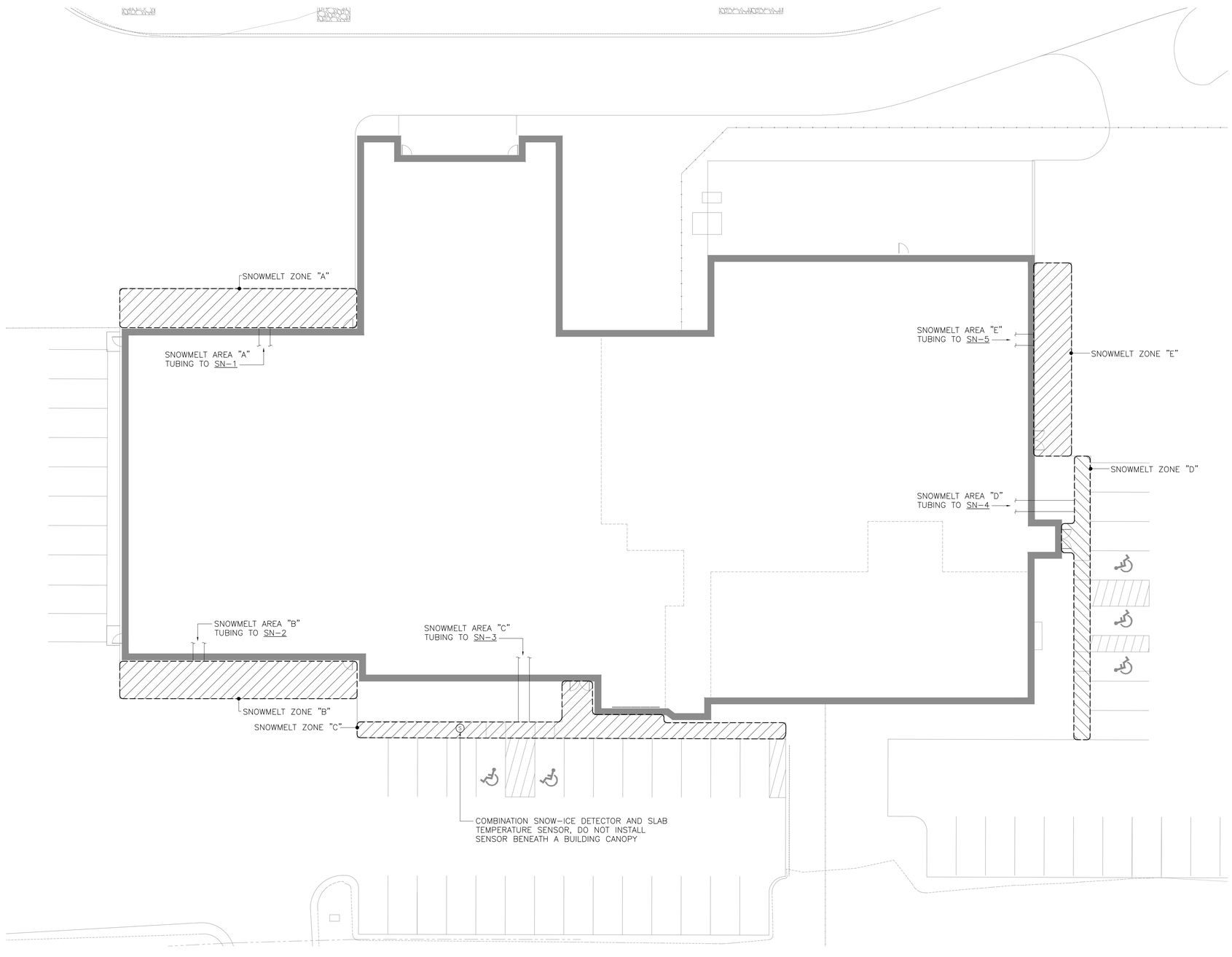

1 / M2.5 SNOWMELT PLAN

SCALE: 1/16" = 1'-0"

SHEET NOTES

1. PROVIDE INSULATION BENEATH AREAS OF SNOWMELT, COORDINATE WITH SNOWMELT TUBING MANUFACTURER AND CIVIL.
2. AT CONCRETE EXPANSION JOINTS, WRAP PIPING WITH PIPE INSULATION PER TUBING MANUFACTURER'S RECOMMENDATIONS. COORDINATE LOCATION OF CONCRETE EXPANSION JOINTS WITH CIVIL. FOR SNOWMELT CONCRETE JOINT DETAIL, SEE 3/M8.2.

STATE OF ALASKA
49 TH
Timothy C Hickman
ME-14669
05/09/18
REGISTERED PROFESSIONAL ENGINEER

Burkhart Croft
ARCHITECTS LLC
880 N Street Suite 302 | Anchorage Alaska 99501
T: 907.929.9334 | www.burkhart-croft.com

HZA
ENGINEERING SOLUTIONS
HZA Engineering, LLC
113 W. Northern Lights Blvd., Suite 240
Anchorage, Alaska 99503
Tel. (907) 562-1012 Fax (907) 562-1013
AK Corporation # AECL681

MATANUSKA-SUSITNA BOROUGH

MSB FIRE STATION 6-2

WASILLA, ALASKA

DATE:	5/9/2018
DRAWN:	LRJ
CHECKED:	TCH
PROJECT:	2017.064.0
DRAWING TITLE:	SNOWMELT PLAN
REVISIONS:	
SHEET NO:	M2.5

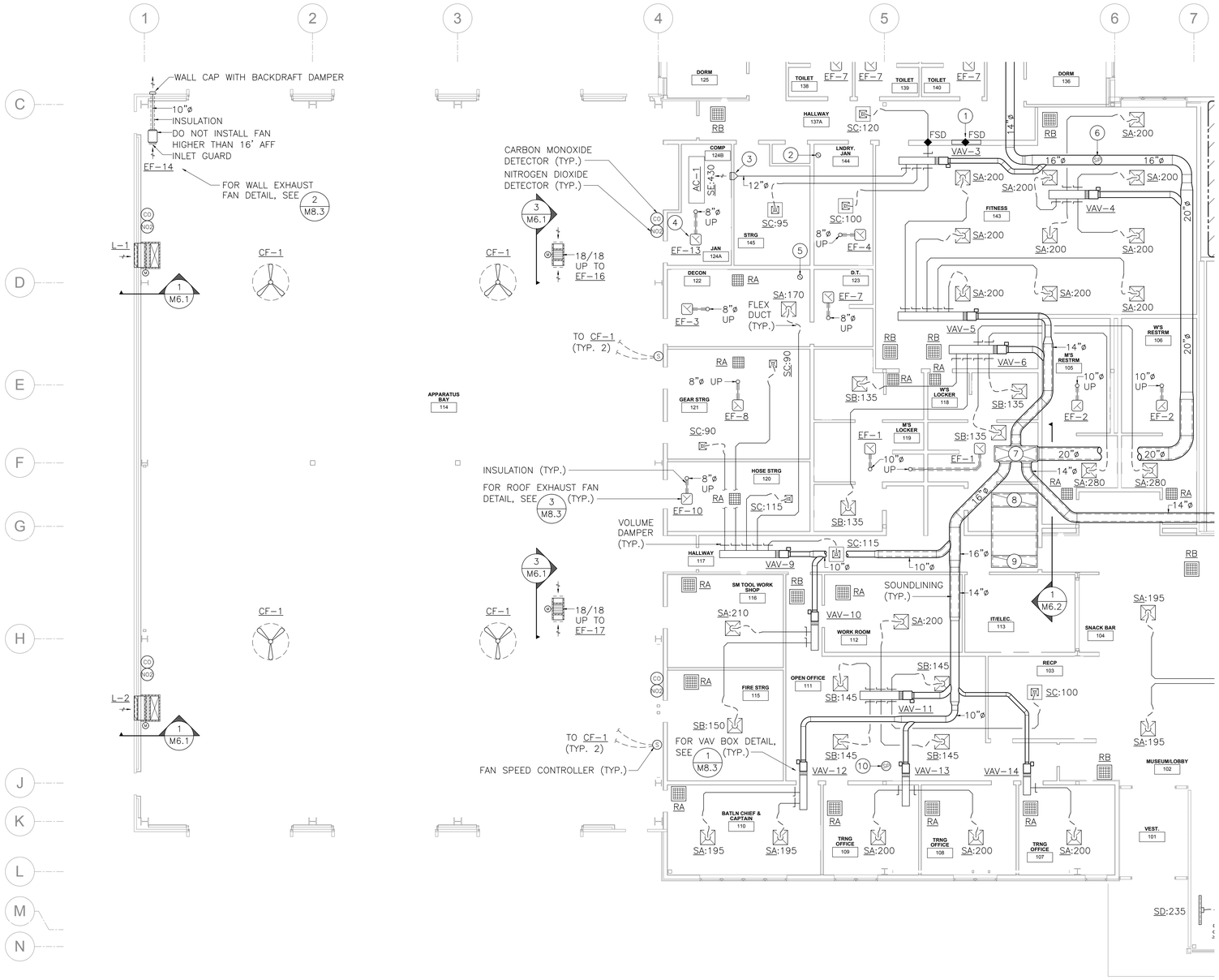

1 M3.1 FIRST FLOOR VENTILATION PLAN - AREA A

SCALE: 1/8" = 1'-0"

SHEET NOTES

1. BRANCH DUCTWORK TO INDIVIDUAL DIFFUSERS SHALL EQUAL THE DIFFUSER NECK SIZE UNLESS OTHERWISE INDICATED.
2. BRANCH DUCTWORK TO INDIVIDUAL VAV BOXES SHALL EQUAL THE VAV BOX CONNECTION SIZE UNLESS OTHERWISE INDICATED.
3. COORDINATE FINAL DIFFUSER AND GRILLE LOCATIONS WITH THE ARCHITECTURAL REFLECTED CEILING PLAN AND LIGHTING.
4. VOLUME DAMPERS LOCATED ABOVE HARD LID CEILINGS SHALL BE PROVIDED WITH REMOTE OPERATORS.
5. PROVIDE ACCESS DOORS AS REQUIRED FOR ALL EQUIPMENT LOCATED ABOVE HARD LID CEILINGS REQUIRING ACCESS.
6. FOR ALL DUCTWORK WHICH PENETRATES THE CORRIDOR WALL AND DOES NOT DIRECTLY SERVE THE CORRIDOR, ENSURE DUCT THICKNESS IS 0.019" AND PROTECT DUCT PENETRATION AS A THROUGH PENETRATION PER 2012 IBC SECTION 714. REFER TO ARCHITECTURAL FOR EXTENT OF CORRIDOR WALLS. PROVIDE COMBINATION FIRE/SMOKE DAMPERS WHERE INDICATED ON PLANS.
7. COORDINATE DUCTWORK ROUTING WITH LIGHTING, STRUCTURAL, CONDUIT, PIPING, AND OTHER TRADES AS REQUIRED TO AVOID CONFLICTS.
8. RETURN AIR OPENINGS INDICATED HAVE BEEN COORDINATED WITH FULL HEIGHT WALLS AS SHOWN ON THE ARCHITECTURAL PLANS TO ENSURE SUFFICIENT RETURN AIR PATHS HAVE BEEN PROVIDED BACK TO THE RTUs. IF ADDITIONAL WALLS ARE EXTENDED FULL HEIGHT TO UNDERSIDE OF ROOF DECK IN ADDITION TO THOSE SHOWN ON THE ARCHITECTURAL PLANS, CONTRACTOR SHALL PROVIDE OPENINGS, AND DAMPERS IF NEEDED, OF SUFFICIENT SIZE AS REQUIRED TO ENSURE ADEQUATE AIRWAY PATHS ARE PROVIDED BACK TO THE RTU'S RETURN AIR OPENING.
9. DIMENSIONS SHOWN FOR SOUNDLINED DUCTWORK ARE INTERIOR DUCT DIMENSIONS. ENLARGE DUCTWORK AS REQUIRED TO ACCOMMODATE SOUNDLINING.
10. PROVIDE LONG RADIUS ELBOWS AT ALL ROUND DUCTWORK. MAINTAIN MEDIUM PRESSURE DUCTWORK BETWEEN RTU AND VAVs AT A CONSTANT ELEVATION TO FURTHEST EXTENT POSSIBLE WITH AS FEW OFFSETS AS NEEDED. ENSURE STRAIGHT RUN OF DUCTWORK IS PROVIDED UPSTREAM OF VAV CONNECTIONS, COORDINATE WITH VAV INSTALLATION REQUIREMENTS.

KEY NOTES

1. 48/18 RETURN AIR OPENING LOCATED IN PLENUM SPACE ABOVE CEILING WITH 1.5-HR COMBINATION FIRE/SMOKE DAMPER. ENSURE VAV-3 DUCTWORK DOES NOT BLOCK OPENING.
2. 4"ø DRYER EXHAUST DOWN TO DRYER AND UP TO GOOSENECK TERMINATION ON ROOF, COORDINATE CURB REQUIREMENTS WITH ARCHITECTURAL. OFFSET DUCT UP TO ROOF IF REQUIRED TO AVOID STRUCTURAL MEMBERS.
3. ANGLE FRONT BLADES DOWN AT A 45 DEGREE ANGLE TOWARDS FLOOR.
4. INSTALL FAN EXPOSED HIGH NEAR UNDERSIDE OF ROOF DECK, COORDINATE WITH LIGHTING TO AVOID CONFLICT.
5. 8"ø DRYER EXHAUST DOWN TO TUMBLE DRYER AND UP TO GOOSENECK TERMINATION ON ROOF, COORDINATE CURB REQUIREMENTS WITH ARCHITECTURAL. OFFSET DUCT UP TO ROOF IF REQUIRED TO AVOID STRUCTURAL MEMBERS. INSTALL EXHAUST DUCT IN ACCORDANCE WITH TUMBLE DRYER'S INSTALLATION REQUIREMENTS.
6. DUCT STATIC PRESSURE SENSOR FOR RTU-1 SUPPLY FAN VFD OPERATION.
7. SOUNDLINED SUPPLY AIR UP TO RTU-1, DUCT SAME SIZE AS UNIT CONNECTION.
8. SOUNDLINED RETURN AIR UP TO RTU-1, DUCT SAME SIZE AS UNIT CONNECTION.
9. 18" WIDE UPTURNED ELBOW, DUCT LENGTH SAME SIZE AS UNIT CONNECTION LENGTH. TERMINATE UPTURNED RETURN AIR ELBOW WITHIN HALLWAY CEILING PLENUM BETWEEN ROOF STRUCTURAL MEMBERS. ENSURE UPTURNED ELBOW OPENING IS MINIMUM OF 14" BELOW BOTTOM OF ROOF DECK ABOVE.
10. BUILDING STATIC PRESSURE SENSOR SERVING RTU-1, LOCATE SENSOR IN CEILING PLENUM AND EXTEND TUBE FROM SENSOR THROUGH CEILING GRID TO DETECT PRESSURE IN SPACE BELOW, TERMINATE TUBING WITH COVER OR ESCUTCHEON AS REQUIRED, COORDINATE WITH ARCHITECTURAL REFLECTED CEILING PLAN AND LIGHTS.

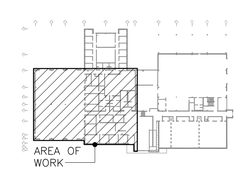

KEYPLAN

STATE OF ALASKA 49TH Timothy C Hickman ME-14669 05/09/18 REGISTERED PROFESSIONAL ENGINEER

Burkhart Croft ARCHITECTS LLC
880 N Street Suite 302 | Anchorage Alaska 99501
T: 907.929.9334 | www.burkhart-croft.com

HZA ENGINEERING SOLUTIONS
HZA Engineering, LLC
113 W. Northern Lights Blvd., Suite 240
Anchorage, Alaska 99503
Tel. (907) 562-1012 Fax (907) 562-1013
AK Corporation # AECL681

MATANUSKA-SUSITNA BOROUGH

MSB FIRE STATION 6-2

WASILLA, ALASKA

DATE:	5/9/2018
DRAWN:	PJB
CHECKED:	TCH
PROJECT:	2017.064.0
DRAWING TITLE:	FIRST FLOOR VENTILATION PLAN - AREA A
REVISIONS:	
SHEET NO:	M3.1

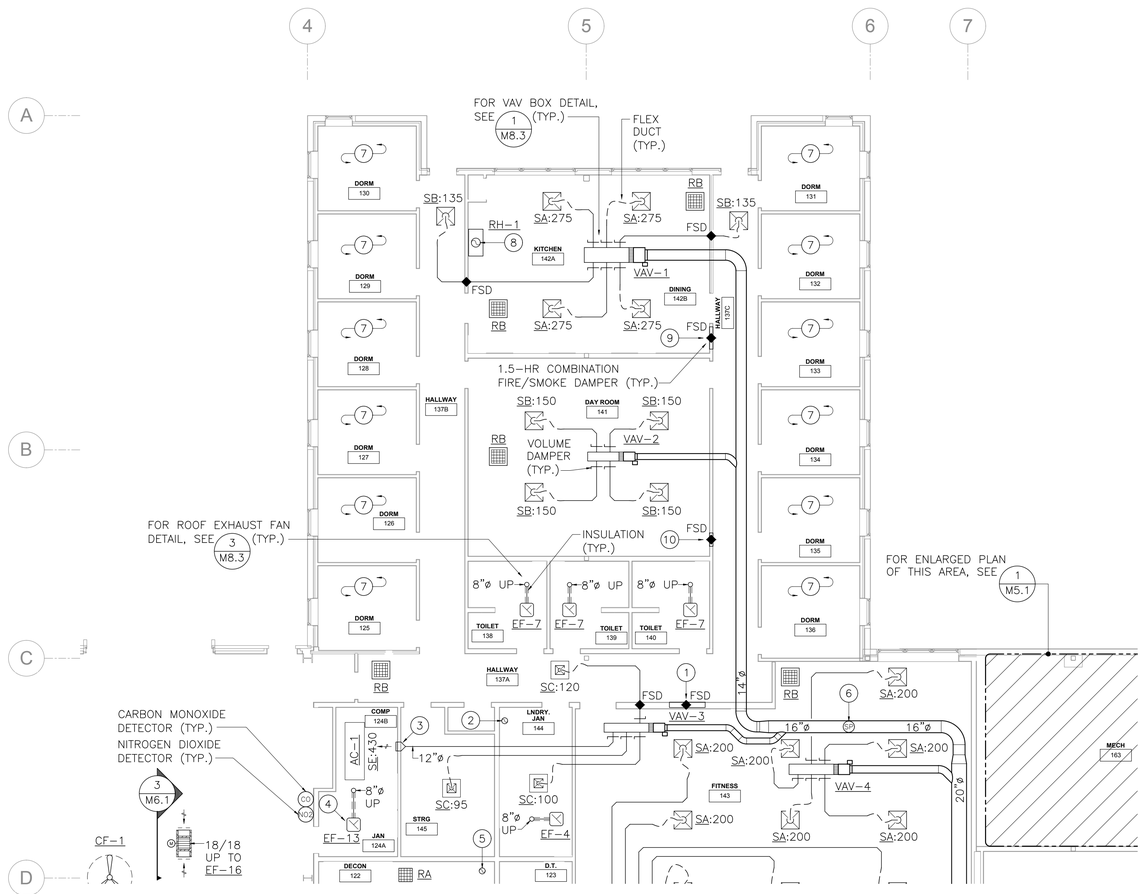

1 M3.2 FIRST FLOOR VENTILATION PLAN - AREA B

SCALE: 1/8" = 1'-0"

SHEET NOTES

1. BRANCH DUCTWORK TO INDIVIDUAL DIFFUSERS SHALL EQUAL THE DIFFUSER NECK SIZE UNLESS OTHERWISE INDICATED.
2. BRANCH DUCTWORK TO INDIVIDUAL VAV BOXES SHALL EQUAL THE VAV BOX CONNECTION SIZE UNLESS OTHERWISE INDICATED.
3. COORDINATE FINAL DIFFUSER AND GRILLE LOCATIONS WITH THE ARCHITECTURAL REFLECTED CEILING PLAN AND LIGHTING.
4. VOLUME DAMPERS LOCATED ABOVE HARD LID CEILINGS SHALL BE PROVIDED WITH REMOTE OPERATORS.
5. PROVIDE ACCESS DOORS AS REQUIRED FOR ALL EQUIPMENT LOCATED ABOVE HARD LID CEILINGS REQUIRING ACCESS.
6. FOR ALL DUCTWORK WHICH PENETRATES THE CORRIDOR WALL AND DOES NOT DIRECTLY SERVE THE CORRIDOR, ENSURE DUCT THICKNESS IS 0.019" AND PROTECT DUCT PENETRATION AS A THROUGH PENETRATION PER 2012 IBC SECTION 714. REFER TO ARCHITECTURAL FOR EXTENT OF CORRIDOR WALLS. PROVIDE COMBINATION FIRE/SMOKE DAMPERS WHERE INDICATED ON PLANS.
7. COORDINATE DUCTWORK ROUTING WITH LIGHTING, STRUCTURAL, CONDUIT, PIPING, AND OTHER TRADES AS REQUIRED TO AVOID CONFLICTS.
8. RETURN AIR OPENINGS INDICATED HAVE BEEN COORDINATED WITH FULL HEIGHT WALLS AS SHOWN ON THE ARCHITECTURAL PLANS TO ENSURE SUFFICIENT RETURN AIR PATHS HAVE BEEN PROVIDED BACK TO THE RTUs. IF ADDITIONAL WALLS ARE EXTENDED FULL HEIGHT TO UNDERSIDE OF ROOF DECK IN ADDITION TO THOSE SHOWN ON THE ARCHITECTURAL PLANS, CONTRACTOR SHALL PROVIDE OPENINGS, AND DAMPERS IF NEEDED, OF SUFFICIENT SIZE AS REQUIRED TO ENSURE ADEQUATE AIRWAY PATHS ARE PROVIDED BACK TO THE RTU'S RETURN AIR OPENING.
9. DIMENSIONS SHOWN FOR SOUNDLINED DUCTWORK ARE INTERIOR DUCT DIMENSIONS. ENLARGE DUCTWORK AS REQUIRED TO ACCOMMODATE SOUNDLINING.
10. PROVIDE LONG RADIUS ELBOWS AT ALL ROUND DUCTWORK. MAINTAIN MEDIUM PRESSURE DUCTWORK BETWEEN RTU AND VAVs AT A CONSTANT ELEVATION TO FURTHEST EXTENT POSSIBLE WITH AS FEW OFFSETS AS NEEDED. ENSURE STRAIGHT RUN OF DUCTWORK IS PROVIDED UPSTREAM OF VAV CONNECTIONS, COORDINATE WITH VAV INSTALLATION REQUIREMENTS.

KEY NOTES

1. 48/18 RETURN AIR OPENING LOCATED IN PLENUM SPACE ABOVE CEILING WITH 1.5-HR COMBINATION FIRE/SMOKE DAMPER. ENSURE VAV-3 DUCTWORK DOES NOT BLOCK OPENING.
2. 4"ø DRYER EXHAUST DOWN TO DRYER AND UP TO GOOSENECK TERMINATION ON ROOF, COORDINATE CURB REQUIREMENTS WITH ARCHITECTURAL. OFFSET DUCT UP TO ROOF IF REQUIRED TO AVOID STRUCTURAL MEMBERS.
3. ANGLE FRONT BLADES DOWN AT A 45 DEGREE ANGLE TOWARDS FLOOR.
4. INSTALL FAN EXPOSED HIGH NEAR UNDERSIDE OF ROOF DECK, COORDINATE WITH LIGHTING TO AVOID CONFLICT.
5. 8"ø DRYER EXHAUST DOWN TO TUMBLE DRYER AND UP TO GOOSENECK TERMINATION ON ROOF, COORDINATE CURB REQUIREMENTS WITH ARCHITECTURAL. OFFSET DUCT UP TO ROOF IF REQUIRED TO AVOID STRUCTURAL MEMBERS. INSTALL EXHAUST DUCT IN ACCORDANCE WITH TUMBLE DRYER'S INSTALLATION REQUIREMENTS.
6. DUCT STATIC PRESSURE SENSOR FOR RTU-1 SUPPLY FAN VFD OPERATION.
7. THIS ROOM IS NATURALLY VENTILATED THROUGH OPERABLE WINDOWS PER IMC AREA REQUIREMENTS.
8. 12"ø RANGE HOOD EXHAUST UP TO ROOF TERMINATION, OFFSET DUCT UP TO ROOF IF REQUIRED TO AVOID STRUCTURAL MEMBERS. INSTALL EXHAUST DUCT IN ACCORDANCE WITH RANGE HOOD MANUFACTURER INSTALLATION REQUIREMENTS.
9. 30/18 RETURN AIR OPENING LOCATED IN PLENUM SPACE ABOVE CEILING WITH 1.5-HR COMBINATION FIRE/SMOKE DAMPER. ENSURE NEARBY DUCTWORK DOES NOT BLOCK OPENING.
10. 18/18 RETURN AIR OPENING LOCATED IN PLENUM SPACE ABOVE CEILING WITH 1.5-HR COMBINATION FIRE/SMOKE DAMPER. ENSURE NEARBY DUCTWORK DOES NOT BLOCK OPENING.

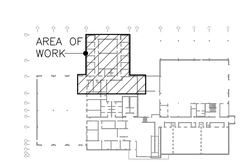

KEYPLAN

STATE OF ALASKA 49TH
Timothy C Hickman
ME-14669
05/09/18
REGISTERED PROFESSIONAL ENGINEER

Burkhart Croft ARCHITECTS LLC
880 N Street Suite 302 | Anchorage Alaska 99501
T: 907.929.9334 | www.burkhart-croft.com

HZA ENGINEERING SOLUTIONS
HZA Engineering, LLC
113 W. Northern Lights Blvd., Suite 240
Anchorage, Alaska 99503
Tel. (907) 562-1012 Fax (907) 562-1013
AK Corporation # AECL581

MATANUSKA-SUSITNA BOROUGH

MSB FIRE STATION 6-2

WASILLA, ALASKA

DATE:	5/9/2018
DRAWN:	PJB
CHECKED:	TCH
PROJECT:	2017.064.0
DRAWING TITLE:	FIRST FLOOR VENTILATION PLAN - AREA B
REVISIONS:	
SHEET NO:	**M3.2**

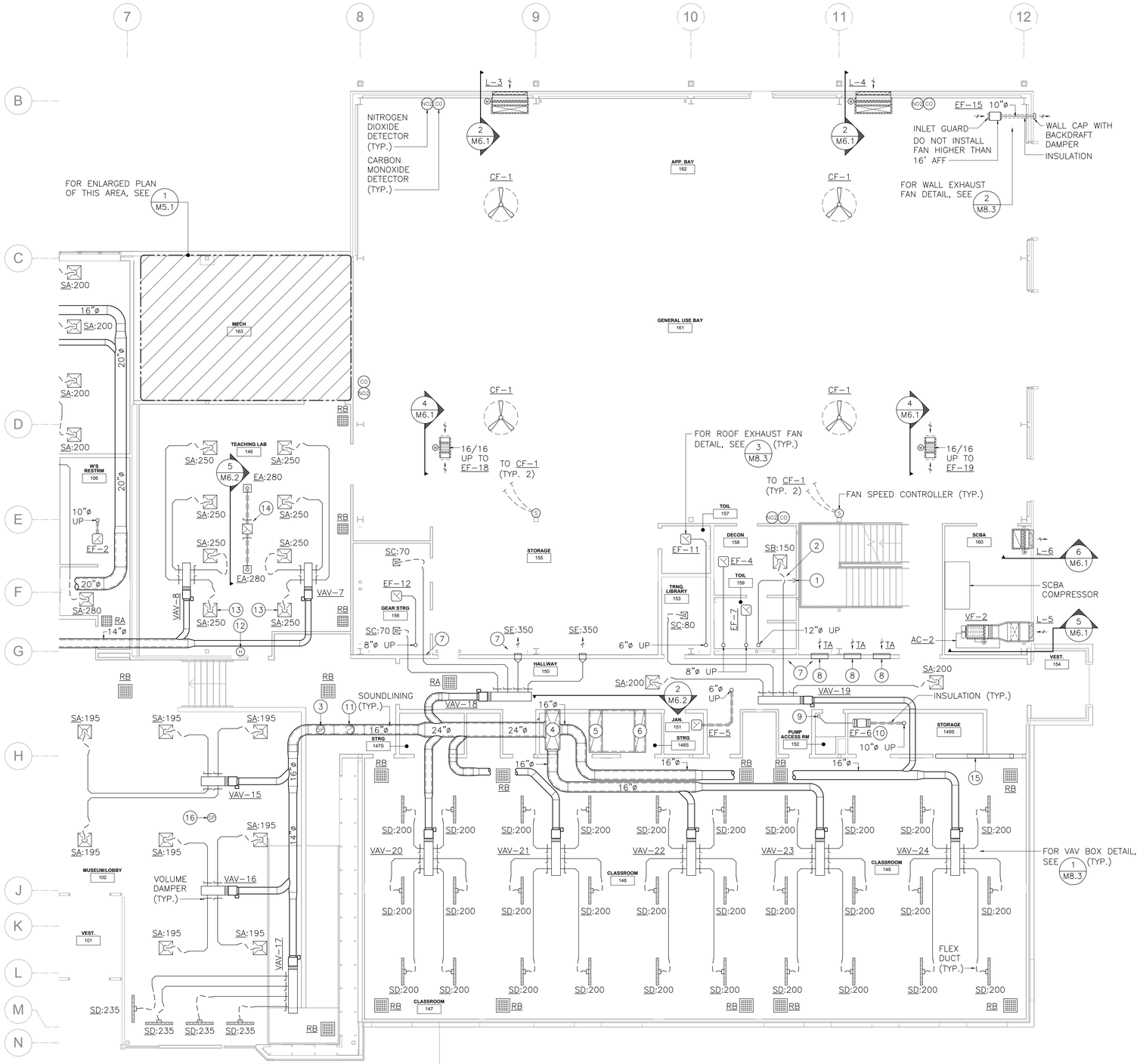

1 M3.3 FIRST FLOOR VENTILATION PLAN - AREA C

SCALE: 1/8" = 1'-0"

SHEET NOTES

1. BRANCH DUCTWORK TO INDIVIDUAL DIFFUSERS SHALL EQUAL THE DIFFUSER NECK SIZE UNLESS OTHERWISE INDICATED.
2. BRANCH DUCTWORK TO INDIVIDUAL VAV BOXES SHALL EQUAL THE VAV BOX CONNECTION SIZE UNLESS OTHERWISE INDICATED.
3. COORDINATE FINAL DIFFUSER AND GRILLE LOCATIONS WITH THE ARCHITECTURAL REFLECTED CEILING PLAN AND LIGHTING.
4. VOLUME DAMPERS LOCATED ABOVE HARD LID CEILINGS SHALL BE PROVIDED WITH REMOTE OPERATORS.
5. PROVIDE ACCESS DOORS AS REQUIRED FOR ALL EQUIPMENT LOCATED ABOVE HARD LID CEILINGS REQUIRING ACCESS.
6. COORDINATE DUCTWORK ROUTING WITH LIGHTING, STRUCTURAL, CONDUIT, PIPING, AND OTHER TRADES AS REQUIRED TO AVOID CONFLICTS.
7. RETURN AIR OPENINGS INDICATED HAVE BEEN COORDINATED WITH FULL HEIGHT WALLS AS SHOWN ON THE ARCHITECTURAL PLANS TO ENSURE SUFFICIENT RETURN AIR PATHS HAVE BEEN PROVIDED BACK TO THE RTUs. IF ADDITIONAL WALLS ARE EXTENDED FULL HEIGHT TO UNDERSIDE OF ROOF DECK IN ADDITION TO THOSE SHOWN ON THE ARCHITECTURAL PLANS, CONTRACTOR SHALL PROVIDE OPENINGS, AND DAMPERS IF NEEDED, OF SUFFICIENT SIZE AS REQUIRED TO ENSURE ADEQUATE AIRWAY PATHS ARE PROVIDED BACK TO THE RTU'S RETURN AIR OPENING.
8. DIMENSIONS SHOWN FOR SOUNDLINED DUCTWORK ARE INTERIOR DUCT DIMENSIONS. ENLARGE DUCTWORK AS REQUIRED TO ACCOMMODATE SOUNDLINING.
9. PROVIDE LONG RADIUS ELBOWS AT ALL ROUND DUCTWORK. MAINTAIN MEDIUM PRESSURE DUCTWORK BETWEEN RTU AND VAVs AT A CONSTANT ELEVATION TO FURTHEST EXTENT POSSIBLE WITH AS FEW OFFSETS AS NEEDED. ENSURE STRAIGHT RUN OF DUCTWORK IS PROVIDED UPSTREAM OF VAV CONNECTIONS, COORDINATE WITH VAV INSTALLATION REQUIREMENTS.

KEY NOTES

1. 12"ø DRYER EXHAUST DOWN TO TUMBLE DRYER. VERIFY INCREASED EXHAUST DUCT SIZE WITH MANUFACTURER DUE TO LENGTH OF EXHAUST DUCT RUN. INSTALL EXHAUST DUCT IN ACCORDANCE WITH TUMBLE DRYER'S INSTALLATION REQUIREMENTS.
2. ROUTE FLEX DUCTWORK UP AND OVER EXHAUST DUCTWORK BETWEEN STRUCTURAL MEMBERS.
3. DUCT STATIC PRESSURE SENSOR FOR RTU-2 SUPPLY FAN VFD OPERATION.
4. SOUNDLINED SUPPLY AIR UP TO RTU-2, DUCT SAME SIZE AS UNIT CONNECTION.
5. SOUNDLINED RETURN AIR UP TO RTU-2, DUCT SAME SIZE AS UNIT CONNECTION.
6. 18" WIDE UPTURNED ELBOW, DUCT LENGTH SAME SIZE AS UNIT CONNECTION LENGTH. TERMINATE UPTURNED RETURN AIR ELBOW WITHIN CEILING PLENUM BETWEEN ROOF STRUCTURAL MEMBERS. ENSURE UPTURNED ELBOW OPENING IS MINIMUM OF 14" BELOW BOTTOM OF ROOF DECK ABOVE.
7. COORDINATE GRILLE/DUCTWORK INSTALLATION IN THIS AREA WITH STRUCTURAL CROSS BRACING AS REQUIRED.
8. MOUNT TA GRILLE HIGH ON WALL, ENSURE HALLWAY SIDE OF OPENING IS LOCATED ABOVE HALLWAY CEILING IN PLENUM SPACE. COORDINATE WITH STRUCTURAL MEMBERS IN THIS AREA TO AVOID CONFLICT.
9. 10"ø DOWN TO PUMP ROOM. COORDINATE DUCT DROP WITH PIPE DROPS IN SAME LOCATION. ENSURE DUCT DOES NOT BLOCK ACCESS TO SHIPS LADDER.
10. FOR INLINE EXHAUST FAN DETAIL, SEE 4/M8.3.
11. COORDINATE DUCT DROP BETWEEN ROOF/CEILING ELEVATION CHANGE WITH ARCHITECTURAL AS REQUIRED. PROVIDE CHASE AROUND DUCTWORK IF NEEDED TO CONCEAL.
12. HUMIDITY SENSOR AND MANUAL ON/OFF SWITCH FOR EF-9.
13. USE REMOVABLE S/A GRILLE FOR ACCESS TO NEARBY VAV CONTROLS AND VALVES OR PROVIDE ACCESS DOOR IN HARD LID CEILING FOR VAV MAINTENANCE AND SERVICE ACCESS.
14. INSULATE ALL EXHAUST DUCTWORK ASSOCIATED WITH EF-9's EXHAUST AIR SYSTEM.
15. 138/18 RETURN AIR OPENING IN FULL HEIGHT WALL ABOVE CEILING IN RETURN AIR PLENUM.
16. BUILDING STATIC PRESSURE SENSOR SERVING RTU-2. LOCATE SENSOR IN CEILING PLENUM AND EXTEND TUBE FROM SENSOR THROUGH CEILING GRID TO DETECT PRESSURE IN SPACE BELOW, TERMINATE TUBING WITH COVER OR ESCUTCHEON AS REQUIRED, COORDINATE WITH ARCHITECTURAL REFLECTED CEILING PLAN AND LIGHTS.

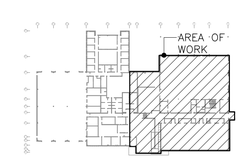

KEYPLAN

STATE OF ALASKA 49TH Timothy C Hickman ME-14669 05/09/18 REGISTERED PROFESSIONAL ENGINEER

Burkhart Croft ARCHITECTS LLC
880 N Street Suite 302 | Anchorage Alaska 99501
T: 907.929.9334 | www.burkhart-croft.com

HZA ENGINEERING SOLUTIONS
HZA Engineering, LLC
113 W. Northern Lights Blvd., Suite 240
Anchorage, Alaska 99503
Tel. (907) 562-1012 Fax (907) 562-1013
AK Corporation # AECL681

MATANUSKA-SUSITNA BOROUGH

MSB FIRE STATION 6-2

WASILLA, ALASKA

DATE:	5/9/2018
DRAWN:	PJB
CHECKED:	TCH
PROJECT:	2017.064.0
DRAWING TITLE:	FIRST FLOOR VENTILATION PLAN - AREA C
REVISIONS:	
SHEET NO:	M3.3

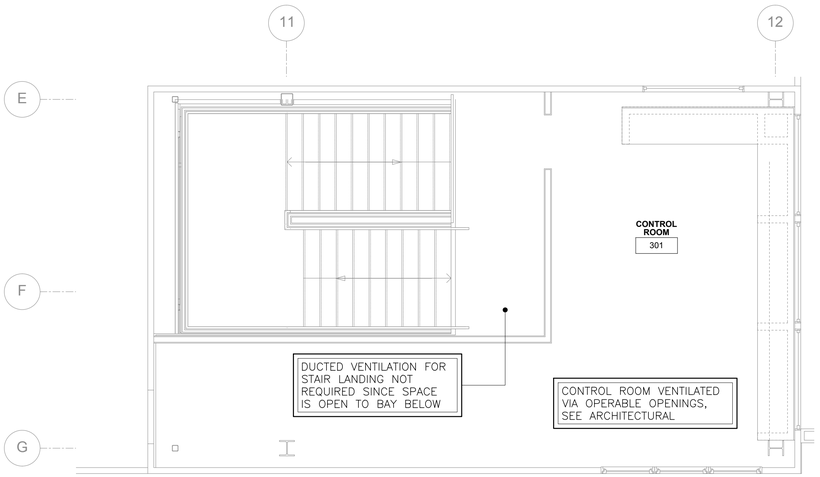

1 M3.4 CONTROL ROOM VENTILATION PLAN

SCALE: 1/4" = 1'-0"

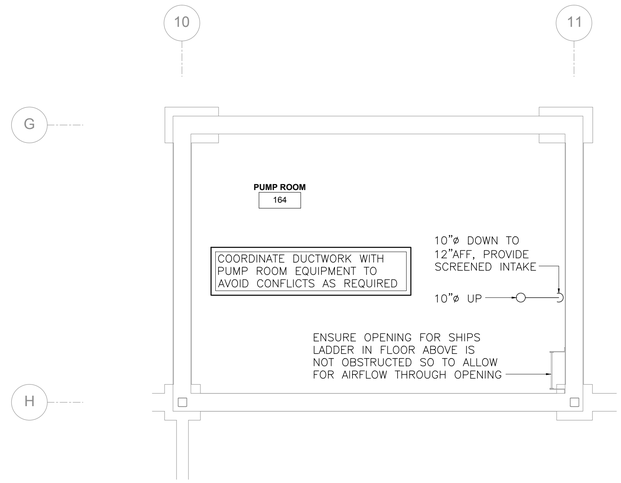

2 M3.4 PUMP ROOM VENTILATION PLAN

SCALE: 1/4" = 1'-0"

SHEET NOTES

1. BRANCH DUCTWORK TO INDIVIDUAL DIFFUSERS SHALL EQUAL THE DIFFUSER NECK SIZE UNLESS OTHERWISE INDICATED.
2. COORDINATE FINAL DIFFUSER AND GRILLE LOCATIONS WITH THE ARCHITECTURAL REFLECTED CEILING PLAN AND LIGHTING.
3. VOLUME DAMPERS LOCATED ABOVE HARD LID CEILINGS SHALL BE PROVIDED WITH REMOTE OPERATORS.
4. PROVIDE ACCESS DOORS AS REQUIRED FOR ALL EQUIPMENT LOCATED ABOVE HARD LID CEILINGS REQUIRING ACCESS.
5. COORDINATE DUCTWORK ROUTING WITH LIGHTING, STRUCTURAL, CONDUIT, PIPING, AND OTHER TRADES AS REQUIRED TO AVOID CONFLICTS.

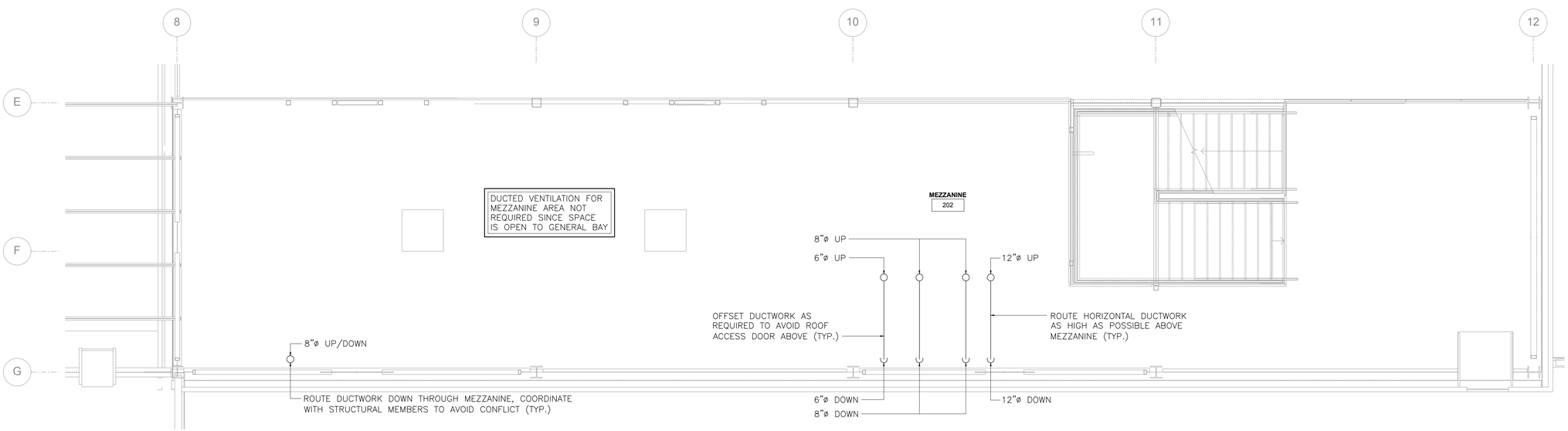

3 M3.4 MEZZANINE VENTILATION PLAN

SCALE: 1/4" = 1'-0"

STATE OF ALASKA
49 TH
Timothy C Hickman
ME-14669
05/09/18
REGISTERED PROFESSIONAL ENGINEER

Burkhart Croft
ARCHITECTS LLC
880 N Street Suite 302 | Anchorage Alaska 99501
T: 907.929.9334 | www.burkhart-croft.com

HZA
ENGINEERING SOLUTIONS
HZA Engineering, LLC
113 W. Northern Lights Blvd., Suite 240
Anchorage, Alaska 99503
Tel. (907) 562-1012 Fax (907) 562-1013
AK Corporation # AECL081

MATANUSKA-SUSITNA BOROUGH

MSB FIRE STATION 6-2

WASILLA, ALASKA

DATE:	5/9/2018
DRAWN:	PJB
CHECKED:	TCH
PROJECT:	2017.064.0
DRAWING TITLE:	MEZZANINE, CONTROL, AND PUMP ROOM VENTILATION PLANS
REVISIONS:	
SHEET NO:	M3.4

SHEET NOTES

1. COORDINATE ALL ROOF PENETRATIONS WITH STRUCTURAL MEMBERS.
2. ENSURE ALL EXHAUST TERMINATIONS AND VENT THROUGH ROOFS ARE SUFFICIENT DISTANCE AWAY FROM GUH COMBUSTION AIR INTAKES AS REQUIRED PER IMC.
3. DO NOT INSTALL ANY PIECE OF ROOF MOUNTED EQUIPMENT WITHIN 10' OF ROOF EDGE.
4. COORDINATE ROOF PENETRATIONS WITH ROOF WALKWAY PADS. ENSURE PIPE/DUCT ROOF PENETRATIONS DO NOT PENETRATE A PAD.

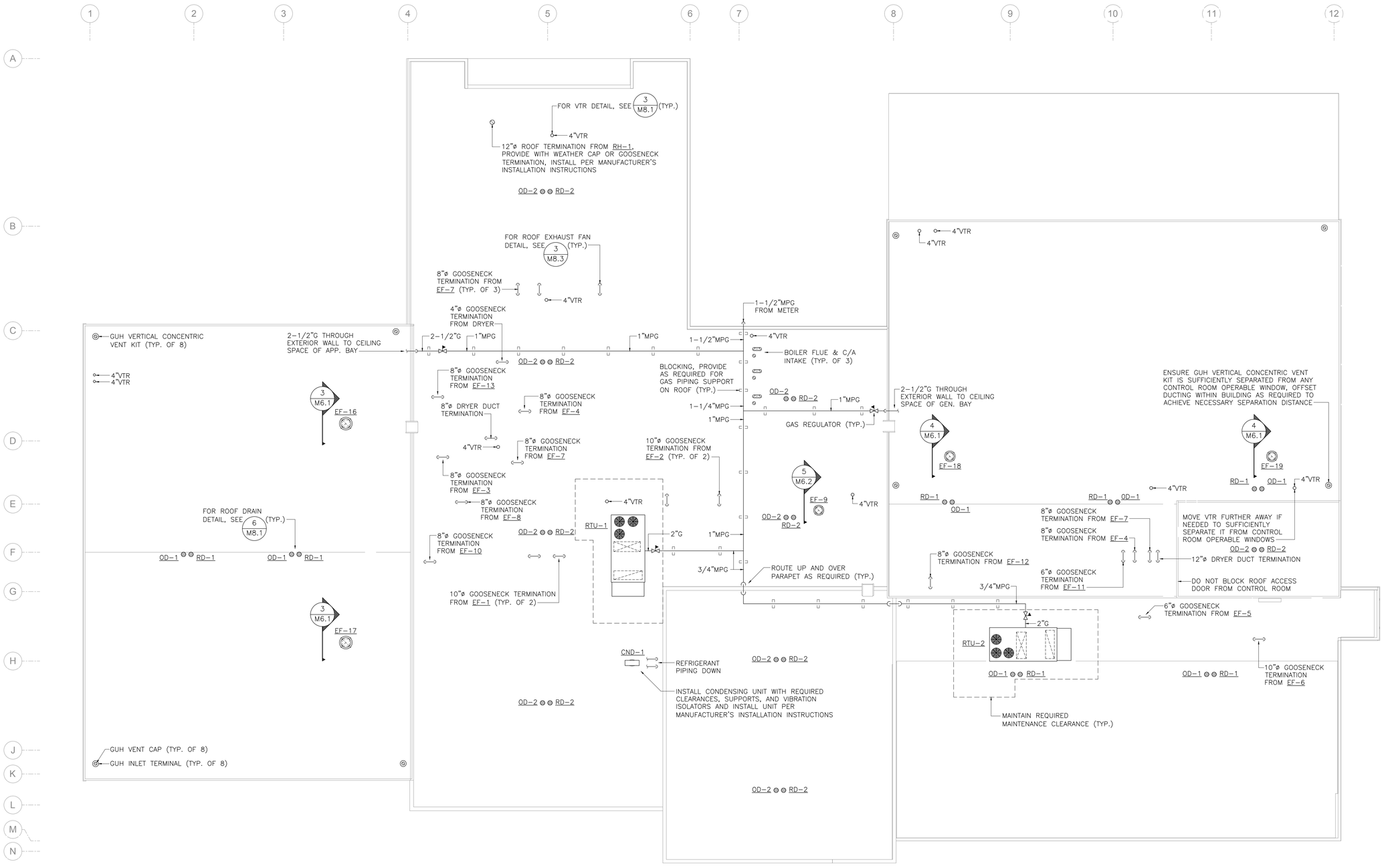

1 / M4.1 MECHANICAL ROOF PLAN

SCALE: 3/32" = 1'-0"

STATE OF ALASKA 49TH Timothy C Hickman ME-14669 05/09/18 REGISTERED PROFESSIONAL ENGINEER

Burkhart Croft ARCHITECTS LLC
880 N Street Suite 302 | Anchorage Alaska 99501
T: 907.929.9334 | www.burkhart-croft.com

HZA ENGINEERING SOLUTIONS
HZA Engineering, LLC
113 W. Northern Lights Blvd., Suite 240
Anchorage, Alaska 99503
Tel. (907) 562-1012 Fax (907) 562-1013
AK Corporation # AECL681

MATANUSKA-SUSITNA BOROUGH

MSB FIRE STATION 6-2

WASILLA, ALASKA

DATE:	5/9/2018
DRAWN:	MS
CHECKED:	TCH
PROJECT:	2017.064.0
DRAWING TITLE:	MECHANICAL ROOF PLAN
REVISIONS:	
SHEET NO:	**M4.1**

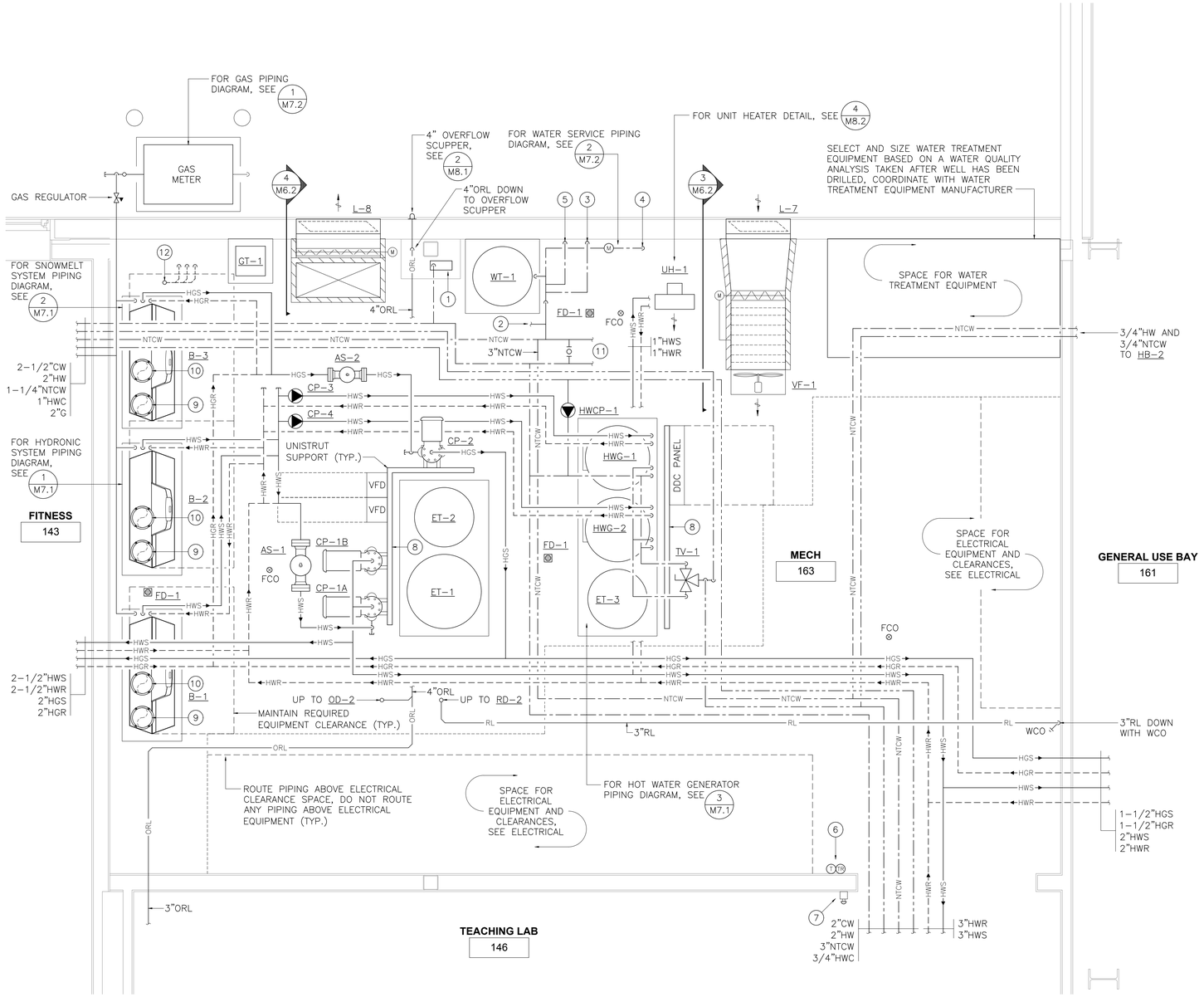

1 / M5.1 ENLARGED MECHANICAL ROOM PLAN

SCALE: 1/2" = 1'-0"

SHEET NOTES

1. BRANCH PIPING TO INDIVIDUAL TERMINAL HEATING UNITS SHALL BE 3/4" UNLESS OTHERWISE INDICATED.
2. DO NOT ROUTE ANY PIPING IN EXTERIOR WALL ASSEMBLIES.
3. PROVIDE ACCESS DOORS OF APPROPRIATE SIZE AS REQUIRED TO ALL EQUIPMENT AND VALVES LOCATED ABOVE HARD LID CEILINGS OR WITHIN WALLS REQUIRING PERMANENT ACCESS.
4. INSTALL THERMOSTATS/SENSORS ON WALLS AT APPROXIMATE LOCATIONS INDICATED AFTER INSTALLATION OF EQUIPMENT. COORDINATE FINAL LOCATION AS REQUIRED SO THAT EQUIPMENT DOES NOT COVER OR BLOCK ACCESS TO THERMOSTATS/SENSORS. DO NOT INSTALL ANY THERMOSTATS/SENSORS BEHIND DOORS.
5. ROUTE PIPING IN CEILING SPACE AS HIGH AS POSSIBLE AND THROUGH STRUCTURAL MEMBERS WHERE OPEN WEB TRUSSES ARE AVAILABLE, COORDINATE PIPE ROUTING WITH DUCTWORK AND OTHER TRADES AS REQUIRED TO AVOID CONFLICT.
6. PAINT ALL EXPOSED GAS PIPING ON EXTERIOR OF BUILDING THAT IS VISIBLE FROM GRADE, COLOR PER ARCHITECT.

KEY NOTES

1. 1/2"CW TO BATTERY POWERED TRAP PRIMER, SEE 5/M8.1.
2. 3/4"CW FOR BUILDING HEAT BOILERS MAKE-UP WATER.
3. 1-1/4"CW DOWN TO IRRIGATION SYSTEM.
4. 3"CW SERVICE DOWN.
5. 3"CW DOWN TO SERVE EXISTING 6-2 FACILITY.
6. REVERSE ACTING THERMOSTAT FOR VF-1 AND ASSOCIATED CONTROL DAMPERS OPERATION. THERMOSTAT FOR UH-1 OPERATION.
7. EMERGENCY BOILER SHUTDOWN SWITCH, INSTALL PER ASME CSD-1. PROVIDE SHUTDOWN SWITCH WITH A BREAK GLASS TYPE SWITCH ENCLOSURE TO PREVENT UNWANTED TAMPERING.
8. PROVIDE UNISTRUT SUPPORT ASSEMBLY FOR EQUIPMENT MOUNTING AND FASTENING. SECURE SUPPORT ASSEMBLY TO BUILDING STRUCTURE AS REQUIRED.
9. BOILER VENT UP THROUGH ROOF, INSTALL PER MANUFACTURER'S INSTALLATION INSTRUCTIONS
10. BOILER C/A UP THROUGH ROOF, INSTALL PER MANUFACTURER'S INSTALLATION INSTRUCTIONS.
11. COLD WATER PIPING TO/FROM WATER TREATMENT EQUIPMENT, SEE 2/M7.2.
12. THREE EACH 1-1/2"V's FROM FLOOR DRAINS. COMBINE INTO 2"V AND ROUTE 2"V TO 4"VTR. FOR VTR DETAIL, SEE 3/M8.1.

STATE OF ALASKA 49TH
Timothy C Hickman
ME-14669
05/09/18
REGISTERED PROFESSIONAL ENGINEER

Burkhart Croft ARCHITECTS LLC
880 N Street Suite 302 | Anchorage Alaska 99501
T: 907.929.9334 | www.burkhart-croft.com

HZA ENGINEERING SOLUTIONS
HZA Engineering, LLC
113 W. Northern Lights Blvd., Suite 240
Anchorage, Alaska 99503
Tel. (907) 562-1012 Fax (907) 562-1013
AK Corporation # AECL881

MATANUSKA-SUSITNA BOROUGH

MSB FIRE STATION 6-2

WASILLA, ALASKA

DATE:	5/9/2018
DRAWN:	MS
CHECKED:	TCH
PROJECT:	2017.064.0
DRAWING TITLE:	MECHANICAL ROOM PLAN
REVISIONS:	
SHEET NO:	M5.1

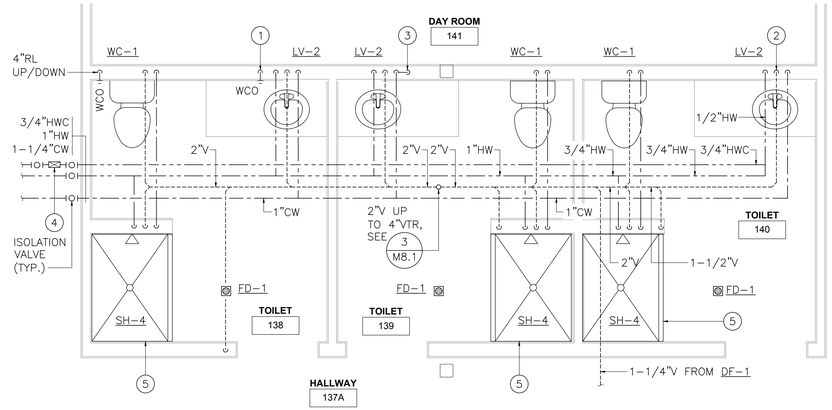

1 M5.2 ENLARGED PLUMBING PLAN

SCALE: 3/8" = 1'-0"

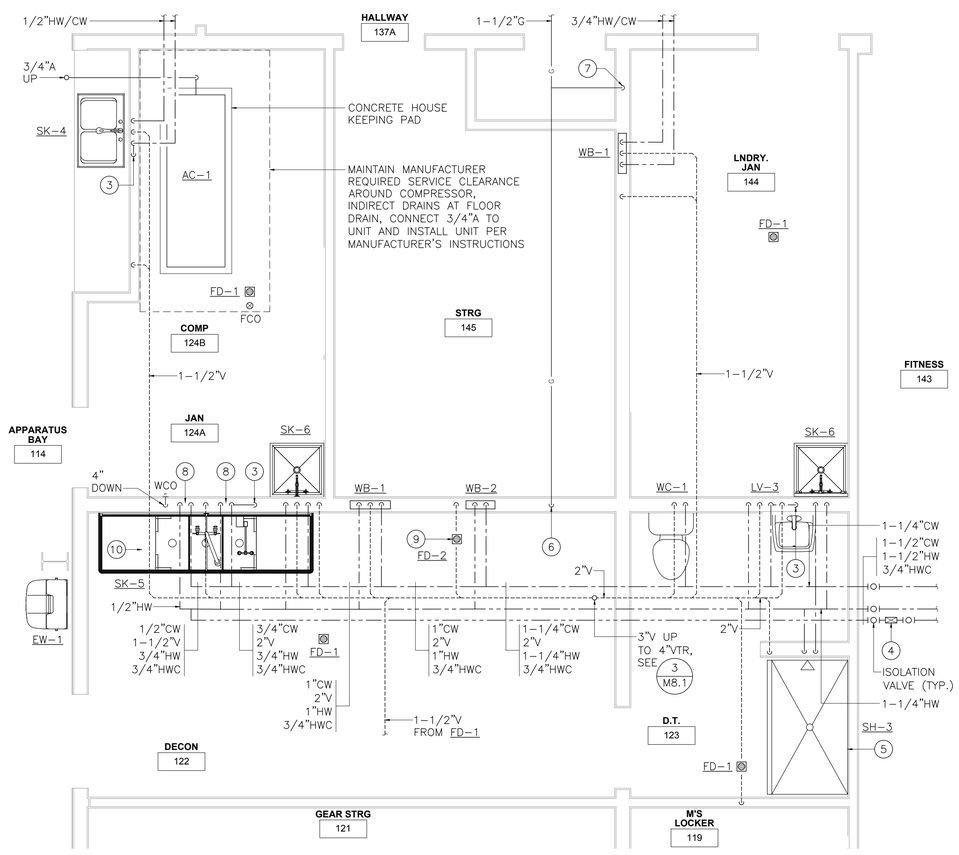

2 M5.2 ENLARGED PLUMBING PLAN

SCALE: 3/8" = 1'-0"

SHEET NOTES

1. BRANCH PIPING TO INDIVIDUAL PLUMBING FIXTURES SHALL EQUAL THE SIZE REQUIRED BY THE PLUMBING FIXTURES SCHEDULE UNLESS OTHERWISE INDICATED.
2. PROVIDE CLEANOUTS ON ALL INDIVIDUAL SINK, LAVATORY, AND DRINKING FOUNTAIN RISERS.
3. DO NOT ROUTE ANY PIPING IN EXTERIOR WALLS UNLESS OTHERWISE INDICATED
4. PROVIDE SHOCK-TROL DEVICES AT EACH FIXTURE.
5. COORDINATE EXACT LOCATIONS OF ALL FLOOR DRAINS, FLOOR CLEANOUTS, AND FLOOR SINKS WITH ARCHITECTURAL, FURNISHINGS, AND EQUIPMENT AS REQUIRED TO AVOID CONFLICTS.

KEY NOTES

1. 4"W DOWN. LOCATE 4" WCO WITHIN CABINETRY, COORDINATE WITH ARCHITECTURAL.
2. PROVIDE LV-2 WITH 3" RISER CLEANOUT.
3. 1/2"CW TO TRAP PRIMER CONNECTION, SEE 5/M8.1.
4. BALANCE VALVE, SET TO 0.5 GPM. PROVIDE ISOLATION VALVES ON BOTH SIDES OF BALANCE VALVE. LOCATE VALVES SO THEY ARE ACCESSIBLE FROM GRID CEILING OF ADJACENT SPACE.
5. COORDINATE SHOWER ENCLOSURE WITH ARCHITECTURAL TO ENSURE PROPER FIT IN SPACE ALLOTTED. COORDINATE WITH SLAB WORK TO RECESS SHOWER ENCLOSURE INTO SLAB IF REQUIRED BY MANUFACTURER FOR PROPER INSTALLATION OR TO PROVIDE AN ADA COMPLIANT INSTALLATION.
6. 1-1/4"G DOWN WALL TO TUMBLE DRYER, PROVIDE WITH SHUTOFF VALVE AND FLEXIBLE CONNECTION, REDUCE 1-1/4"G DOWN TO APPLIANCE CONNECTION SIZE DOWNSTREAM OF SHUTOFF VALVE.
7. 3/4"G DOWN WALL TO DRYER, PROVIDE WITH SHUTOFF VALVE AND FLEXIBLE CONNECTION, REDUCE 3/4"G TO APPLIANCE CONNECTION SIZE DOWNSTREAM OF SHUTOFF VALVE.
8. 1/2"CW/HW TO 1 OF 2 FAUCETS SERVING SK-5, CENTER FAUCET BETWEEN BOWLS.
9. INSTALL FLOOR DRAIN IN CONCRETE SUMP, COORDINATE EXACT LOCATION WITH STRUCTURAL AS REQUIRED. INDIRECT WASTE FROM EXTRACTOR INTO SUMP.
10. PROVIDE BRANCH PIPING TO HAWS 7610 THERMOSTATIC MIXING VALVE LOCATED AT SK-5 FROM NEAREST 1/2"CW/HW SERVING ONE OF THE TWO FAUCETS AT SK-5. MOUNT AND INSTALL THERMOSTATIC MIXING VALVE AND EYE/FACE WASH PER MANUFACTURER'S INSTALLATION INSTRUCTIONS.

STATE OF ALASKA
49 TH
Timothy C Hickman
ME-14669
05/09/18
REGISTERED PROFESSIONAL ENGINEER

Burkhart Croft
ARCHITECTS LLC
880 N Street Suite 302 | Anchorage Alaska 99501
T: 907.929.9334 | www.burkhart-croft.com

HZA
ENGINEERING SOLUTIONS
HZA Engineering, LLC
113 W. Northern Lights Blvd., Suite 240
Anchorage, Alaska 99503
Tel. (907) 562-1012 Fax (907) 562-1013
AK Corporation # AECL681

MATANUSKA-SUSITNA BOROUGH

MSB FIRE STATION 6-2

WASILLA, ALASKA

DATE:	5/9/2018
DRAWN:	MS
CHECKED:	TCH
PROJECT:	2017.064.0
DRAWING TITLE:	ENLARGED PLUMBING PLANS
REVISIONS:	
SHEET NO:	M5.2

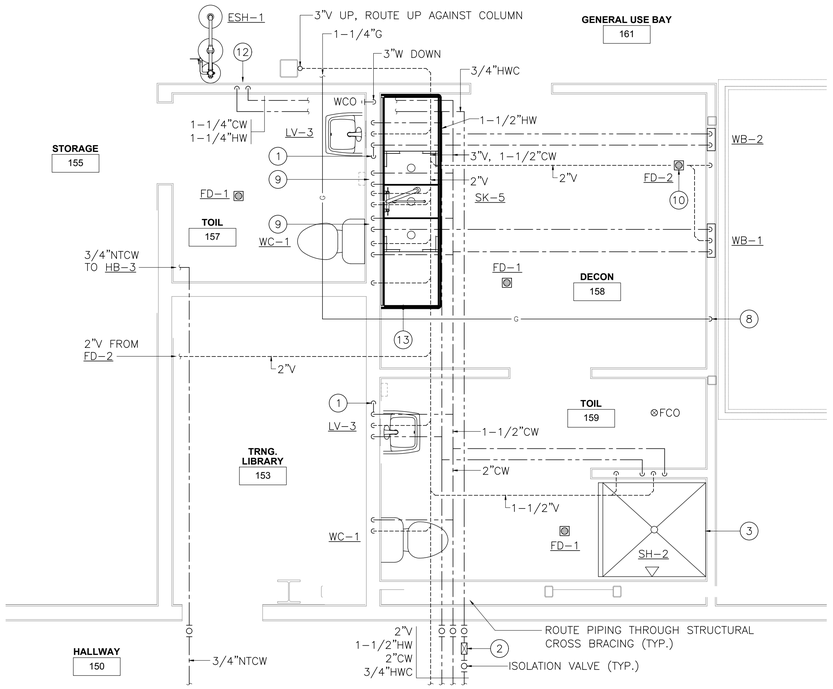

1 M5.3 ENLARGED PLUMBING PLAN

SCALE: 3/8" = 1'-0"

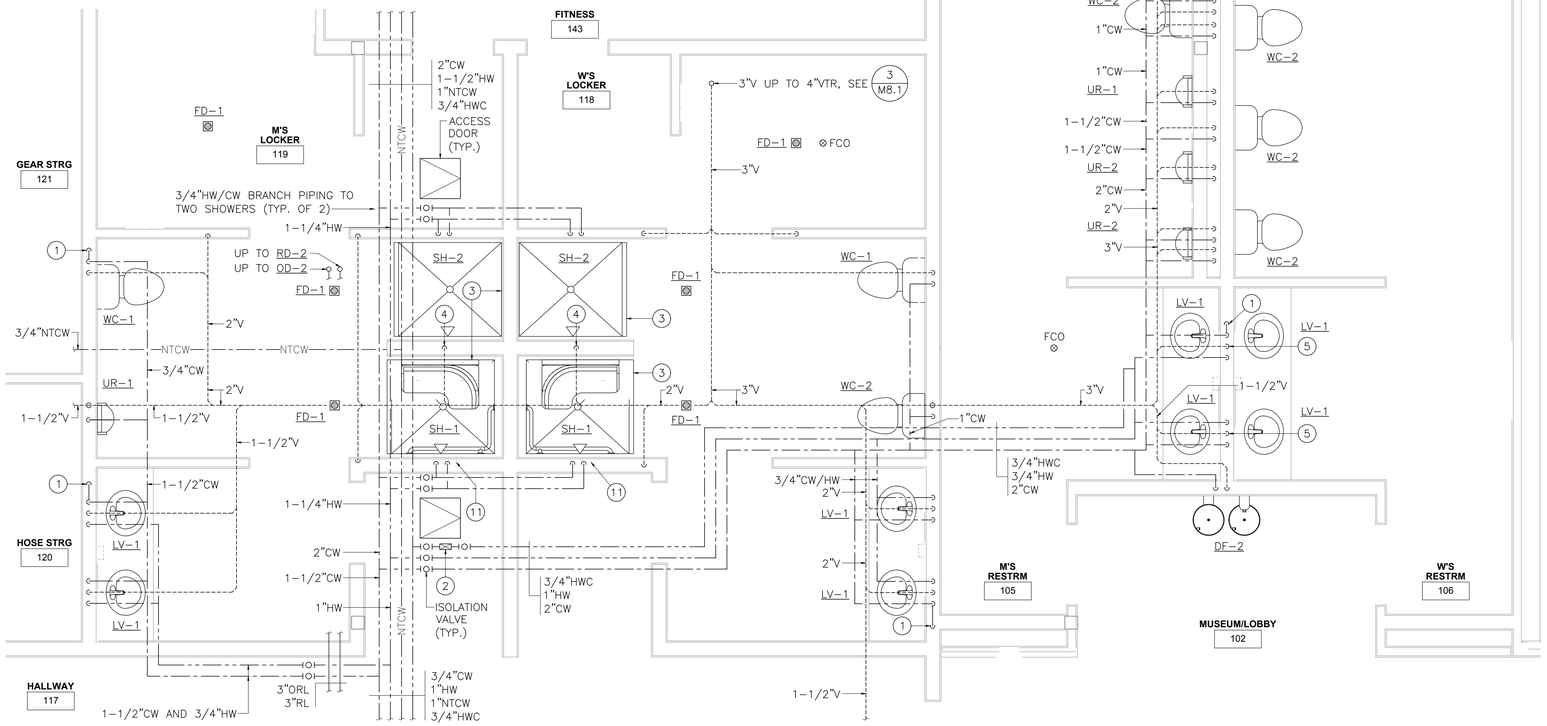

2 M5.3 ENLARGED PLUMBING PLAN

SCALE: 3/8" = 1'-0"

SHEET NOTES

1. BRANCH PIPING TO INDIVIDUAL PLUMBING FIXTURES SHALL EQUAL THE SIZE REQUIRED BY THE PLUMBING FIXTURES SCHEDULE UNLESS OTHERWISE INDICATED.
2. PROVIDE CLEANOUTS ON ALL INDIVIDUAL SINK, LAVATORY, AND DRINKING FOUNTAIN RISERS.
3. DO NOT ROUTE ANY PIPING IN EXTERIOR WALLS UNLESS OTHERWISE INDICATED
4. PROVIDE SHOCK-TROL DEVICES AT EACH FIXTURE.
5. COORDINATE EXACT LOCATIONS OF ALL FLOOR DRAINS, FLOOR CLEANOUTS, AND FLOOR SINKS WITH ARCHITECTURAL, FURNISHINGS, AND EQUIPMENT AS REQUIRED TO AVOID CONFLICTS.

KEY NOTES

1. 1/2"CW TO TRAP PRIMER CONNECTION, SEE 5/M8.1.
2. BALANCE VALVE, SET TO 0.5 GPM. PROVIDE ISOLATION VALVES ON BOTH SIDES OF BALANCE VALVE. LOCATE VALVES SUCH THAT THEY ARE ACCESSIBLE THROUGH ACCESS DOOR OR GRID CEILING.
3. COORDINATE SHOWER ENCLOSURE WITH ARCHITECTURAL TO ENSURE PROPER FIT IN SPACE ALLOTTED. COORDINATE WITH SLAB WORK TO RECESS SHOWER ENCLOSURE INTO SLAB IF REQUIRED BY MANUFACTURER FOR PROPER INSTALLATION OR TO PROVIDE AN ADA COMPLIANT INSTALLATION.
4. 1-1/2"V SERVING BACK-TO-BACK SHOWERS.
5. 3/4"CW, 3/4"HW, AND 1-1/2"V DOWN TO BACK-TO-BACK LAVATORIES.
6. 1-1/2"V SERVING FLOOR DRAINS.
7. 1"CW AND 2"V SERVING BACK-TO-BACK TOILETS.
8. 1-1/4"G DOWN WALL TO TUMBLE DRYER, PROVIDE WITH SHUTOFF VALVE AND FLEXIBLE CONNECTION, REDUCE 1-1/4"G DOWN TO APPLIANCE CONNECTION SIZE DOWNSTREAM OF SHUTOFF VALVE.
9. 1/2"CW/HW TO 1 OF 2 FAUCETS SERVING SK-5, CENTER FAUCET BETWEEN BOWLS.
10. INSTALL FLOOR DRAIN IN CONCRETE SUMP, COORDINATE EXACT LOCATION WITH STRUCTURAL AS REQUIRED. INDIRECT WASTE FROM EXTRACTOR INTO SUMP.
11. LOCATE SHOWER VALVE WITHIN SHOWER UNIT SUCH THAT SHOWER VALVE LOCATION IS ADA COMPLIANT.
12. 1-1/4"CW/HW TO ESH-1 THERMOSTATIC MIXING VALVE. CONNECT ESH-1 AND ASSOCIATED MIXING VALVE PER MANUFACTURER'S INSTALLATION INSTRUCTIONS.
13. PROVIDE BRANCH PIPING TO HAWS 7610 THERMOSTATIC MIXING VALVE LOCATED AT SK-5 FROM NEAREST 1/2"CW/HW SERVING ONE OF THE TWO FAUCETS AT SK-5. MOUNT AND INSTALL THERMOSTATIC MIXING VALVE AND EYE/FACE WASH PER MANUFACTURER'S INSTALLATION INSTRUCTIONS.

STATE OF ALASKA 49TH Timothy C Hickman ME-14669 05/09/18 REGISTERED PROFESSIONAL ENGINEER

Burkhart Croft ARCHITECTS LLC
880 N Street Suite 302 | Anchorage Alaska 99501
T: 907.929.9334 | www.burkhart-croft.com

HZA ENGINEERING SOLUTIONS
HZA Engineering, LLC
113 W. Northern Lights Blvd., Suite 240
Anchorage, Alaska 99503
Tel. (907) 562-1012 Fax (907) 562-1013
AK Corporation # AECL881

MATANUSKA-SUSITNA BOROUGH

MSB FIRE STATION 6-2

WASILLA, ALASKA

DATE:	5/9/2018
DRAWN:	MS
CHECKED:	TCH
PROJECT:	2017.064.0
DRAWING TITLE:	ENLARGED PLUMBING PLANS
REVISIONS:	
SHEET NO:	**M5.3**

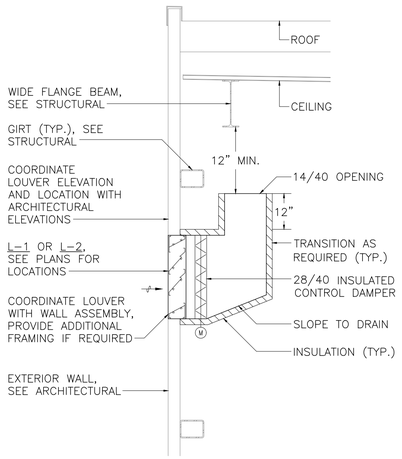

1 M6.1 L-1/L-2 INTAKE AIR ASSEMBLY SECTION

SCALE: NONE

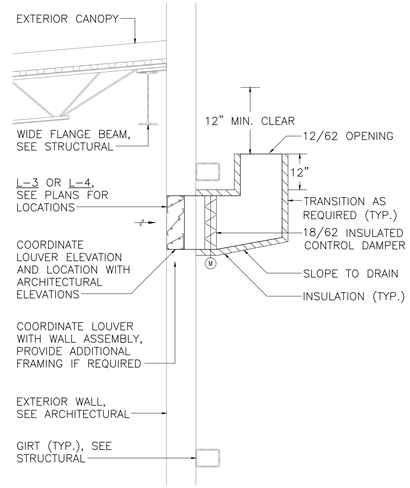

2 M6.1 L-3/L-4 INTAKE AIR ASSEMBLY SECTION

SCALE: NONE

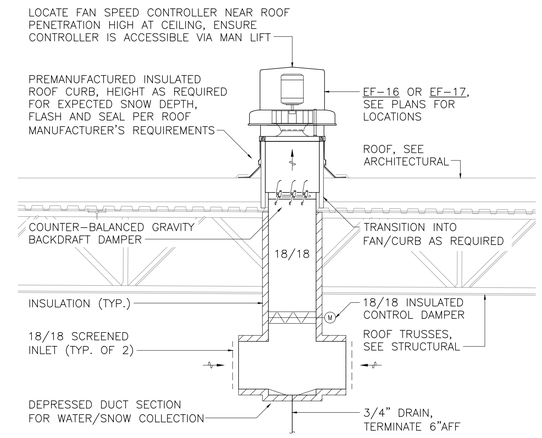

3 M6.1 EF-16/EF-17 EXHAUST AIR ASSEMBLY SECTION

SCALE: NONE

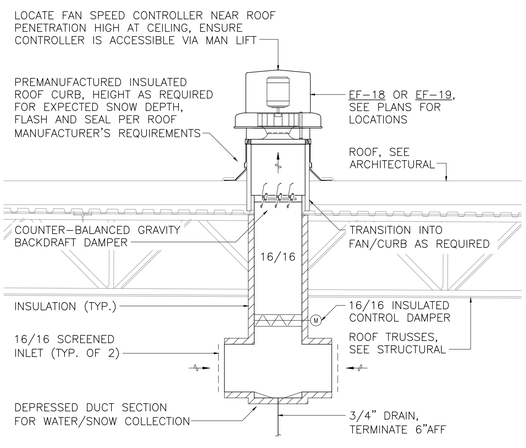

4 M6.1 EF-18/EF-19 EXHAUST AIR ASSEMBLY SECTION

SCALE: NONE

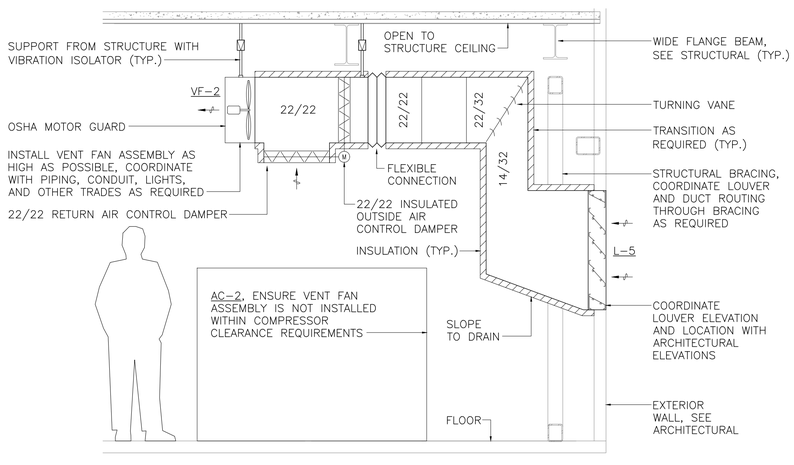

5 M6.1 VF-2 INTAKE AIR ASSEMBLY SECTION

SCALE: NONE

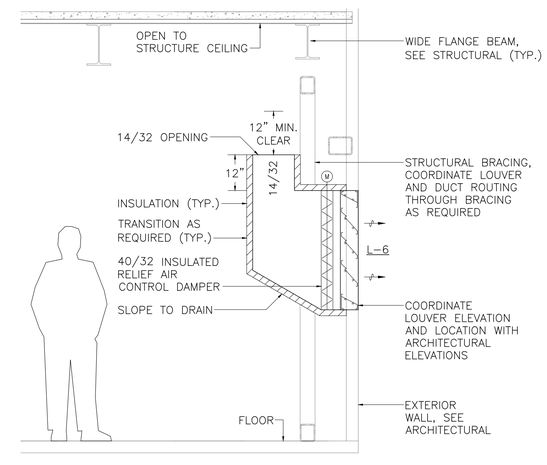

6 M6.1 VF-2 RELIEF AIR ASSEMBLY SECTION

SCALE: NONE

STATE OF ALASKA 49TH
Timothy C Hickman
ME-14669
05/09/18
REGISTERED PROFESSIONAL ENGINEER

Burkhart Croft ARCHITECTS LLC
880 N Street Suite 302 | Anchorage Alaska 99501
T: 907.929.9334 | www.burkhart-croft.com

HZA ENGINEERING SOLUTIONS
HZA Engineering, LLC
113 W. Northern Lights Blvd., Suite 240
Anchorage, Alaska 99503
Tel. (907) 562-1012 Fax (907) 562-1013
AK Corporation # AECL081

MATANUSKA-SUSITNA BOROUGH

MSB FIRE STATION 6-2

WASILLA, ALASKA

DATE:	5/9/2018
DRAWN:	LRJ
CHECKED:	TCH
PROJECT:	2017.064.0
DRAWING TITLE:	MECHANICAL SECTIONS
REVISIONS:	
SHEET NO:	**M6.1**

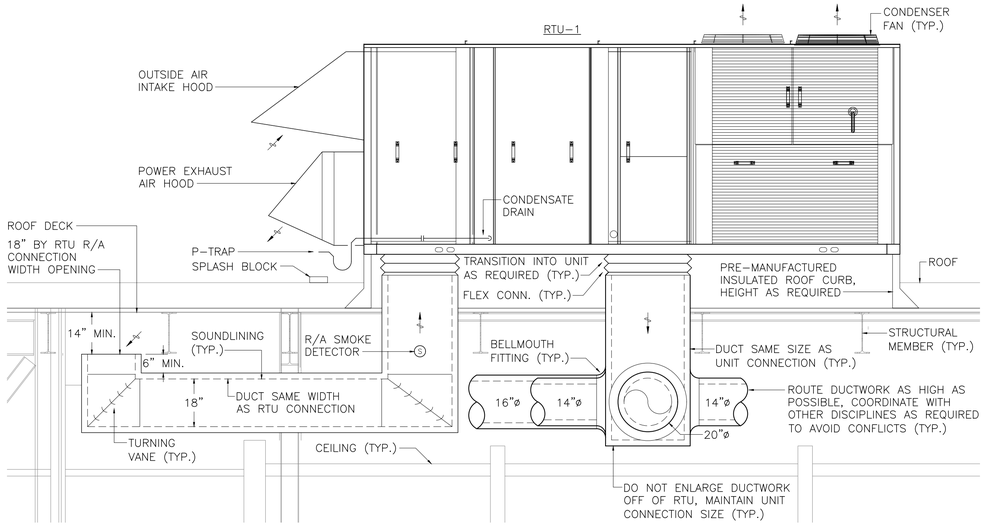

1 M6.2 RTU-1 SECTION

SCALE: NONE

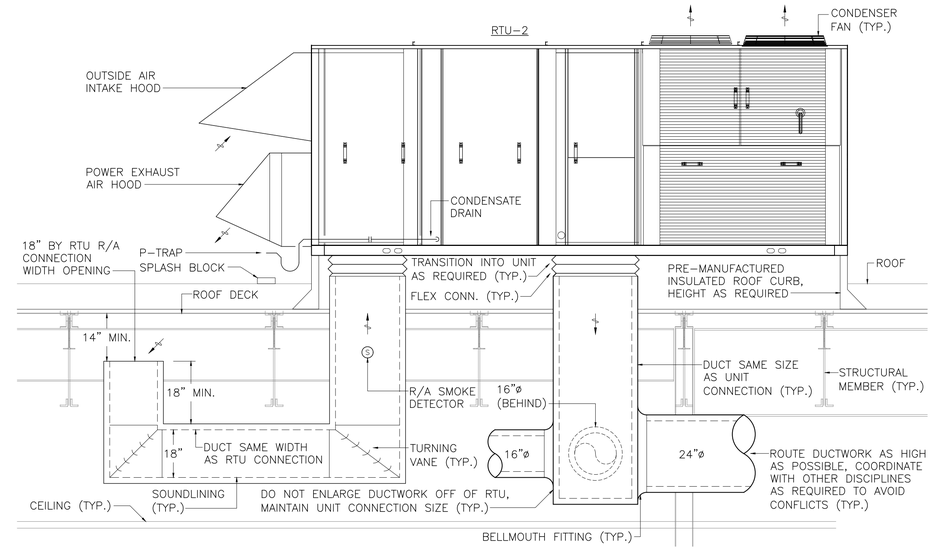

2 M6.2 RTU-2 SECTION

SCALE: NONE

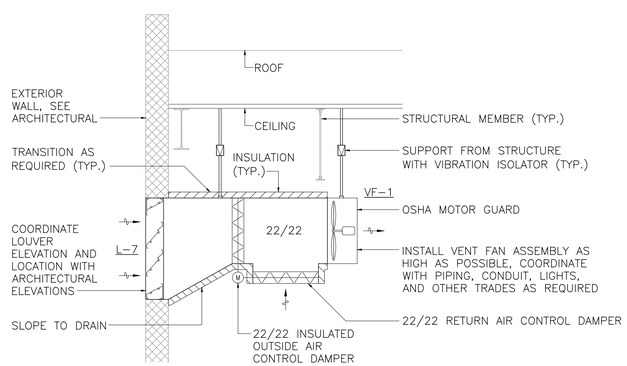

3 M6.2 VF-1 INTAKE AIR ASSEMBLY SECTION

SCALE: NONE

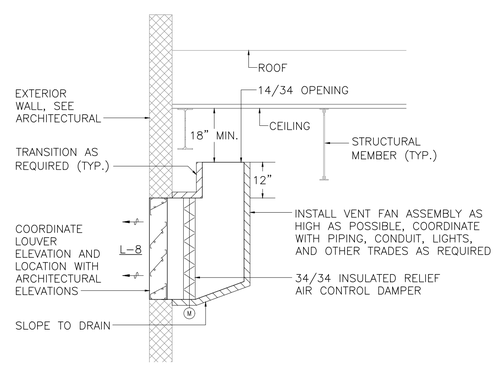

4 M6.2 VF-1 RELIEF AIR ASSEMBLY SECTION

SCALE: NONE

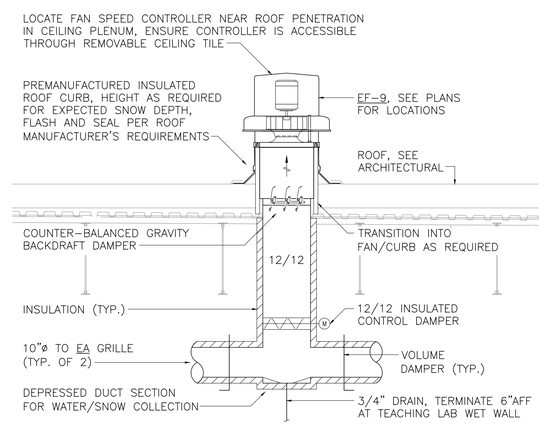

5 M6.2 EF-9 EXHAUST AIR ASSEMBLY SECTION

SCALE: NONE

STATE OF ALASKA 49TH Timothy C Hickman ME-14669 05/09/18 REGISTERED PROFESSIONAL ENGINEER

Burkhart Croft ARCHITECTS LLC
880 N Street Suite 302 | Anchorage Alaska 99501
T: 907.929.9334 | www.burkhart-croft.com

HZA ENGINEERING SOLUTIONS
HZA Engineering, LLC
113 W. Northern Lights Blvd., Suite 240
Anchorage, Alaska 99503
Tel. (907) 562-1012 Fax (907) 562-1013
AK Corporation # AECL881

MATANUSKA-SUSITNA BOROUGH

MSB FIRE STATION 6-2

WASILLA, ALASKA

DATE:	5/9/2018
DRAWN:	LRJ
CHECKED:	TCH
PROJECT:	2017.064.0
DRAWING TITLE:	MECHANICAL SECTIONS
REVISIONS:	
SHEET NO:	**M6.2**

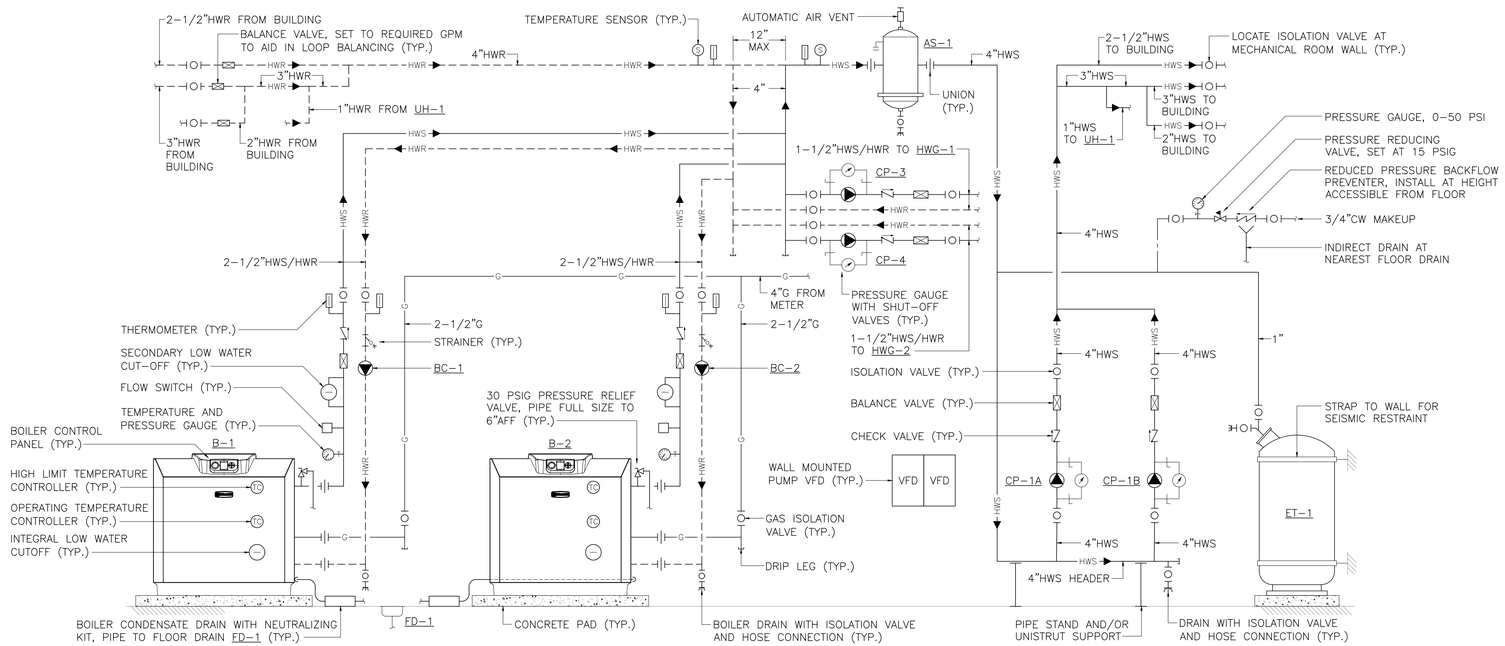

1 M7.1 HYDRONIC SYSTEM PIPING DIAGRAM

SCALE: NONE

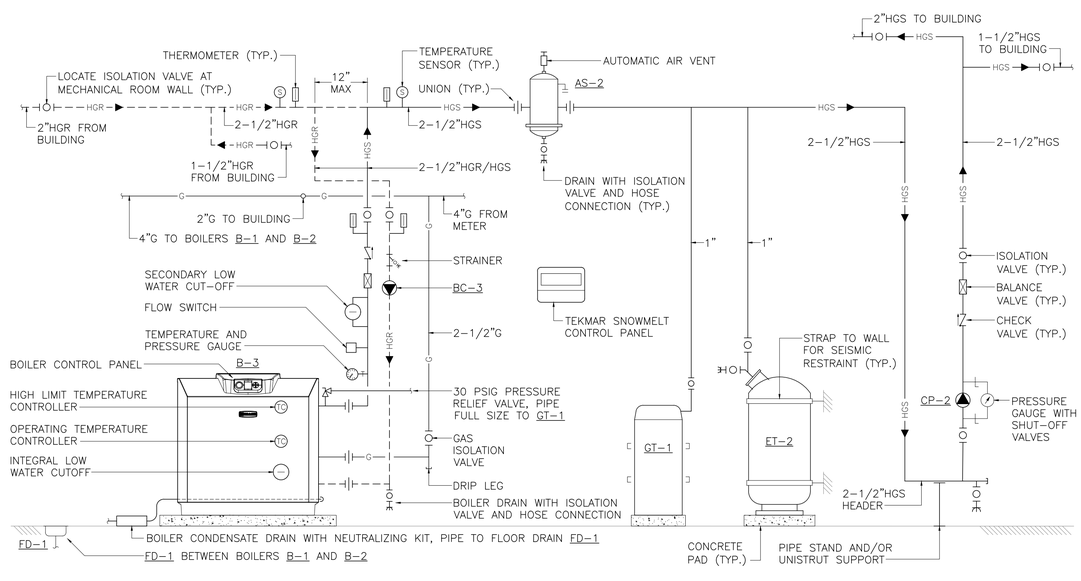

2 M7.1 SNOWMELT SYSTEM PIPING DIAGRAM

SCALE: NONE

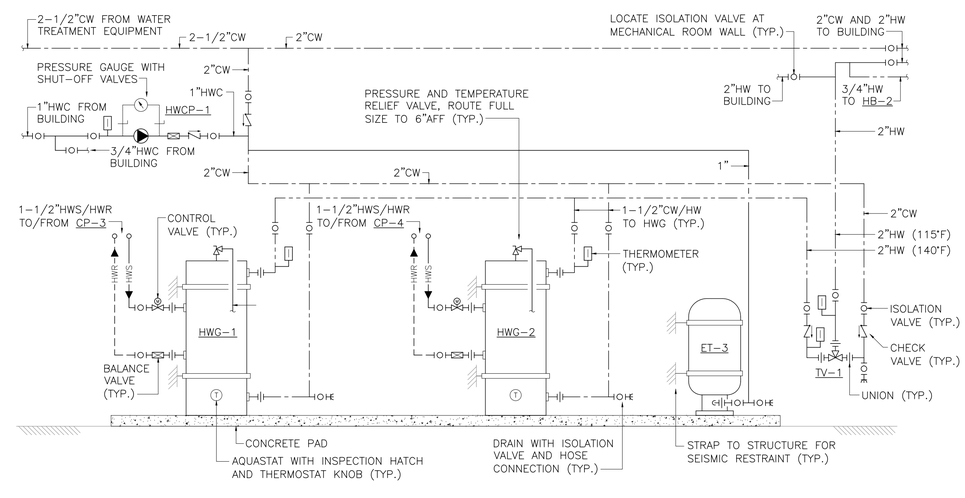

3 M7.1 HOT WATER GENERATOR PIPING DIAGRAM

SCALE: NONE

STATE OF ALASKA 49TH
Timothy C Hickman
ME-14669
05/09/18
REGISTERED PROFESSIONAL ENGINEER

Burkhart Croft ARCHITECTS LLC
880 N Street Suite 302 | Anchorage Alaska 99501
T: 907.929.9334 | www.burkhart-croft.com

HZA ENGINEERING SOLUTIONS
HZA Engineering, LLC
113 W. Northern Lights Blvd., Suite 240
Anchorage, Alaska 99503
Tel. (907) 562-1012 Fax (907) 562-1013
AK Corporation # AECL881

MATANUSKA-SUSITNA BOROUGH

MSB FIRE STATION 6-2

WASILLA, ALASKA

DATE:	5/9/2018
DRAWN:	LRJ
CHECKED:	TCH
PROJECT:	2017.064.0
DRAWING TITLE:	MECHANICAL DIAGRAMS
REVISIONS:	
SHEET NO:	M7.1

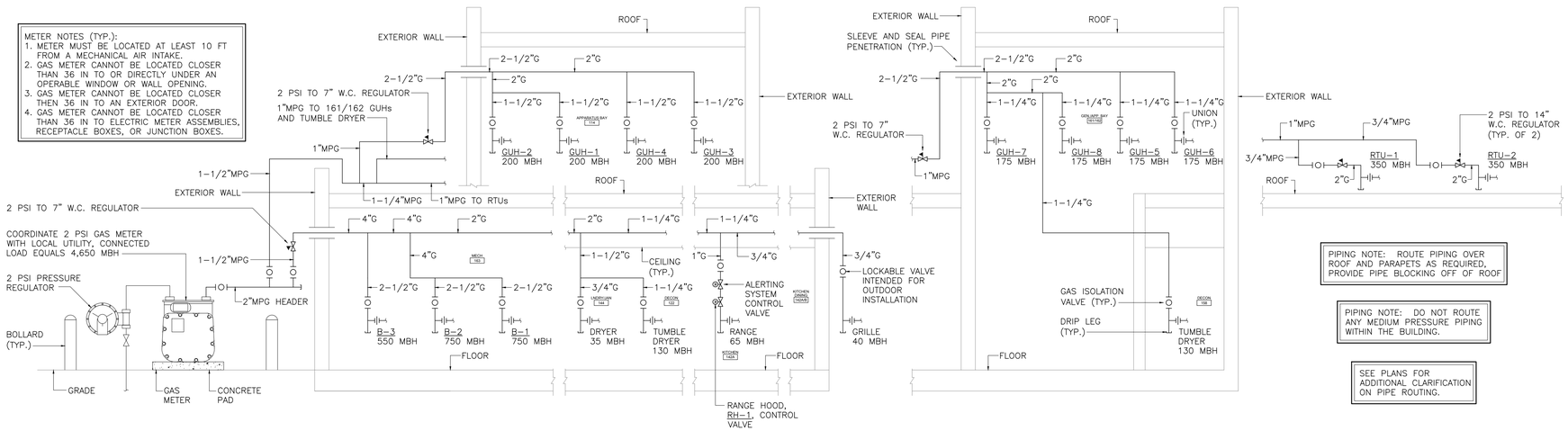

1 M7.2 GAS PIPING DIAGRAM

SCALE: NONE

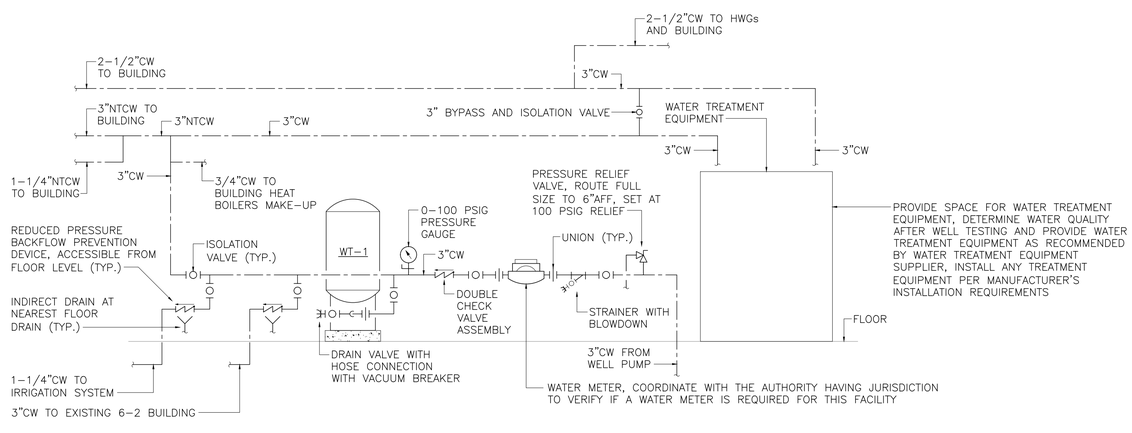

2 M7.2 WATER SERVICE PIPING DIAGRAM

SCALE: NONE

STATE OF ALASKA 49TH
Timothy C Hickman
ME-14669
05/09/18
REGISTERED PROFESSIONAL ENGINEER

Burkhart Croft ARCHITECTS LLC
880 N Street Suite 302 | Anchorage Alaska 99501
T: 907.929.9334 | www.burkhart-croft.com

HZA ENGINEERING SOLUTIONS
HZA Engineering, LLC
113 W. Northern Lights Blvd., Suite 240
Anchorage, Alaska 99503
Tel. (907) 562-1012 Fax (907) 562-1013
AK Corporation # AECL081

MATANUSKA-SUSITNA BOROUGH

MSB FIRE STATION 6-2

WASILLA, ALASKA

DATE:	5/9/2018
DRAWN:	LRJ
CHECKED:	TCH
PROJECT:	2017.064.0
DRAWING TITLE:	MECHANICAL DIAGRAMS
REVISIONS:	
SHEET NO:	**M7.2**

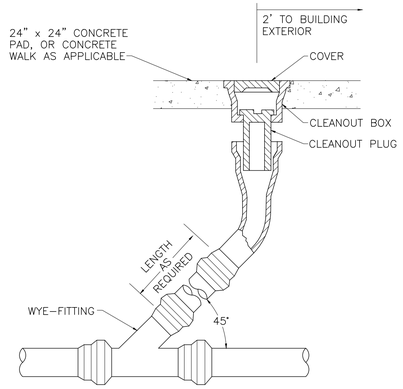

1 M8.1 YARD CLEANOUT DETAIL
SCALE: NONE

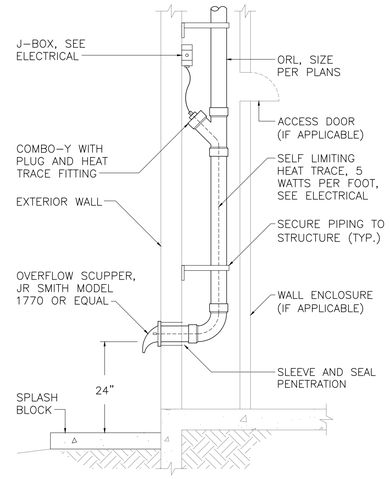

2 M8.1 OVERFLOW SCUPPER DETAIL
SCALE: NONE

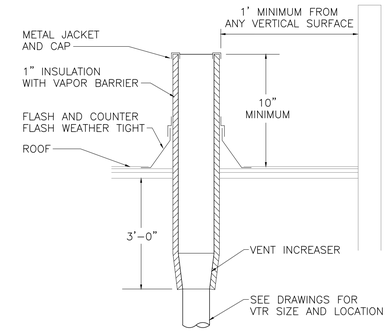

3 M8.1 VENT THROUGH ROOF DETAIL
SCALE: NONE

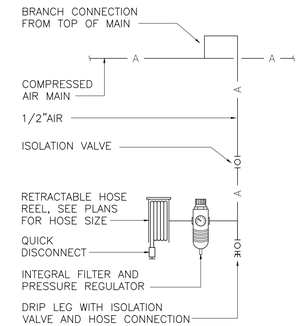

4 M8.1 COMP. AIR CONNECTION DETAIL
SCALE: NONE

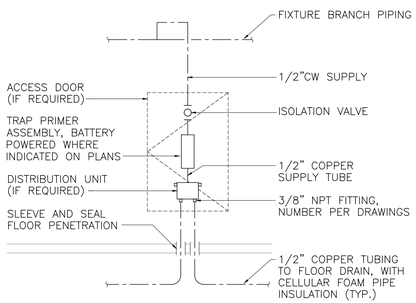

5 M8.1 TRAP PRIMER DETAIL
SCALE: NONE

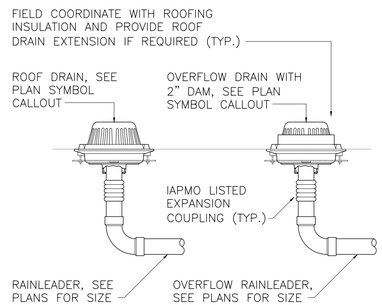

6 M8.1 ROOF DRAIN DETAIL
SCALE: NONE

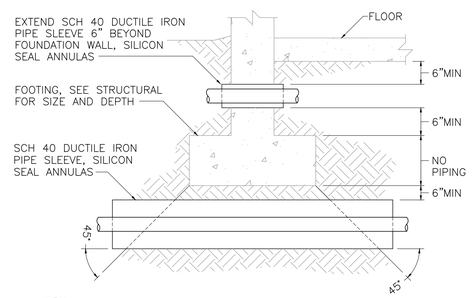

7 M8.1 PIPING AT FOUNDATION DETAIL
SCALE: NONE

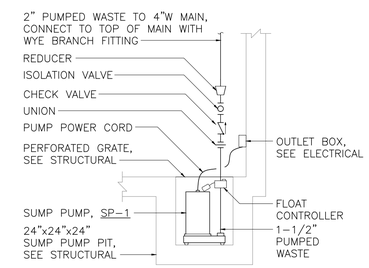

8 M8.1 SUMP PUMP DETAIL
SCALE: NONE

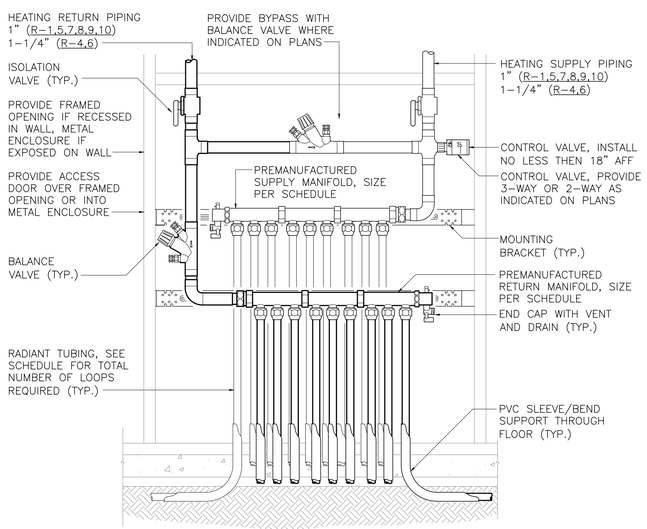

9 M8.1 RADIANT MANIFOLD DETAIL
SCALE: NONE

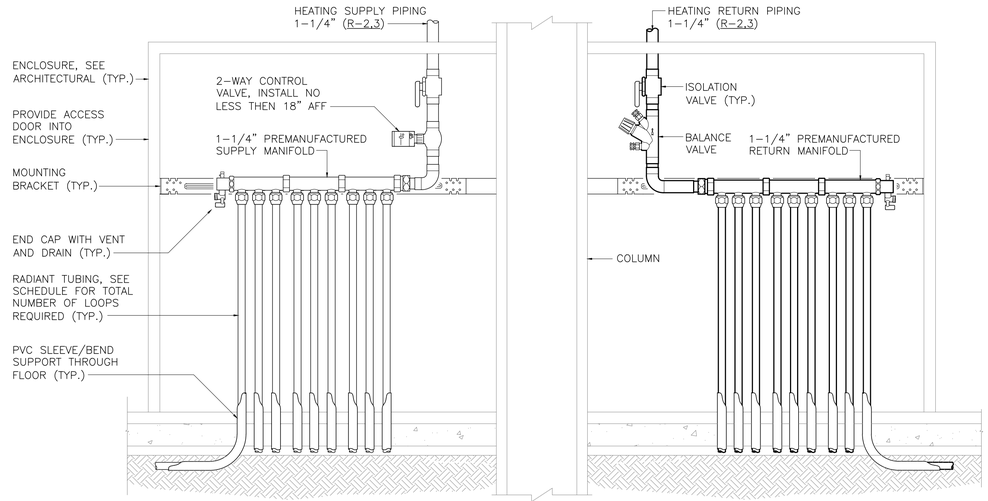

10 M8.1 RADIANT MANIFOLD AT COLUMN DETAIL
SCALE: NONE

STATE OF ALASKA 49TH Timothy C Hickman ME-14669 05/09/18 REGISTERED PROFESSIONAL ENGINEER

Burkhart Croft ARCHITECTS LLC
880 N Street Suite 302 | Anchorage Alaska 99501
T: 907.929.9334 | www.burkhart-croft.com

HZA ENGINEERING SOLUTIONS
HZA Engineering, LLC
113 W. Northern Lights Blvd., Suite 240
Anchorage, Alaska 99503
Tel. (907) 562-1012 Fax (907) 562-1013
AK Corporation # AECL681

MATANUSKA-SUSITNA BOROUGH

MSB FIRE STATION 6-2

WASILLA, ALASKA

DATE:	5/9/2018
DRAWN:	LRJ
CHECKED:	TCH
PROJECT:	2017.064.0
DRAWING TITLE:	MECHANICAL DETAILS
REVISIONS:	
SHEET NO:	M8.1

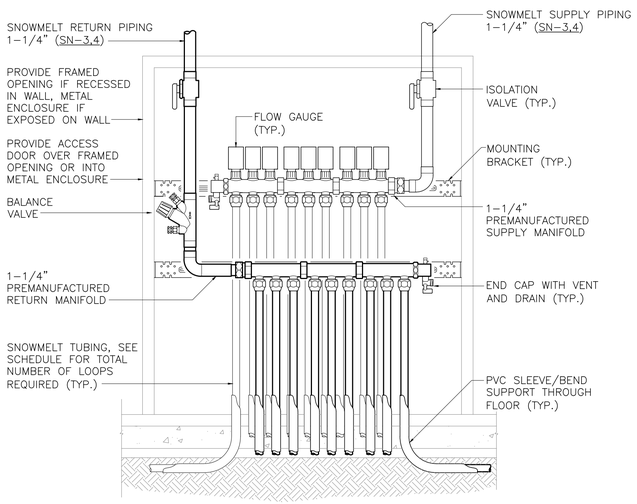

1 M8.2 SNOWMELT MANIFOLD DETAIL

SCALE: NONE

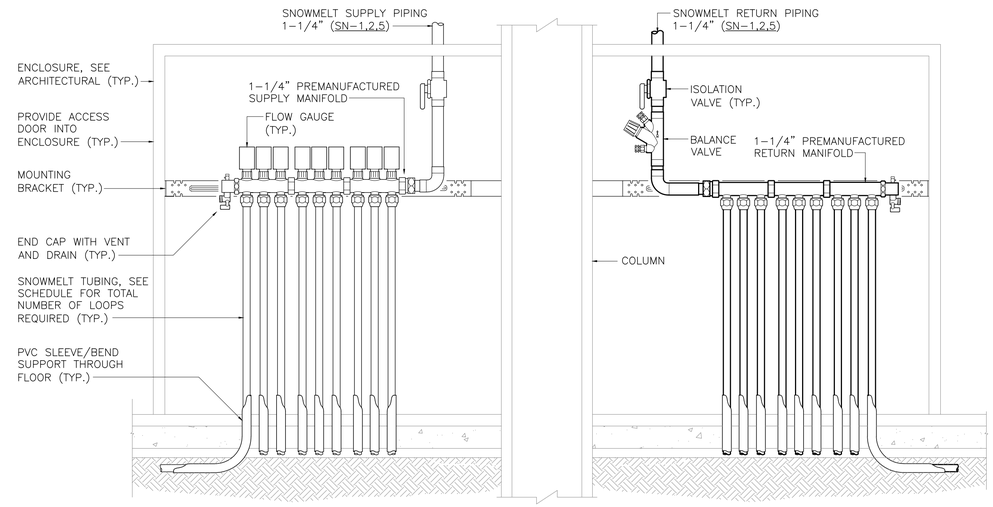

2 M8.2 SNOWMELT MANIFOLD AT COLUMN DETAIL

SCALE: NONE

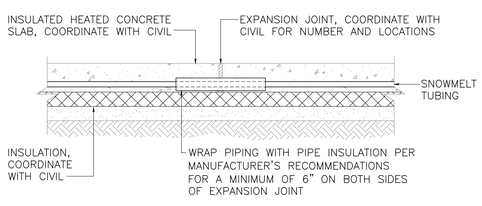

3 M8.2 SNOWMELT JOINT DETAIL

SCALE: NONE

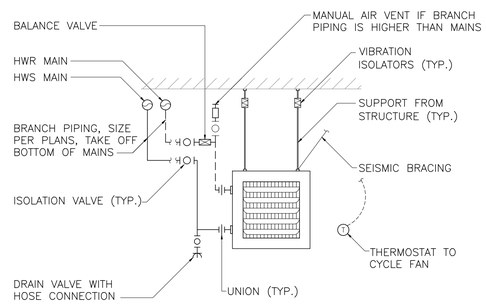

4 M8.2 UNIT HEATER DETAIL

SCALE: NONE

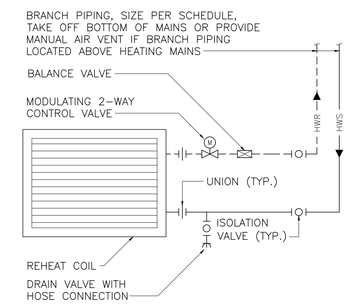

5 M8.2 2-WAY VAV COIL DETAIL

SCALE: NONE

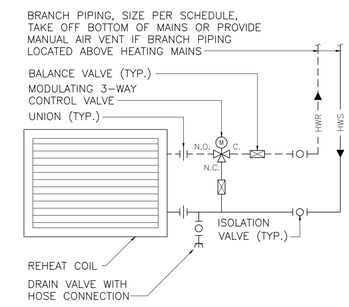

6 M8.2 3-WAY VAV COIL DETAIL

SCALE: NONE

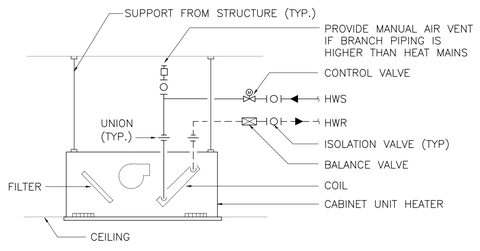

7 M8.2 CEILING CUH DETAIL

SCALE: NONE

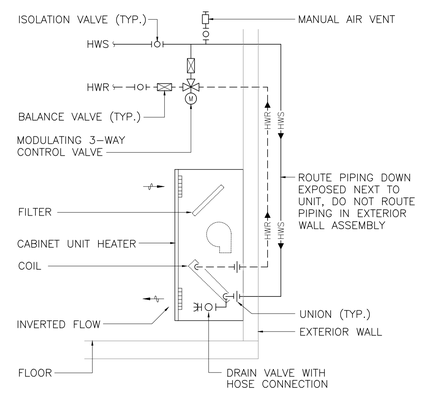

8 M8.2 WALL CUH DETAIL

SCALE: NONE

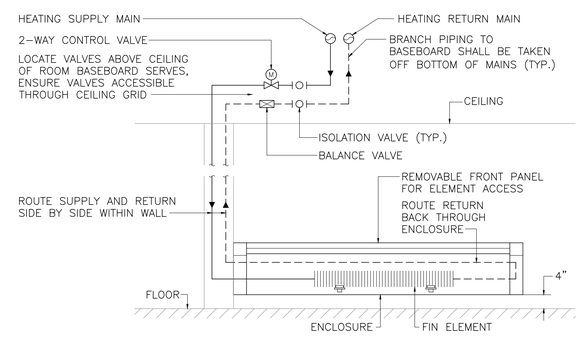

9 M8.2 BASEBOARD DETAIL

SCALE: NONE

STATE OF ALASKA 49TH
Timothy C Hickman
ME-14669
05/09/18
REGISTERED PROFESSIONAL ENGINEER

Burkhart Croft
ARCHITECTS LLC
880 N Street Suite 302 | Anchorage Alaska 99501
T: 907.929.9334 | www.burkhart-croft.com

HZA
ENGINEERING SOLUTIONS
HZA Engineering, LLC
113 W. Northern Lights Blvd., Suite 240
Anchorage, Alaska 99503
Tel. (907) 562-1012 Fax (907) 562-1013
AK Corporation # AECL081

MATANUSKA-SUSITNA BOROUGH

MSB FIRE STATION 6-2

WASILLA, ALASKA

DATE:	5/9/2018
DRAWN:	LRJ
CHECKED:	TCH
PROJECT:	2017.064.0
DRAWING TITLE:	MECHANICAL DETAILS
REVISIONS:	
SHEET NO:	**M8.2**

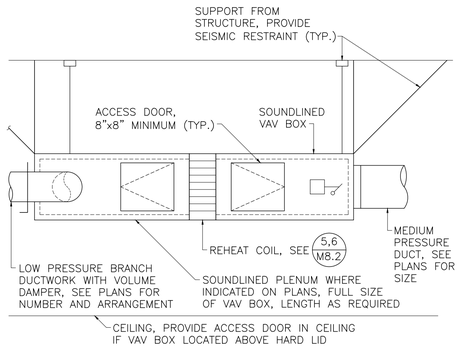

1 M8.3 VAV BOX DETAIL

SCALE: NONE

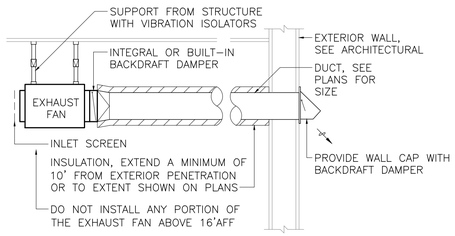

2 M8.3 WALL EXHAUST FAN DETAIL

SCALE: NONE

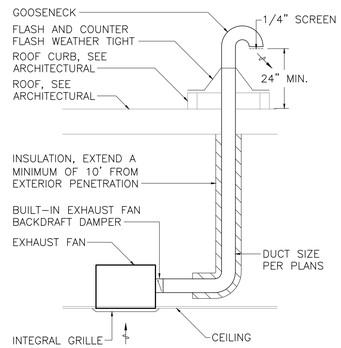

3 M8.3 ROOF EXHAUST FAN DETAIL

SCALE: NONE

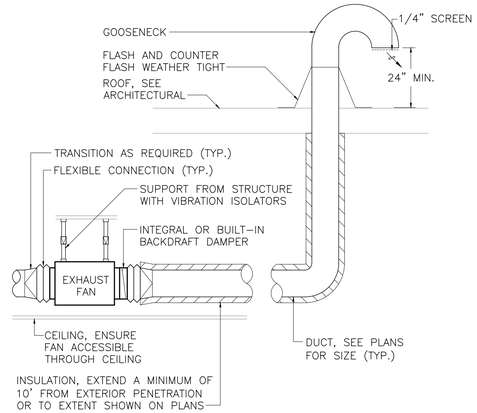

4 M8.3 INLINE EXHAUST FAN DETAIL

SCALE: NONE

STATE OF ALASKA 49TH
Timothy C Hickman
ME-14669
05/09/18
REGISTERED PROFESSIONAL ENGINEER

Burkhart Croft ARCHITECTS LLC
880 N Street Suite 302 | Anchorage Alaska 99501
T: 907.929.9334 | www.burkhart-croft.com

HZA ENGINEERING SOLUTIONS
HZA Engineering, LLC
113 W. Northern Lights Blvd., Suite 240
Anchorage, Alaska 99503
Tel. (907) 562-1012 Fax (907) 562-1013
AK Corporation # AECL081

MATANUSKA-SUSITNA BOROUGH

MSB FIRE STATION 6-2

WASILLA, ALASKA

DATE:	5/9/2018
DRAWN:	LRJ
CHECKED:	TCH
PROJECT:	2017.064.0
DRAWING TITLE:	MECHANICAL DETAILS
REVISIONS:	
SHEET NO:	**M8.3**

ELECTRICAL SYMBOLS LEGEND

	LIGHT FIXTURE – SURFACE WALL MOUNTED		PANEL
	LIGHT FIXTURE – SURFACE MOUNTED		DUPLEX RECEPTACLE
	LIGHT FIXTURE – RECESSED MOUNTED		GROUND FAULT CURRENT INTERRUPTER RECEPTACLE
	LIGHT FIXTURE – 4' RECESS MOUNTED		QUADRAPLEX RECEPTACLE
	LIGHT FIXTURE – 4' RECESS MOUNTED	A–1 A–3	LETTER AND # INDICATES SUPPLY PANEL AND BRANCH CIRCUIT, UNLESS OTHERWISE NOTED 3/4" CONDUIT HOMERUN (1/2" BRANCH CIRCUIT) AND 3#12 AWG
	LIGHT FIXTURE – RECESS MOUNTED 2'x2'		
	LIGHT FIXTURE – 4' SURFACE/PENDANT MOUNTED		SPECIAL PURPOSE RECEPTACLE
	LIGHT FIXTURE – 4' SURFACE/PENDANT MOUNTED		JUNCTION BOX
	LIGHT FIXTURE – SURFACE MOUNTED 2'x2'		FLOOR MOUNTED DEVICE (DUPLEX REC. SHOWN)
	LIGHT FIXTURE – WALL MOUNTED		SINGLE RECEPTACLE
	LIGHT STRIP FIXTURE – SURFACE MOUNTED		DISCONNECT SWITCH
	TRACK LIGHTING SYSTEM		FUSED DISCONNECT SWITCH
	POLE MOUNTED AREA LIGHT		COMBINATION MOTOR STARTER DISCONNECT
	FIXTURE WITH EMERGENCY BATTERY BACK–UP	S_F	FRACTIONAL HP MOTOR SWITCH
	EXIT LIGHT – CEILING MOUNTED		MOTOR
	EXIT LIGHT – WALL MOUNTED	CR	CORD REEL
	SELF–CONTAINED EMERGENCY LIGHT	GF	GROUND FAULT CIRCUIT INTERRUPTER
	REMOTE HEAD ASSOCIATED W/ EMERGENCY LIGHT	UG/E	UNDERGROUND ELECTRICAL
X	FIXTURE IDENTIFICATION (LETTER INDICATES TYPE)	NL	NIGHT LIGHT
S_L OS a	LOWER CASE LETTER INDICATES SWITCHING CONTROL REQUIREMENTS PER ROOM, AREA, OR ZONE. REFER TO LIGHTING CONTROL SCHEDULE FOR REQUIREMENTS	E	EXISTING FIXTURE OR DEVICE TO REMAIN
		R	EXISTING FIXTURE TO BE RELOCATED
OS	OCCUPANCY SENSOR, REFER TO LIGHTING CONTROL SCHEDULE FOR REQUIREMENTS	EF	EXHAUST FAN
		U.O.N.	UNLESS OTHERWISE NOTED
S	SINGLE POLE SWITCH	WP	WEATHERPROOF
S_3 S_4	THREE WAY SWITCH AND FOUR WAY SWITCH	CLG	FIXTURE MOUNTED ON CEILING
S_D	DIMMER SWITCH – SEE LIGHTING CONTROL SCHEDULE	AC	ABOVE COUNTER – COORDINATE MOUNTING HEIGHTS AND LOCATIONS OF OUTLETS DENOTED AS ABOVE COUNTER TO BE INSTALLED 6" ABOVE COUNTERS OR BACKSPLASHES, WHICHEVER IS HIGHER
S_{OS}	OCCUPANCY SENSOR SWITCH CONTROLS. REFER TO LIGHTING CONTROL SCHEDULE FOR REQUIREMENTS		
S_P	PILOT LIGHT SWITCH	BC	BELOW COUNTER – COORDINATE MOUNTING HEIGHTS AND LOCATIONS OF OUTLETS DENOTED AS BELOW COUNTER TO BE INSTALLED NO MORE THAN 12" BELOW THE COUNTER TOP
S_{SC}	SPEED CONTROL SWITCH FOR MECHANICAL CEILING FAN		
	CONDUIT, CONCEALED		
#10	NUMBER AND SIZE OF WIRES (NO SLASHES = 3#12)	EM	FIXTURE WITH EMERGENCY BATTERY BACK–UP
A–2	HOMERUN TO PANEL (PANEL AND CIRCUIT No.)	WIFI	WIRELESS ACCESS ROUTER
X	NOTE TAG (No. INDICATES NOTE)		FA SMOKE DETECTOR
P	PHOTOCELL	CO	CARBON MONOXIDE DETECTOR
FS	FIRE SMOKE DAMPER	135°F	FA HEAT DETECTOR (FIXED TEMP. NOTED)
TV	TELEVISION OUTLET		DUCT MOUNTED SMOKE DETECTOR
	SPRINKLER SYSTEM TAMPER SWITCH		FA HORN STROBE
	SPRINKLER SYSTEM FLOW SWITCH		FA MANUAL PULL STATION
	TELECOMMUNICATION OUTLET		BELL
PB	PANIC BUTTON		CAMERA

GENERAL NOTES

1. COORDINATE WITH GENERAL CONTRACTOR TO ENSURE THAT NEC REQUIRED WORKING CLEARANCES AND DEDICATED ELECTRICAL SPACES AROUND ALL ELECTRICAL EQUIPMENT, PANELS, DISCONNECTS, TRANSFORMERS, MOTOR STARTERS, VFD'S, ETC. ARE MAINTAINED AND ARE NOT AFFECTED BY THE WORK PROVIDED AS PART OF THIS PROJECT. WHERE NECESSARY, PROVIDE STRUCTURAL CHANNEL (UNISTRUT) SUPPORT FOR INSTALLATION.
2. COORDINATE EXACT LOCATIONS AND REQUIREMENTS OF MECHANICAL ITEMS PRIOR TO ROUGH–IN. COORDINATE AND PROVIDE ALL REQUIRED POWER AND CONTROL CONNECTIONS AS NECESSARY FOR COMPLETE AND FULLY OPERATIONAL SYSTEMS AS INTENDED. PROVIDE REQUIRED DISCONNECTING MEANS. REFERENCE MECHANICAL DRAWINGS, SPECIFICATIONS, AND SEQUENCE OF OPERATIONS.
3. COORDINATE EXACT LOCATIONS AND REQUIREMENTS OF CIVIL ITEMS PRIOR TO ROUGH–IN. COORDINATE AND PROVIDE ALL REQUIRED POWER AND CONTROL CONNECTIONS AS NECESSARY FOR COMPLETE AND FULLY OPERATIONAL SYSTEMS AS INTENDED. PROVIDE REQUIRED DISCONNECTING MEANS. REFERENCE CIVIL DRAWINGS AND SPECIFICATIONS.
4. COORDINATE EXACT HEIGHTS AND LOCATIONS OF ELECTRICAL DEVICES WITH ARCHITECTURAL, FURNITURE, AND EQUIPMENT DRAWINGS PRIOR TO ROUGH–IN.
5. SIZE CONDUCTORS TO PROVIDE MAXIMUM VOLTAGE DROP NOT TO EXCEED 3% IN BRANCH CIRCUITS OR FEEDERS. IN GENERAL, FOR A 20 AMP 120V CIRCUIT, MINIMUM WIRE SIZE SHALL BE #12 (CU.) FOR BRANCH CIRCUITS LESS THAN 75', #10 (CU.) FOR CIRCUITS 75' TO 125' AND #8 (CU.) FOR CIRCUITS 125 TO 200'.
6. PROVIDE SEISMIC BRACING AND SUPPORT FOR ALL ELECTRICAL EQUIPMENT WHERE REQUIRED BY THE IBC AND OTHER APPLICABLE CODES.
7. GFCI RECEPTACLES SHALL BE LOCATED IN A READILY ACCESSIBLE LOCATION PER NEC 210.8. IF NOT POSSIBLE, PROVIDE CIRCUITS SUPPLIED BY A 5mA GFCI CIRCUIT BREAKER.
8. ALTHOUGH NOT SHOWN, AND UNLESS CONDUCTORS ENTER THE BOX THROUGH A RACEWAY, SWITCH BOXES SHALL INCLUDE A "GROUNDED CONDUCTOR" (NEUTRAL) OF THE CONTROLLED LIGHTING CIRCUIT AS REQUIRED BY NEC 404.2(C).
9. LIGHTING CONTROLS SHALL BE SELECTED, PROVIDED, CONNECTED, AND PROGRAMMED BY THE CONTRACTOR TO PROVIDE ADEQUATE CONTROL AND COVERAGE OF THE SPACES CONTROLLED.
10. THE INTERCOM AND CLOCK SYSTEM IS A DESIGN BUILD COMPONENT OF THIS PROJECT. THE CONTRACTOR SHALL PROVIDE DESIGN AND INSTALLATION WITH THE QUANTITY AND LOCATIONS OF DEVICES, POWER AND CONTROL WIRING, CONNECTIONS, ETC. AS REQUIRED FOR A COMPLETE AND OPERABLE SYSTEM AS INTENDED. THE CONTRACTOR SHALL REFERENCE THE ARCHITECTURAL DRAWINGS FOR WALL AND CEILING TYPES, ETC.
11. THE STATION ALERT SYSTEM IS A DESIGN BUILD COMPONENT OF THIS PROJECT. THE CONTRACTOR SHALL PROVIDE DESIGN AND INSTALLATION WITH THE QUANTITY AND LOCATIONS OF DEVICES, POWER AND CONTROL WIRING, CONNECTIONS, ETC. AS REQUIRED FOR A COMPLETE AND OPERABLE SYSTEM AS INTENDED.
12. THE FIRST RESPONDER RADIO COVERAGE SYSTEM IS A DESIGN BUILD COMPONENT OF THIS PROJECT. THE CONTRACTOR SHALL PROVIDE DESIGN AND INSTALLATION WITH THE QUANTITY AND LOCATIONS OF DEVICES, POWER AND CONTROL WIRING, CONNECTIONS, ETC. AS REQUIRED FOR A COMPLETE AND OPERABLE SYSTEM AS INTENDED.
13. FIRE ALARM AND CARBON MONOXIDE DEVICES ARE NOT SHOWN, BUT ARE REQUIRED. ANY FIRE ALARM/CARBON MONOXIDE DEVICES SHOWN (IF ANY) ARE FOR REFERENCE ONLY. THE FIRE ALARM/CARBON MONOXIDE SYSTEM IS A DESIGN BUILD COMPONENT OF THIS PROJECT, TO BE DESIGNED BY A NICET LEVEL 3 DESIGNER OR HIGHER FOR FIRE MARSHAL REVIEW AND APPROVAL PRIOR TO INSTALLATION. THE CONTRACTOR SHALL PROVIDE DESIGN AND INSTALLATION WITH THE QUANTITY AND LOCATIONS OF DEVICES, WIRING, ETC. AS REQUIRED FOR COMPLIANCE WITH THE NFPA 72, IBC, IFC, GOVERNING CODES INCLUDING LOCAL AMENDMENTS AND THE LOCAL A.H.J. THE CONTRACTOR SHALL REFERENCE THE ARCHITECTURAL DRAWINGS FOR CEILING TYPES, HEIGHTS, EXTENTS, BEAM LOCATIONS AND DEPTHS, WALL TYPES, INSULATION VALUES, ETC.
14. THE DOOR ACCESS SYSTEM IS A DESIGN BUILD COMPONENT OF THIS PROJECT. ANY DOOR ACCESS DEVICES SHOWN (IF ANY) ARE TO ESTABLISH A SCOPE OF WORK AND ARE FOR REFERENCE ONLY. THE CONTRACTOR SHALL PROVIDE DESIGN AND INSTALLATION WITH THE QUANTITY AND LOCATIONS OF DEVICES, POWER AND CONTROL WIRING, CONNECTIONS, ETC. AS REQUIRED FOR A COMPLETE AND OPERABLE SYSTEM AS INTENDED. THE CONTRACTOR SHALL REFERENCE THE ARCHITECTURAL DRAWINGS FOR DOOR TYPES, ETC.
15. THE CAMERA SURVEILLANCE SYSTEM IS A DESIGN BUILD COMPONENT OF THIS PROJECT. ANY CAMERAS SHOWN ARE TO ESTABLISH A SCOPE OF WORK AND ARE FOR REFERENCE ONLY. THE CONTRACTOR SHALL PROVIDE DESIGN AND INSTALLATION WITH THE QUANTITY AND LOCATIONS OF DEVICES, POWER AND CONTROL WIRING, CONNECTIONS, ETC. AS REQUIRED FOR A COMPLETE AND OPERABLE SYSTEM AS INTENDED.

STATE OF ALASKA 49TH BRETT A. BINGHAM EE-10821 5-9-18 REGISTERED PROFESSIONAL ENGINEER

Burkhart Croft ARCHITECTS LLC
880 N Street Suite 302 | Anchorage Alaska 99501
T: 907.929.9334 | www.burkhart-croft.com

HZA ENGINEERING SOLUTIONS
HZA Engineering, LLC
113 W. Northern Lights Blvd., Suite 240
Anchorage, Alaska 99503
Tel. (907) 562-1012 Fax (907) 562-1013
AK Corporation # AECL081

MATANUSKA-SUSITNA BOROUGH

MSB FIRE STATION 6-2

WASILLA, ALASKA

DATE:	5/9/2018
DRAWN:	DJL
CHECKED:	BAB
PROJECT:	2017.064.0
DRAWING TITLE:	ELECTRICAL LEGEND
REVISIONS:	
SHEET NO:	**E0.1**

LIGHTING FIXTURE SCHEDULE

TYPE	MANUFACTURER AND MODEL NUMBER	DESCRIPTION	LAMP		MOUNTING	
			WATTS	LUMENS	TYPE	HEIGHT
A	LUX #LUX–IK10–3–D–HO2–835–4'–U10–CA4'–DIR–TOP–X/10–XX –STND–(EM12)	4' LED HIGHBAY WITH 36,500 LUMENS, 3500K COLOR TEMPERATURE, EMERGENCY BATTERY (277V) WHERE INDICATED. PROVIDE CORD, MOUNTING, AND ACCESSORIES AS REQUIRED.	271W LED	36.438	PENDANT/ SURFACE	CEILING
B1	LITHONIA #2BLT4–48L–ADP–EZ1–LP835–(N100)–(EL14L)	4' RECESSED MOUNTED LED FIXTURE, WITH CURVED LINEAR PRISM CENTER BASKET DIFFUSER, MULTI–VOLT DIMMING DRIVER, 4,800 LUMENS, 3500K COLOR TEMPERATURE, 82 CRI, AND DAMP LOCATION LISTING. PROVIDE WITH NLIGHT WHERE USED WITH LOW VOLTAGE SWITCHING CONTROL. PROVIDE WITH EMERGENCY BATTERY PACK WHERE SHOWN.	45W LED	5121	RECESSED	CEILING
B2	LITHONIA #2BLT4–60L–ADP–EZ1–LP835–(N100)–(EL14L)	4' RECESSED MOUNTED LED FIXTURE, WITH CURVED LINEAR PRISM CENTER BASKET DIFFUSER, MULTI–VOLT DIMMING DRIVER, 6,000 LUMENS, 3500K COLOR TEMPERATURE, 82 CRI, AND DAMP LOCATION LISTING. PROVIDE WITH NLIGHT WHERE USED WITH LOW VOLTAGE SWITCHING CONTROL. PROVIDE WITH EMERGENCY BATTERY PACK WHERE SHOWN.	53W LED	6169	RECESSED	CEILING
C	LITHONIA #ZL1N–L48–SMR–5000LM–FST–MVOLT –35K–80CRI–WH–(NPP16D)	4' LOW–PROFILE LED STRIPLIGHT, WITH MULTI–VOLT DRIVER, 3500K TEMPERATURE, SHIELDING, AND WHITE FINISH. PROVIDE WITH NLIGHT WHERE USED WITH LOW VOLTAGE SWITCHING CONTROL.	34W LED	4515	SURFACE/ PENDANT	CEILING/ FIELD LOCATE
D	LITHONIA #LDN6–35/20–L06–AR–LSS–MVOLT–EZ10–(NPS80EZ 277V)–(EL)	6" APERTURE, 2000 LUMEN DIMMABLE LED RECESSED CAN FIXTURE WITH OPEN REFLECTOR, WET LOCATION LISTING, CLEAR TRIM, MULTI–VOLT DRIVER, DAMP LOCATION LISTED, AND 3500K COLOR TEMPERATURE. PROVIDE WITH NLIGHT (277V) WHERE USED WITH LOW VOLTAGE SWITCHING CONTROL. PROVIDE WITH EMERGENCY BATTERY PACK WHERE SHOWN.	23W LED	2025	RECESSED	CEILING
E	GOTHAM #EVO–35/10–6DFR–MVOLT–EZ10–(NPS80EZ 277V)	6" LED NON–CONDUCTIVE SHOWER LIGHT, RECESSED CAN STYLE FIXTURE WITH LENSED REFLECTOR, WET LOCATION LISTING, 1,000 LUMEN LED, MULTI–VOLT DRIVER, AND 3500K COLOR TEMPERATURE. PROVIDE WITH NLIGHT (277V) WHERE USED WITH LOW VOLTAGE SWITCHING CONTROL.	10W LED	1000	RECESSED	CEILING
F2	LITHONIA #WL2–22L–EZ1–LP835–(N100)	2' LED WALL MOUNT FIXTURE WITH LENS, WHITE FINISH, 3500K, DAMP LOCATION LISTED UNIVERSAL VOLTAGE, STANDARD DIMMING DRIVER. PROVIDE WITH NLIGHT WHERE USED WITH LOW VOLTAGE SWITCHING CONTROL.	21W LED	2120	WALL	ABOVE MIRROR
F4	LITHONIA #WL4–40L–EZ1–LP835–(N100)	4' LED WALL MOUNT FIXTURE WITH LENS, WHITE FINISH, 3500K, DAMP LOCATION LISTED UNIVERSAL VOLTAGE, STANDARD DIMMING DRIVER. PROVIDE WITH NLIGHT WHERE USED WITH LOW VOLTAGE SWITCHING CONTROL.	40W LED	4124	WALL	ABOVE MIRROR
G	LITHONIA #2GTL–4–48L–A12V–EZ1–LP835–(N100)	4' RECESSED MOUNTED LED FIXTURE, WITH ACRYLIC LENS (INVERTED FOR EASE OF CLEANING), MULTI–VOLT DIMMING DRIVER, 3500K COLOR TEMPERATURE, DAMP LOCATION LISTING. PROVIDE WITH NLIGHT WHERE USED WITH LOW VOLTAGE SWITCHING CONTROL.	38W LED	5200	RECESSED	CEILING
H	LITHONIA #LBL4–6000LM–80CRI–35K–MIN1–ZT–MVOLT–(NLIGHT)	4' SURFACE MOUNT LED FIXTURE WITH WRAPAROUND DIFFUSER, DAMP LOCATION LISTED, MULTI–VOLT DIMMING DRIVER, 3500K COLOR TEMPERATURE. PROVIDE WITH NLIGHT WHERE USED WITH LOW VOLTAGE SWITCHING CONTROL.	50W LED	6101	SURFACE	CEILING
J	LITHONIA #ZL1N–L24–SMR–2500LM –FST–MVOLT–40K–80CRI –WH–(NPP16D)	2' LOW–PROFILE LED STRIPLIGHT, WITH MULTI–VOLT DRIVER, 4000K TEMPERATURE, SHIELDING, AND WHITE FINISH. PROVIDE WITH NLIGHT WHERE USED WITH LOW VOLTAGE SWITCHING CONTROL.	19W LED	2315	SURFACE/ PENDANT	CEILING/ FIELD LOCATE
K	LITHONIA #DMW2–L24–3000LM–ACL–WD–MVOLT–GZ1–35K–80CRI	2' ENCLOSED AND GASKETED LED FIXTURE WITH, 3000 LUMENS, ACRYLIC DIFFUSER, WIDE DISTRIBUTION, MVOLT, DIMMING, 3500K COLOR TEMPERATURE, AND 80CRI.	27W LED	3680	SURFACE/ PENDANT	CEILING
L	LITHONIA #DSXF1–LED–P1–40K–MSP–MVOLT–XX–FV–DDBXD WITH HYDREL #SMSA–X–X–DDB	D–SERIES SIZE 1 LED FLOOD LUMINAIRE WITH 1 COB ENGINE, 4000K COLOR TEMPERATURE, MEDIUM SPOT DISTRIBUTION, MULTIVOLT DRIVER, DARK BRONZE FINISH AND MOUNTING OPTIONS AS REQUIRED. PROVIDE DARK BRONZE STANCHION, WITH HEIGHT AND FIXTURE MOUNTING OPTIONS APPROPRIATE FOR FIXTURE SELECTED MOUNTING OPTIONS.	21W LED	2850	SURFACE	GROUND
M	VOLT #PL41K LINEAR LED FIXTURE WITH DIMMABLE POWER SUPPLY, POWER FEEDS ETC.	LINEAR LED LIGHTING WITH ADHESIVE BACKING, LOW OUTPUT 184 LUMENS/FOOT, WITH 4100K COLOR TEMPERATURE, DIMMABLE POWER SUPPLY (120–277V INPUT), POWER FEEDS, UL LISTING, AND ALL OTHER ACCESSORIES AS NEEDED.	41.9W LED/ 20 FT	184/FT	SURFACE	VERIFY WITH ARCHITECT
N	LITHONIA #DSXW1 LED–20C–700–40K–TFTM–MVOLT–DDBTXD	LED WALL MOUNTED FIXTURE WITH WET LOCATION LISTING, FORWARD THROW MEDIUM DISTRIBUTION, 700mA DRIVER, 4000K COLOR TEMPERATURE, AND TEXTURED DARK BRONZE FINISH.	46W LED	5554	WALL	AS INDICATED ON DRWGS VERIFY W/ ARCH
O1	LITHONIA #DSX1 LED–P3–40K–T3M –MVOLT–(X)PA–DDBTXD WITH 30' POLE	ARM MOUNTED LED AREA LIGHT WITH TYPE 3 MEDIUM DISTRIBUTION, P3 FORWARD OPTICS, 4000K COLOR TEMPERATURE, POLE MOUNTING BLOCK TO MATCH SHAPE OF POLE, DRILLING PATTERN AS REQUIRED. MULTI VOLT, WITH 30' POLE RATED FOR SELECTED FIXTURE WEIGHT & EPA IN WIND SPEEDS WITH 3 SECOND GUSTS AS INDICATED ON STRUCTURAL DRAWINGS. TEXTURED DARK BRONZE FIXTURE & POLE FINISHES.	102W LED	12582	POLE	30' POLE AND 3' BASE
O2	LITHONIA #DSX1 LED–P7–40K–TFTM–MVOLT–(X)PA–DDBTXD WITH 30' POLE	ARM MOUNTED LED AREA LIGHT WITH TFTM DISTRIBUTION, P7 FORWARD OPTICS, 4000K COLOR TEMPERATURE, POLE MOUNTING BLOCK TO MATCH SHAPE OF POLE, DRILLING PATTERN AS REQUIRED. MULTI VOLT, WITH 30' POLE RATED FOR SELECTED FIXTURE WEIGHT & EPA IN WIND SPEEDS WITH 3 SECOND GUSTS AS INDICATED ON STRUCTURAL DRAWINGS. TEXTURED DARK BRONZE FIXTURE & POLE FINISHES.	183W LED	20734	POLE	30' POLE AND 3' BASE
P	LITHONIA #DSX2 LED–P4–40K–TFTM–MVOLT–(X)PA–DDBTXD WITH 30' POLE	ARM MOUNTED LED AREA LIGHT WITH TFTM DISTRIBUTION, P4 FORWARD OPTICS, 4000K COLOR TEMPERATURE, POLE MOUNTING BLOCK TO MATCH SHAPE OF POLE, DRILLING PATTERN AS REQUIRED. MULTI VOLT, WITH 30' POLE RATED FOR SELECTED FIXTURE WEIGHT & EPA IN WIND SPEEDS WITH 3 SECOND GUSTS AS INDICATED ON STRUCTURAL DRAWINGS. TEXTURED DARK BRONZE FIXTURE & POLE FINISHES.	270W LED	33390	POLE	30' POLE AND 3' BASE
Q	KENALL #AUCLED–I–MW–11L35K–24–277–XX	2 FT. LED UNDER CABINET TASK LIGHT WITH WHITE FINISH, 277V DRIVER, ACCESSORIES AS REQUIRED	11W LED	700	SURFACE	UNDER CABINET

LIGHTING FIXTURE SCHEDULE (continued)

TYPE	MANUFACTURER AND MODEL NUMBER	DESCRIPTION	LAMP		MOUNTING	
			WATTS	LUMENS	TYPE	HEIGHT
R	KIRLIN #LRR–07462–1500L–277 –41K	7" DIAMETER APERTURE RECESSED SEALED AND GASKETED LED DOWNLIGHT WITH WET LOCATION LISTING, 1500 LUMENS, SELF–FLANGED WHITE TRIM, 277V POWER SUPPLY, 4100K, AND PRISMATIC LENS	20W LED	1327	RECESSED	CANOPY
T	KENALL #MR13FD–PP–DB–20L40K –DV	SURFACE MOUNTED LED FIXTURE, WITH DARK BRONZE FINISH, 20 WATT, 4000K COLOR TEMPERATURE, AND UNIVERSAL 120–277 VOLTAGE.	24W LED	2250	SURFACE	CANOPY
U	LITHONIA #2BLTX4–48L–ADP–EZ1–LP835–(N100)	4' SURFACE MOUNTED LED FIXTURE, WITH CURVED LINEAR PRISM CENTER BASKET DIFFUSER, MULTI–VOLT DIMMING DRIVER, 4,800 LUMENS, 3500K COLOR TEMPERATURE, 82 CRI, AND DAMP LOCATION LISTING. PROVIDE WITH NLIGHT WHERE USED WITH LOW VOLTAGE SWITCHING CONTROL.	45W LED	5121	SURFACE	CEILING
	LITHONIA #ELM2 LED	EMERGENCY LIGHTING UNIT WITH 120/277V INPUT, MAINTENANCE FREE BATTERY, ADJUSTABLE EMERGENCY HEADS, AND UNIVERSAL MOUNTING FOR CEILING AND/OR WALL.	3W LED	–	WALL/ CEILING	7.5' (VERIFY)
	LITHONIA #ELM654 RO	EMERGENCY LIGHTING UNIT WITH 120/277V INPUT, MAINTENANCE FREE LEAD CALCIUM BATTERY, WITHOUT HEADS, 54W (6V) OUTPUT FOR CONNECTION TO REMOTE EMERGENCY HEADS, DAMP LOCATION LISTED, AND UNIVERSAL MOUNTING FOR CEILING AND/OR WALL.	–	–	WALL/ CEILING	7.5' (VERIFY)
	BEGHELLI #ESL–6V–36W–2LR–FM–9W INCANDESCENT	EMERGENCY LIGHTING UNIT WITH 120/277V INPUT, MAINTENANCE FREE LEAD CALCIUM BATTERY, ADJUSTABLE HEADS, 36W (6V) OUTPUT FOR CONNECTION TO REMOTE EMERGENCY HEADS, AND UNIVERSAL MOUNTING FOR CEILING AND/OR WALL.	6V 9W INCANDESCENT (2)		WALL/ CEILING	7.5' (VERIFY)
R	LITHONIA #ELA–AFNR–DB	COMPACT ARCHITECTURAL REMOTE EMERGENCY EXTERIOR FLOODLIGHT (6V) WITH WET LOCATION LISTING.	(2) 6W 6V	–	WALL	UNLESS OTHERWISE NOTED 7.5' VERIFY WITH ARCH. DWGS.
	LITHONIA #TLE–1/2–G–EL N	SELF CONTAINED EMERGENCY EXIT SIGN WITH MAINTENANCE FREE BATTERY WITH 120/277 VOLT INPUT, DIE CAST ALUMINUM HOUSING. PROVIDE WITH MOUNTING, QUANTITY OF FACES AND DIRECTIONAL ARROWS AS INDICATED ON DRAWINGS.	LED	–	WALL/ CEILING/ PENDANT	ABOVE DOOR/AS APPROPRIATE
	LITHONIA #LQMSW3G–120/277–EL N	SELF CONTAINED EMERGENCY EXIT SIGN WITH MAINTENANCE FREE BATTERY WITH 120/277 VOLT INPUT, THERMOPLASTIC HOUSING. PROVIDE WITH MOUNTING, QUANTITY OF FACES AND DIRECTIONAL ARROWS AS INDICATED ON DRAWINGS.	LED	–	WALL/ CEILING/ PENDANT	ABOVE DOOR/AS APPROPRIATE

LIGHTING FIXTURE SCHEDULE NOTES:

1. OPTIONAL nLIGHT CONTROLS INTEGRAL TO THE LIGHT FIXTURES MAY BE PROVIDED AS APPROPRIATE, IN CONJUNCTION WITH THE ROOM OR AREA SWITCHING SCHEME (SWITCHES, OCCUPANCY SENSORS, ETC.).
2. WHERE FIXTURES ARE LOCATED IN THE APPARATUS AND GENERAL USE BAYS, THEY ARE TO BE SUSPENDED/SURFACE MOUNTED SO THAT THE BOTTOM OF THE FIXTURES ARE AT EQUAL HEIGHTS. VERIFY AND COORDINATE EXACT LOCATIONS AND HEIGHTS TO AVOID CONFLICTS WITH BEAMS, OVERHEAD DOORS, MECHANICAL HARDWARE AND SEISMIC BRACING AS REQUIRED.

LIGHTING CONTROL SCHEDULE

OS	PROVIDE WALL OR CEILING MOUNT OCCUPANCY SENSOR CONTROLS TO BE USED IN CONJUNCTION WITH MANUAL OVERIDE "ON/OFF" AND DIMMING CONTROLS (WHERE SHOWN), IN ZONES AS INDICATED BY LOWER CASE LETTER. CONTROLS ARE TO BE OF A TYPE, QUANTITY AND LOCATED AS APPROPRIATE FOR COVERAGE AS REQUIRED. WHERE MULTIPLE LOWER CASE LETTERS ARE SHOWN TO BE CONTROLLED BY OCCUPANCY SENSOR CONTROLS, THEY SHALL BE CONTROLLED BY SENSOR(S) AS A SINGLE ZONE.
$_{OS}$	PROVIDE WALL MOUNT OCCUPANCY SENSOR SWITCH CONTROL. CONTROLS ARE TO BE OF A TYPE, QUANTITY AND LOCATED AS APPROPRIATE FOR COVERAGE AS REQUIRED. SENSORS ARE TO BE PROGRAMMED FOR MANUAL "ON", AUTO "OFF".
$_{D}$	PROVIDE WALL MOUNT "ON/OFF" DIMMING CONTROLS (LINE OR LOW VOLTAGE AS APPROPRIATE). CONTROLS ARE TO BE OF A TYPE, QUANTITY AND LOCATED AS APPROPRIATE FOR CONTROL AS REQUIRED.
$ $_3$ $_4$	MANUAL "ON/OFF" WALL MOUNT SWITCH CONTROLS (LINE OR LOW VOLTAGE AS APPROPRIATE). TO BE USED IN CONJUNCTION WITH AUTOMATIC LIGHTING CONTROLS WHERE INDICATED ON THE DRAWINGS.
$_{GFX}$	PROVIDE TOUCHSCREEN GRAPHIC WALL POD SWITCH CONTROLS. CONTROLS ARE TO HAVE SEPARATE ON/OFF, DIMMING, TIMECLOCK FUNCTIONS, AND PRESET SCENES FOR EACH ZONE TO BE CONTROLLED. TO BE USED WITH AUTOMATIC OCCUPANCY SENSOR CONTROLS.
a,b	LOWER CASE LETTER ADJACENT TO SWITCH, OCCUPANCY SENSOR, OR LIGHT FIXTURE INDICATES LIGHTING CONTROL ZONES. WHERE NOT SHOWN, CONTROL OF FIXTURES SHALL BE FROM SWITCHES AND/OR SENSORS IN THAT ENCLOSED SPACE OR ROOM.

THE CONTRACTOR IS RESPONSIBLE FOR PROVIDING VENDOR DESIGN, LAYOUT, PROGRAMMING, AND STARTUP AS NECESSARY FOR LIGHTING CONTROLS AS INDICATED AND INTENDED FOR PROPER OPERATION. LIGHTING CONTROLS SHALL BE SELECTED, PROVIDED, CONNECTED, AND PROGRAMMED TO PROVIDE ADEQUATE CONTROL AND COVERAGE OF THE SPACES CONTROLLED. PROVIDE CONNECTIONS OF THE LIGHTING CONTROLS TO DDC SYSTEM FOR ADDED FLEXIBILITY OF CONTROL, SPECIFICALLY THE EXTERIOR LIGHTING AND THE LIGHTING IN THE LARGE COMMON SPACES.

STATE OF ALASKA 49TH BRETT A. BINGHAM EE-10821 5-9-18 REGISTERED PROFESSIONAL ENGINEER

Burkhart Croft ARCHITECTS LLC
880 N Street Suite 302 | Anchorage Alaska 99501
T: 907.929.9334 | www.burkhart-croft.com

HZA ENGINEERING SOLUTIONS
HZA Engineering, LLC
113 W. Northern Lights Blvd., Suite 240
Anchorage, Alaska 99503
Tel. (907) 562-1012 Fax (907) 562-1013
AK Corporation # AECL081

MATANUSKA-SUSITNA BOROUGH
MSB FIRE STATION 6-2
WASILLA, ALASKA

DATE: 5/9/2018
DRAWN: DJL
CHECKED: BAB
PROJECT: 2017.064.0
DRAWING TITLE: FIXTURE SCHEDULE
REVISIONS:
SHEET NO: **E0.2**

ELECTRICAL SPECIFICATIONS

GENERAL CONDITIONS – PROVIDE AND INSTALL ALL LABOR, MATERIAL, AND EQUIPMENT FOR A COMPLETE AND PROPERLY OPERABLE ELECTRICAL SYSTEM AS DESCRIBED ON THE DRAWINGS AND IN THESE SPECIFICATIONS. ALL WORK SHALL BE PERFORMED IN A NEAT AND PROFESSIONAL MANNER USING GOOD ENGINEERING PRACTICES. ALL NEW WORK AND EXISTING WORK MODIFIED BY THIS PROJECT SHALL COMPLY WITH THE LATEST ADOPTED EDITION OF THE NATIONAL ELECTRICAL CODE, NFPA, INTERNATIONAL BUILDING CODE, AND INTERNATIONAL FIRE CODE INCLUDING ALL STATE AND LOCAL CODES AND AMENDMENTS. THIS CONTRACTOR SHALL INQUIRE INTO AND COMPLY WITH ALL APPLICABLE CODES, ORDINANCES, AND REGULATIONS.

THE CONSTRUCTION DRAWINGS ARE DIAGRAMMATIC, NOT NECESSARILY SHOWING ALL FEATURES OR EXACT LOCATIONS OF FIXTURES, EQUIPMENT, ETC. UNLESS SPECIFICALLY NOTED OTHERWISE. THE CONTRACTOR SHALL REVIEW THE DRAWINGS AND SPECIFICATIONS FOR EQUIPMENT TO BE PROVIDED BY OTHER DIVISIONS AND REQUIRING INSTALLATION AND/OR CONNECTION IN ACCORDANCE WITH THIS SECTION. APPARENT CONFLICTS BETWEEN PLANS AND SPECIFICATIONS, GOVERNING CODES OR UTILITIES REGULATIONS AS WELL AS UNCLEAR DIRECTIVES SHALL BE BROUGHT TO THE ATTENTION OF THE ARCHITECT. CODES, ORDINANCES, REGULATIONS, MANUFACTURER'S INSTRUCTIONS OR OTHER ESTABLISHED STANDARDS SHALL TAKE PRECEDENCE WHEN THEY ARE MORE STRINGENT OR CONFLICT WITH THE DRAWINGS AND SPECIFICATIONS.

THE ELECTRICAL DRAWINGS AND SPECIFICATIONS ARE INTENDED TO INCLUDE ALL LABOR AND MATERIALS NECESSARY TO PROVIDE A COMPLETE AND OPERATING FACILITY. ANY MATERIALS SHOWN AND CALLED FOR ON THE DRAWINGS BUT NOT MENTIONED IN THE SPECIFICATIONS, OR VICE VERSA, WHICH ARE NECESSARY FOR THE PROPER COMPLETION OF THE INSTALLATION OR OPERATION OF THE EQUIPMENT, SHALL BE FURNISHED THE SAME AS IF SPECIFICALLY CALLED FOR IN BOTH.

INSTALLATION OF ALL WORK SHALL BE PROVIDED SO THAT ALL COMPONENT PARTS SHALL FUNCTION AS AN INTEGRATED SYSTEM COMPLETE WITH ALL ASSOCIATED EQUIPMENT NECESSARY FOR PROPER OPERATION. ALL MATERIAL AND EQUIPMENT SHALL BE INSTALLED IN ACCORDANCE WITH THE MANUFACTURER'S WRITTEN INSTRUCTIONS. MATERIALS AND EQUIPMENT SHALL BE NEW AND SHALL BE LISTED TO ENSURE CONFORMANCE WITH APPLICABLE INDUSTRY STANDARDS, NEMA STANDARDS AND UNDERWRITERS LABORATORIES STANDARDS WHERE APPLICABLE.

PROVIDE A COMPLETE ELECTRICAL DISTRIBUTION SYSTEM INCLUDING SERVICE, MAIN DISTRIBUTION EQUIPMENT, FEEDERS, BRANCH CIRCUIT PANELS, BRANCH CIRCUITS, JUNCTION BOXES, OUTLET BOXES, WIRING DEVICES, COVERPLATES, CONDUIT, ETC. PROVIDE EQUIPMENT THAT IS RATED FOR AVAILABLE FAULT CURRENT AND INRUSH LEVELS. PROVIDE GROUND FAULT PROTECTION AS REQUIRED BY THE NEC FOR EACH DISCONNECTING MEANS RATED 480 VOLT AND 1000 AMPS OR GREATER. THE RATING OF THE DISCONNECT SHALL BE CONSIDERED TO BE THE RATING OF THE LARGEST FUSE THAT CAN BE INSTALLED OR THE HIGHEST CONTINUOUS CURRENT TRIP SETTING FOR WHICH THE ACTUAL OVERCURRENT DEVICE INSTALLED IN A CIRCUIT BREAKER IS RATED OR CAN BE ADJUSTED.

MARK UP A CLEAN SET OF RECORD DRAWINGS AS THE WORK PROGRESSES TO SHOW THE DIMENSIONED LOCATION OF ALL ELECTRICAL WORK WHICH WILL BECOME PERMANENTLY CONCEALED. SHOW ROUTING OF WORK IN PERMANENTLY CONCEALED BLIND SPACES WITHIN THE BUILDING. SHOW COMPLETE ROUTING AND SIZING OF ANY REVISIONS TO THE SYSTEMS SHOWN ON THE CONSTRUCTION DRAWINGS.

WARRANTY – THE CONTRACTOR SHALL GUARANTEE ALL WORK AND MATERIALS PROVIDED UNDER THIS CONTRACT TO BE FREE FROM DEFECTS IN MATERIALS, PROPER OPERATION AND WORKMANSHIP FOR A PERIOD OF ONE YEAR FROM OWNER OCCUPANCY. FAULTY MATERIALS OR WORKMANSHIP SHALL BE REPAIRED OR REPLACED TO THE SATISFACTION OF THE OWNER DURING THE GUARANTEE PERIOD.

PERMITS – PROCURE AND PAY FOR ALL FEES, PERMITS, REVIEWS, ETC. REQUIRED BY LOCAL AND STATE AGENCIES AND ALL LOCAL UTILITY COMPANIES.

REFERENCE SYMBOLS – THE ELECTRICAL "LEGEND" ON THE DRAWINGS IS A STANDARDIZED VERSION, AND ALL SYMBOLS SHOWN MAY NOT BE USED FOR THIS PROJECT. USE THE ELECTRICAL "LEGEND" AS A REFERENCE FOR THE SYMBOLS USED ON THE PROJECT DRAWINGS.

IDENTIFICATION – PROVIDE NAMEPLATES AND LABELS WHERE REQUIRED BY THE NEC AND TO IDENTIFY ALL ELECTRICAL DISTRIBUTION AND CONTROL EQUIPMENT AND LOADS SERVED. SECURE NAMEPLATES TO EQUIPMENT FRONTS USING SCREWS, RIVETS OR ADHESIVES. SECURE NAMEPLATE TO INSIDE FACE OF RECESSED PANELBOARD DOORS IN FINISHED LOCATIONS.

WIRING DEVICES: PROVIDE LABELS TO IDENTIFY WIRING DEVICES SUCH AS SWITCHES, FRACTIONAL HORSEPOWER MOTOR STARTER SWITCHES, AND RECEPTACLES. LABEL SHALL INCLUDE SUPPLY PANEL AND CIRCUIT. PROVIDE ADHESIVE LABELS TO IDENTIFY SPECIAL ELECTRICAL CHARACTERISTICS OF SPECIAL PURPOSE OUTLETS.

CONDUITS: IDENTIFY THE CIRCUIT NUMBERS OF THE BRANCH CIRCUIT CONDUCTORS CONTAINED INSIDE ALL CONDUITS ENTERING OR LEAVING PANELBOARDS WITH INDELIBLE BLACK MARKING PEN OR OTHER PERMANENT MEANS.

JUNCTION BOXES: IDENTIFY THE CIRCUIT NUMBERS OF THE BRANCH CIRCUIT CONDUCTORS CONTAINED INSIDE EACH JUNCTION BOX WITH INDELIBLE BLACK MARKING PEN OR OTHER PERMANENT MEANS. ON EXPOSED JUNCTION BOXES IN PUBLIC AREAS, MARK ON INSIDE OF COVER. MARK ALL FIRE ALARM SYSTEM JUNCTION BOXES AND COVERS WITH A RED PAINT AND "FA" NOTATION. APPROPRIATELY IDENTIFY ALL OTHER SPECIAL SYSTEM JUNCTION BOXES WITH SHEET STEEL COVERS.

CONDUIT – RACEWAY AND WIRING IN CLASSIFIED AREAS SHALL COMPLY WITH GOVERNING CODES. RACEWAYS SHALL BE OF A TYPE APPROPRIATE FOR THE USE AND LOCATION AND AS ALLOWED BY THE NEC AND LOCAL CODES. RACEWAY AND METAL CLAD CABLE SHALL BE INSTALLED CONCEALED EXCEPT AT EXPOSED CEILINGS, UTILITY SPACES, SURFACE MOUNTED CABINETS, MOTORS AND EQUIPMENT CONNECTIONS. UTILIZE SHORT EXTENSIONS OF FLEXIBLE CONDUIT, PROPERLY SUPPORTED, FOR CONNECTION OF ALL MOTORS AND OTHER EQUIPMENT SUBJECT TO VIBRATION. UTILIZE LIQUID–TIGHT FLEXIBLE CONDUIT FOR MOTOR AND EQUIPMENT CONNECTIONS IN WET LOCATIONS. INSTALL FITTINGS TO ACCOMMODATE EXPANSION AND CONTRACTION WHERE RACEWAY CROSSES CONTROL AND EXPANSION JOINTS. MINIMUM CONDUIT SIZE SHALL BE 1/2" FOR BRANCH CIRCUITS WITH MINIMUM OF 3/4" FOR HOMERUNS.

CONDUCTORS – ALL CONDUCTORS SHALL BE COPPER OR ALUMINUM AA–8000 SERIES ALLOY WITH TYPE XHHW, THWN, THW OR THHN INSULATION. CONDUCTORS INSTALLED IN UNHEATED SPACES OF THE BUILDING, UNDERGROUND, LOCATED OUTSIDE OF THE BUILDING, SERVICE ENTRANCE, OR FOR FEEDERS ARE REQUIRED TO HAVE TYPE XHHW 90 DEGREE C WIRING. WIRING IN LIGHTING FIXTURE CHANNELS SHALL BE COPPER WITH TYPE THHN OR OTHER INSULATION RATED 90 DEGREES C OR HIGHER, 600 VOLT. PULL ALL CONDUCTORS INTO THE RACEWAY AT THE SAME TIME. COLOR CODE CONDUCTORS AS FOLLOWS: 120/208 VOLT SYSTEMS: BLACK, RED, BLUE AND WHITE; 277/480 VOLT SYSTEMS: BROWN, ORANGE, YELLOW AND WHITE WITH AN IDENTIFIABLE COLORED STRIPE OR GRAY. USE PROPERLY SIZED INSULATED SPRING WIRE CONNECTORS WITH INSULATING CAPS FOR ALL CONDUCTORS #8 AWG AND SMALLER. TERMINATE #6 AWG AND LARGER CONDUCTORS WITH CRIMP OR COMPRESSION TYPE AND INSULATE WITH PROPERLY SIZED 600 VOLT RATED HEAT SHRINK TUBING TO EQUAL OR EXCEED THE INSULATION QUALITY OF THE TERMINATED CONDUCTOR.

OUTLET BOXES – PROVIDE OUTLET AND JUNCTION BOXES OF A TYPE SUITABLE FOR CONDITIONS WHERE INSTALLED AND AS PERMITTED BY THE NEC. PROVIDE CAST ALUMINUM OR FERALLOY TYPE BOXES WITH GASKETED COVER, THREADED HUBS AND NEMA 3R RATING FOR USE IN EXTERIOR OR WET LOCATIONS. PROVIDE OUTLET AND JUNCTION BOXES AS SHOWN ON THE DRAWINGS, AND AS REQUIRED FOR SPLICES, TAPS, WIRE PULLING, EQUIPMENT CONNECTIONS, DEVICE INSTALLATION AND CODE COMPLIANCE. BOXES IN RATED WALLS/CEILINGS SHALL BE RATED FOR RESPECTIVE ASSEMBLY. ADEQUATELY SUPPORT BOXES INDEPENDENTLY OF CONDUIT. COORDINATE MOUNTING HEIGHTS AND LOCATIONS OF ALL DEVICES MOUNTED ABOVE COUNTERS, BENCHES AND BACKSPLASHES WITH ARCHITECTURAL ELEVATIONS.

PANELBOARDS – PROVIDE DEAD–FRONT CIRCUIT BREAKER PANELBOARDS WITH BUS SIZE, MAIN CIRCUIT BREAKER, MAXIMUM INTERRUPT RATING, AND NUMBER AND SIZE OF BRANCH CIRCUITS AS SHOWN ON THE DRAWINGS. CABINETS SHALL BE 5 3/4 INCHES DEEP BY 20 INCHES WIDE MINIMUM. PROVIDE FLUSH OR SURFACE COVERS, AS NOTED ON THE DRAWINGS, WITH CONCEALED TRIM CLAMPS, CONCEALED HINGE AND LOCK. PANELBOARD SHALL BE FACTORY FINISHED IN MANUFACTURER'S STANDARD GRAY ENAMEL. PROVIDE NEW CIRCUIT BREAKERS AS SHOWN ON THE DRAWINGS, IN THESE SPECIFICATIONS, AND AS REQUIRED FOR THE WORK TO BE COMPLETED UNDER THIS PROJECT. CIRCUIT BREAKERS SHALL BE RATED FOR AVAILABLE FAULT CURRENT. MOLDED CASE CIRCUIT BREAKERS SHALL BE BOLT–ON THERMAL MAGNETIC TRIP TYPE WITH COMMON TRIP HANDLE FOR ALL POLES. PROVIDE CIRCUIT BREAKERS UL LISTED AS TYPE HCAR FOR AIR HANDLING/CONDITIONING CIRCUITS. PROVIDE UL LISTED BREAKERS AS SWD FOR LIGHTING CIRCUITS SWITCHED AT THE PANEL. PROVIDE ARC FAULT TYPE CIRCUIT BREAKERS FOR ALL OUTLETS INSTALLED IN THE R2 DORMITORY PORTIONS OF THE FACILITY, AS REQUIRED BY THE NEC AND AS INDICATED ON THE DRAWINGS. PROVIDE CIRCUIT BREAKERS SUPPLYING MULTIWIRE CIRCUITS WITH COMMON TRIP HANDLES OR AN APPROVED MEANS OF SIMULTANEOUSLY DISCONNECTING ALL UNGROUNDED CONDUCTORS. PROVIDE UL CLASS A GROUND FAULT INTERRUPTER CIRCUIT BREAKERS FOR GFCI CIRCUITS AS INDICATED ON THE DRAWINGS AND WHERE GFCI TYPE RECEPTACLES CANNOT BE LOCATED READILY ACCESSIBLE. WHERE CIRCUIT BREAKERS SUPPLY TRANSFORMERS, THE CIRCUIT BREAKER TRIP LEVELS SHALL BE COORDINATED WITH THE TRANSFORMER INRUSH TO AVOID NUISANCE TRIPPING. WHERE CIRCUIT BREAKERS ARE RATED OR CAN BE ADJUSTED TO 1200 AMPS OR GREATER, ARC ENERGY REDUCTION MEASURES AND DOCUMENTATION SHALL BE PROVIDED AS REQUIRED BY NEC 240.87. GROUP UNGROUNDED AND GROUNDED CONDUCTORS OF EACH MULTIWIRE BRANCH CIRCUIT WITHIN THE PANEL WITH AN APPROVED MEANS. INSTALL PANELBOARDS PLUMB WITH TOP OF CABINET NO MORE THAN 6'–6" ABOVE FINISHED FLOOR UNLESS OTHERWISE NOTED ON THE DRAWINGS. PROVIDE TYPED OR NEATLY HANDWRITTEN CIRCUIT DIRECTORIES FOR EACH PANELBOARD WITH DETAILED DESCRIPTIONS OF EACH CIRCUIT TO CLEARLY IDENTIFY EACH CIRCUITS' SPECIFIC USE AND DISTINGUISH IT FROM ALL OTHERS.

DRY TYPE TRANSFORMERS – PROVIDE DRY TYPE TRANSFORMERS FOR THE DISTRIBUTION SYSTEM AT LOCATIONS SHOWN ON THE DRAWINGS. TRANSFORMERS SHALL HAVE KVA AND VOLTAGE RATINGS AS INDICATED ON THE DRAWINGS. SECONDARY SHALL BE 120/208 VOLT 3 PHASE, 4–WIRE WYE. PRIMARY SHALL BE 480 VOLT 3–PHASE, 3–WIRE DELTA, 60 HERTZ. THE TRANSFORMER SHALL BE A LOW VOLTAGE ENERGY EFFICIENT, TP1, ENERGY START TYPE AND HAVE SIX (6) 2 ½% TAPS, TWO (2) ABOVE AND FOUR (4) BELOW NOMINAL PRIMARY RATING. THE TRANSFORMER SHALL BE UL LISTED WITH VENTILATED HOUSING AND STANDARD FULL TEMPERATURE RISE, CLASS 220 (H) INSULATION. THE TRANSFORMER SHALL BE SECURELY MOUNTED TO THE PAD. USE ADDITIONAL VIBRATION ISOLATORS AT POINTS OF MOUNTING TO CUT VIBRATION NOISES. USE LIQUID TIGHT FLEXIBLE CONDUIT ON PRIMARY AND SECONDARY FEEDS OF THE TRANSFORMERS. TRANSFORMERS SHALL BE LOCATED, SET, MOUNTED AND CONNECTED IN SUCH A MANNER TO KEEP NOISE LEVELS WITHIN THE SURROUNDING AMBIENT NOISE LEVELS AND MAINTAIN ALL CODE REQUIRED CLEARANCES. PROVIDE SEISMIC SUPPORTS AS REQUIRED BY LOCAL CODES. THE CORE OF THE TRANSFORMER SHALL BE VISIBLY GROUNDED TO ENCLOSURE BY MEANS OF A FLEXIBLE GROUNDING CONDUCTOR SIZED IN ACCORDANCE WITH APPLICABLE NEMA AND NEC STANDARDS.

STANDBY GENERATOR – THE ENGINE/GENERATOR IS TO BE DIESEL FUEL ENGINE DRIVEN WITH A SKIN–TIGHT WEATHERPROOF/ SOUND ATTENUATED ENCLOSURE, SUB–BASE TANK, FUEL PUMPS, PREHEAT ACCESSORIES, CHARGERS, BUILT–IN ELECTRICAL PANEL (PREWIRED), MAIN CIRCUIT BREAKER (ARC–REDUCTION IF 1200 AMPS OR OVER), CONTROL PANELS, REMOTE ANNUNCIATOR, AND ALL OTHER REQUIRED ACCESSORIES AS NECESSARY FOR A COMPLETE AND OPERABLE SYSTEM AS REQUIRED BY GOVERNING CODES AND AS APPROPRIATE FOR THE USE, LOCATION AND CONDITIONS, OUTDOORS IN WASILLA ALASKA. ENTIRE PACKAGE IS TO BE LISTED TO AS UL2200. INSTALLATION IS TO COMPLY WITH APPLICABLE STATE AND LOCAL CODES AS REQUIRED BY THE AHJ AS WELL AS THE MANUFACTURER'S INSTALLATION INSTRUCTIONS, AND IN COMPLIANCE WITH ARTICLES 445, 517, AND 702 OF THE NEC. PROVIDE STANDARD WARRANTY AND TESTING AS RECOMMENDED BY THE MANUFACTURER. PROVIDE WITH A UL LISTED PERMANENT, OUTDOOR LOAD BANK, RATED AS INDICATED AND AS APPROPRIATE, FOR THE APPLICATION WITH STANDARD INCREMENTAL LOAD STEPS, AUTOMATIC CONTROLS, COOLING FAN, HEATERS, AND ALL OTHER NECESSARY FEATURES FOR A COMPLETE AND OPERATIONAL SYSTEM.

AUTOMATIC TRANSFER SWITCH – TRANSFER SWITCH IS TO BE PROVIDED WITH RATINGS AS INDICATED ON THE DRAWINGS AND SHALL COMPLY WITH APPLICABLE NEC 702 AND NFPA 110 REQUIREMENTS. SWITCHES SHALL BE UL 1008 LISTED, COME WITH AUXILIARY CONTACTS, HAVE DIGITAL DISPLAYS WITH STATUS LED'S, POSITION INDICATOR LAMPS, AND ANY OTHER ADDITIONAL FEATURES AS REQUIRED BY APPLICABLE NFPA 110 SECTIONS.

RECEPTACLES – PROVIDE NEMA 5–20R COMMERCIAL GRADE DUPLEX GROUNDING TYPE RECEPTACLES. PROVIDE DUPLEX CONVENIENCE RECEPTACLES WITH CLASS "A" INTEGRAL GROUND FAULT CURRENT INTERRUPTER AND SPECIFIC–USE RECEPTACLES WHERE INDICATED ON THE DRAWINGS AND AS REQUIRED BY CODES. PROVIDE LISTED WEATHER RESISTANT TYPE RECEPTACLES WHERE LOCATED IN DAMP OR WET LOCATIONS. PROVIDE LISTED TAMPER RESISTANT RECEPTACLES WHERE REQUIRED BY THE NEC. UNLESS OTHERWISE NOTED ON THE DRAWINGS, INSTALL RECEPTACLES 18 INCHES ABOVE FINISH FLOOR, 4 INCHES ABOVE COUNTERS AND BACKSPLASHES WITH GROUNDING POLE ON BOTTOM. UNLESS OTHERWISE NOTED DIMENSIONS ARE TO CENTERLINE OF OUTLET. LOCATE GROUND FAULT CURRENT INTERRUPTER TYPE RECEPTACLES SO THAT THEY ARE READILY ACCESSIBLE AS REQUIRED BY THE NEC OR PROVIDE GFCI CIRCUIT BREAKERS IN THE PANEL.

SWITCHES/LIGHTING CONTROLS – THE CONTRACTOR IS TO PROVIDE VENDOR DESIGN, LAYOUT, PROGRAMMING, STARTUP, ETC FOR THE LIGHTING CONTROLS AS REQUIRED FOR COMPLETE AND PROPER OPERATION AS INDICATED AND INTENDED. LIGHTING CONTROLS SHALL BE SELECTED, PROVIDED, CONNECTED, AND PROGRAMMED TO PROVIDE ADEQUATE CONTROL AND COVERAGE OF THE SPACES CONTROLLED. PROVIDE LINE OR LOW–VOLTAGE SWITCHES AND OCCUPANCY SENSORS WITH RATINGS, DETECTION TYPES, AND COVERAGE AS APPROPRIATE FOR THE FIXTURES AND SPACES TO BE CONTROLLED. PROVIDE NEMA WD–1 20, UL NO. 20 LISTED, 20 AMPERE, 120/277 VOLT AC GENERAL USE SNAP SWITCH, WITH GROUNDING SCREW AND SELF GROUNDING CLIP, SINGLE POLE, DOUBLE POLE, THREE WAY OR FOUR WAY AS INDICATED ON THE DRAWINGS. PROVIDE LINE VOLTAGE RED LIGHTED NEON TOGGLE PILOT LIGHT SWITCHES AS INDICATED ON THE DRAWINGS. PROVIDE DIMMERS OF A TYPE COMPATIBLE WITH AND RATED FOR FIXTURES TO BE CONTROLLED. INSTALL WALL DIMMERS TO ACHIEVE FULL RATING AFTER DERATING FOR GANGING AS INSTRUCTED BY MANUFACTURER. DO NOT SHARE NEUTRAL CONDUCTOR ON LOAD SIDE OF DIMMERS. INSTALL SWITCHES 48 INCHES ABOVE FINISHED FLOOR, "OFF" POSITION DOWN. SWITCH BOXES SHALL INCLUDE A "GROUNDED CONDUCTOR" (NEUTRAL) OF THE CONTROLLED LIGHTING CIRCUIT AS REQUIRED BY NEC 404.2(C).

DEVICE PLATES – PROVIDE UL LISTED ONE PIECE ROUNDED EDGE FLUSH DEVICE PLATES OF STAINLESS STEEL WITH METAL, COUNTER SUNK SCREWS TO MATCH DEVICE PLATE. PROVIDE GALVANIZED DEVICE PLATES WHERE EXPOSED WIRING IS PERMITTED. PROVIDE WEATHERPROOF GASKETED STAINLESS STEEL WITH HINGED GASKETED DEVICE COVERS FOR ALL OUTLETS IN WET LOCATIONS OR ON THE EXTERIOR OF THE BUILDING. PROVIDE METALLIC 'EXTRA DUTY', 'WET WHILE IN USE' WEATHERPROOF COVERS WHEN MANDATED BY THE AUTHORITY HAVING JURISDICTION.

LIGHTING EQUIPMENT – PROVIDE AND INSTALL ALL LIGHTING EQUIPMENT OR APPROVED EQUAL AS SHOWN ON THE DRAWINGS AND DESCRIBED IN THE DRAWINGS. PROVIDE LIGHTING EQUIPMENT AS A COMPLETE SYSTEM, WIRED, ASSEMBLED, WITH PROPER FLANGES, MOUNTING SUPPORTS, HARDWARE, ETC. ALL LIGHTING EQUIPMENT TO BE INSTALLED IN LAY–IN TYPE CEILINGS SHALL BE PHYSICALLY ATTACHED TO THE GRID SYSTEM AND PROVIDED WITH SAFETY SUPPORTS, CAPABLE OF SUPPORTING 200 POUNDS, SECURELY FASTENED TO A MINIMUM OF TWO OPPOSING CORNERS OF THE LIGHT FIXTURE AND THE BUILDING STRUCTURE TO SUPPORT THE FIXTURE IN THE EVENT OF A CEILING SUPPORT FAILURE.

EQUIPMENT CONNECTIONS – PROVIDE AND INSTALL WIRING AND CONNECTIONS OF EQUIPMENT REQUIRING ELECTRICAL POWER BUT SPECIFIED UNDER OTHER DIVISIONS OF THE PROJECT. EQUIPMENT SHALL INCLUDE BUT IS NOT LIMITED TO OVERHEAD DOORS, FOOD SERVICE EQUIPMENT, MOTORS, PUMPS, WATER HEATERS, HVAC EQUIPMENT, EXERCISE EQUIPMENT, LAUNDRY EQUIPMENT, FIRESTATION EQUIPMENT ETC. REVIEW EQUIPMENT SUBMITTALS PRIOR TO INSTALLATION AND ELECTRICAL ROUGH–IN AND VERIFY THE LOCATION, SIZE, TYPE OF CONNECTIONS, AND THAT THE EQUIPMENT IS READY FOR ELECTRICAL CONNECTION. MAKE WIRING CONNECTIONS IN THE CONTROL PANEL OR IN THE WIRING COMPARTMENT OF THE EQUIPMENT IN ACCORDANCE WITH THE MANUFACTURER'S INSTRUCTIONS. PROVIDE INTERCONNECTING WIRING AND LOCAL DISCONNECTS WHERE REQUIRED.

DISCONNECT SWITCHES/MOTOR STARTERS – PROVIDE DISCONNECTS AND MOTOR STARTERS WHERE APPROPRIATE AND AS REQUIRED. SWITCHES AND STARTERS SHALL BE SIZED, RATED, AND APPROPRIATE FOR LOADS CONTROLLED AND SUITABLE FOR LOCATIONS TO BE INSTALLED. DISCONNECTS SHALL BE LOCKABLE WHERE REQUIRED BY THE NEC. PROVIDE FUSED DISCONNECTS WHERE NEEDED OR REQUIRED. INDUCTION MOTOR LOADS LESS THAN ONE HORSEPOWER ARE TO UTILIZE FRACTIONAL HORSEPOWER MOTOR STARTERS WITH THERMAL OVERLOAD UNIT, RED PILOT LIGHT, AND TOGGLE OPERATOR. INDUCTOR MOTOR LOADS RATED MORE THAN ONE HORSEPOWER ARE TO UTILIZE COMBINATION MOTOR STARTER/DISCONNECTS WITH FULL VOLTAGE STARTER, MOTOR CIRCUIT PROTECTOR DISCONNECT. THREE PHASE MOTOR STARTERS ARE TO INCLUDE A POWER MONITOR FOR PHASE LOSS, PHASE REVERSAL, AND LOW VOLTAGE PROTECTION. LARGE MOTORS OVER 5 HORSEPOWER ARE TO UTILIZE REDUCED VOLTAGE STARTERS OR VFD'S.

FRACTIONAL HORSEPOWER MANUAL STARTER – NEMA ICS 2; AC GENERAL–PURPOSE CLASS A MANUALLY OPERATED FULL–VOLTAGE CONTROLLER FOR FRACTIONAL HORSEPOWER INDUCTION MOTORS WITH THE NUMBER OF POLES AS REQUIRED BY THE LOAD SERVED, THERMAL OVERLOAD UNIT(S), RED PILOT LIGHT, AND TOGGLE OPERATOR.

SEISMIC RESTRAINTS – PROVIDE SEISMIC BRACING AND SUPPORT OF ALL ELECTRICAL EQUIPMENT AS REQUIRED BY THE IBC AND OTHER APPLICABLE CODES. EQUIPMENT TO BE BRACED AND SUPPORTED SHALL INCLUDE BUT IS NOT LIMITED TO SERVICE EQUIPMENT, LIGHTS, PANELS, CONDUIT, ETC. WHEN REQUIRED BY THE LOCAL JURISDICTION, THE CONTRACTOR SHALL BE RESPONSIBLE FOR OBTAINING STRUCTURAL RESTRAINTS DESIGNED BY A PROFESSIONAL STRUCTURAL ENGINEER LICENSED BY THE STATE OF ALASKA.

PENETRATIONS OF FIRE BARRIERS – ALL ELECTRICAL PENETRATIONS THROUGH FIRE RATED BARRIERS SHALL BE SEALED IN ACCORDANCE WITH NEC ARTICLE 300.21 AND THE FOLLOWING:

ALL HOLES OR VOIDS CREATED TO EXTEND ELECTRICAL SYSTEMS THROUGH FIRE RATED FLOORS, WALLS OR CEILING SHALL BE SEALED WITH AN ASBESTOS–FREE INTUMESCENT FIRE STOPPING MATERIAL CAPABLE OF EXPANDING 8 TO 10 TIMES WHEN EXPOSED TO TEMPERATURES 250 DEGREES F OR HIGHER. MATERIALS SHALL BE SUITABLE FOR THE FIRE STOPPING OF PENETRATIONS MADE BY STEEL, GLASS, PLASTIC AND SHALL BE CAPABLE OF MAINTAINING AN EFFECTIVE BARRIER AGAINST FLAME, SMOKE AND GASES IN COMPLIANCE WITH THE REQUIREMENTS OF ASTM E814, UL 1479 AND THE UL FIRE RESISTANCE DIRECTORY REQUIREMENTS FOR THROUGH–PENETRATION FIRESTOP DEVICES (XHCR). THE RATING OF THE FIRE STOPS SHALL BE THE SAME AS THE TIME–RATED FLOOR, WALL OR CEILING ASSEMBLY. INSTALL FIRE STOPPING MATERIALS IN ACCORDANCE WITH THE MANUFACTURER'S INSTRUCTIONS. UNLESS PROTECTED FROM POSSIBLE LOADING OR TRAFFIC, INSTALL FIRE STOPPING MATERIALS IN FLOORS HAVING VOID OPENINGS OF FOUR (4) INCHES OR MORE TO SUPPORT THE SAME FLOOR LOAD REQUIREMENTS AS THE SURROUNDING FLOOR."

STATE OF ALASKA
49TH
BRETT A. BINGHAM
EE-10821
5-9-18
REGISTERED PROFESSIONAL ENGINEER

Burkhart Croft
ARCHITECTS LLC
880 N Street Suite 302 | Anchorage Alaska 99501
T: 907.929.9334 | www.burkhart-croft.com

HZA
ENGINEERING SOLUTIONS
HZA Engineering, LLC
113 W. Northern Lights Blvd., Suite 240
Anchorage, Alaska 99503
Tel. (907) 562-1012 Fax (907) 562-1013
AK Corporation # AECL081

MATANUSKA-SUSITNA BOROUGH

MSB FIRE STATION 6-2

WASILLA, ALASKA

DATE:	5/9/2018
DRAWN:	DJL
CHECKED:	BAB
PROJECT:	2017.064.0
DRAWING TITLE:	SPECIFICATIONS
REVISIONS:	
SHEET NO:	**E0.3**

GENERAL NOTES

1. THE CONTRACTOR SHALL COORDINATE WITH MEA FOR REMOVAL AND RELOCATION OR BURIAL OF EXISTING UTILITY POLES AND LINES AT THE FRONT OF THE SITE TO ACCOMMODATE IMPROVED TRAFFIC FLOW AND TO PROVIDE IMPROVED AESTHETICS.
2. COORDINATE WITH POWER AND TELECOM UTILITY FOR REMOVAL AND RELOCATION OF EXISTING UTILITY LINES AS NECESSARY FOR NEW CONSTRUCTION.
3. CONTRACTOR TO REMOVE EXISTING LIGHT POLES, WELL PUMPS, PUMP TEST STATION ASSOCIATED WITH UNDERGROUND TANKS, TRAINING TOWER, ELECTRICAL SERVICE, ETC. IN PREPARATION FOR CONSTRUCTION OF NEW FACILITY.

SHEET NOTES

INDICATED BY: (#)

1. APPROXIMATE LOCATION OF TELECOMMUNICATION BACKBOARD IN FIRST FLOOR TELECOMM ROOM. BACKBOARD SHALL COMPLY WITH UTILITY REQUIREMENTS.
2. THE CONTRACTOR SHALL COORDINATE WITH LOCAL TELECOMMUNICATION COMPANY AND INSTALL TWO 2" CONDUITS WITH PULL STRING FROM INTERIOR MAIN TELEPHONE BACKBOARD TO THE UTILITY PEDESTALS. LOCATIONS SHOWN ARE ASSUMED, THE CONTRACTOR WILL NEED TO COORDINATE EXACT LOCATION, ROUTING AND REQUIREMENTS WITH THE UTILITY COMPANY. INSTALL IN–GRADE HANDHOLES OUTSIDE THE BUILDING FOOTPRINT WHEN NECESSARY.
3. FLAGPOLE LIGHT– PROVIDE POWER CONNECTIONS FOR GROUND MOUNTED LIGHT FIXTURE TYPE 'L' AND ROUTE THROUGH A PHOTOCELL FOR CONTROL. AIM FIXTURE TO ILLUMINATE FLAG. COORDINATE EXACT LOCATIONS OF FIXTURE FOR MOUNTING TO CONCRETE.
4. CONTRACTOR TO PROVIDE AND INSTALL CONCRETE PAD SUITABLE FOR MOUNTING OF THE GENERATOR AND LOAD BANK. COORDINATE WITH OWNER AND EQUIPMENT MANUFACTURERS FOR SPECIFIC REQUIREMENTS.
5. GENERATOR ASSOCIATED LOADS SUCH AS BATTERY CHARGER; COOLANT HEATER; MISCELLANEOUS HEATERS (BATTERY, ALTERNATOR ANTI–CONDENSATION, CONTROL PANEL ANTI–CONDENSATION, LUBE OIL, ETC); FUEL PUMPS; ETC. AS APPROPRIATE SHALL BE PRE–WIRED TO INTEGRAL GENERATOR PANEL.
6. IN ADDITION TO CONDUIT FOR POWER WIRING PROVIDE ADDITIONAL 2" CONDUIT AND CABLING TO TELECOMM ROOM FOR CONTROL OF PROGRAMMABLE SIGN. VERIFY AND COORDINATE CONDUIT SIZE, LOCATIONS, AND REQUIREMENTS WITH SIGN MANUFACTURER AND OWNER.
7. INTELLIGENT HEAD BOLT OUTLET (IPLC OR EQUAL), WITH 20 AMP 120V WEATHER RESISTANT DUPLEX RECEPTACLE, SPLIT WIRED FOR 2 CIRCUITS AND WEATHERPROOF WHILE–IN–USE COVER. EACH CIRCUIT IS TO BE FED FROM AND PROTECTED BY 5mA GFCI BLANK OUTLET LOCATED INDOORS. SEE ALSO E3.1.
8. PROPOSED LOCATION OF NEW GENERATOR SHUNT TRIP DISCONNECT. COORDINATE EXACT LOCATION WITH AHJ TAKING INTO CONSIDERATION ANY DISTANCE LIMITATIONS ASSOCIATED WITH THE SHUNT TRIP EQUIPMENT.
9. WELL PUMP. PROVIDE WITH LOCKING CIRCUIT BREAKER AND WIRING CONNECTION FROM WATER WELL PUMP CONTROLLER IN NEW BUILDING. COORDINATE WITH CIVIL FOR ADDITIONAL REQUIREMENTS AND CONNECTIONS.
10. LIFT STATION TANK AND DUPLEX PUMPS. COORDINATE WITH CIVIL AND EQUIPMENT MANUFACTURER FOR EXACT LOCATIONS AND REQUIREMENTS. ENTIRE LIFT STATION WELL CONSIDERED AS CLASS 1, DIVISION 1 HAZARDOUS LOCATION. ALL SYSTEMS, DEVICES, WIRING, AND CONNECTIONS SHALL BE IN CONFORMANCE WITH AND INSTALLED IN COMPLIANCE WITH ALL REQUIREMENTS OUTLINED IN THE NATIONAL ELECTRICAL CODE, ARTICLES 500 AND 501 AS WELL AS LOCAL AND STATE OF ALASKA SPECIFICATIONS AND THE MANUFACTURER'S INSTALLATION INSTRUCTIONS. PROVIDE SEAL–OFFS AS APPROPRIATE AND AS REQUIRED BY GOVERNING CODES.
11. APPROXIMATE ROUTING OF HEATTRACE IN RAINLEADER PIPING FROM BUILDING TO DRYWELL. REFERENCE CIVIL FOR EXACT LOCATION, LENGTHS, AND ROUTING.
12. ROUTE EXTERIOR LIGHTING CIRCUITS THROUGH A CONTACTOR AND PHOTOCELL FOR CONTROL. PROVIDE CONNECTIONS AS REQUIRED TO DDC FOR ADDITIONAL CONTROL.
13. ROUTE EXTERIOR LIGHTING CIRCUITS THROUGH A SEPARATE CONTACTOR AND PHOTOCELL FOR CONTROL. PROVIDE CONNECTIONS AS REQUIRED TO DDC FOR ADDITIONAL CONTROL.
14. PROVIDE MOUNTING AND PROTECTION AS REQUIRED FOR EXTERIOR COMBINATION TRANSFORMER/PANEL. COORDINATE EXACT LOCATION WITH USER.
15. PROVIDE POWER AND CONNECTIONS AS REQUIRED FOR CONNECTION TO MOTORIZED GATE, GATE IS ASSUMED TO BE 3/4HP 120V. CONFIRM ELECTRICAL REQUIREMENTS AND EXACT LOCATION OF GATE WITH OWNER AND CIVIL BEFORE INSTALLATION.
16. EXTERIOR WALL SIGN, ROUTE BRANCH CIRCUIT THROUGH A PHOTOCELL FOR AUTOMATIC CONTROL.
17. AREA AROUND GASOLINE TANKS AND DISPENSERS IS A CLASSIFIED LOCATION. REFERENCE AREA CLASSIFICATION PLAN AND NOTES ON SHEET E1.2. ALL EQUIPMENT, MATERIALS, AND INSTALLATION SHALL BE APPROPRIATE FOR THE CONDITIONS AND LOCATIONS. THE CONTRACTOR SHALL INSTALL ALL ELECTRICAL SYSTEMS INCLUDING BUT NOT LIMITED TO POWER CONNECTIONS, CONTROL CONNECTIONS, GROUNDING AND BONDING, EMERGENCY DISCONNECTS, ETC. AS REQUIRED BY THE MANUFACTURER'S INSTRUCTIONS AS WELL AS THE REQUIREMENTS OUTLINED IN THE NEC, ARTICLES 500, 501, 514, AND 515. COORDINATE REQUIREMENTS FOR EXACT EQUIPMENT TO BE PROVIDED. PUMPS SHALL BE CONTROLLED FROM A LOCKABLE DISCONNECT INSIDE THE BUILDING.
18. CONTRACTOR TO PROVIDE NECESSARY APPURTENANCES SUCH AS NETWORK SWITCH, POWER OVER ETHERNET INJECTOR, FIBER, ETC. AS MAY BE NEEDED FOR CAMERA SURVEILLANCE AT THIS LOCATION.
19. LIFT STATION TANK, WITH (2) 1/2HP 208V 3ø PUMPS. PROVIDE POWER AND CONTROL CONNECTIONS BETWEEN CONTROL PANEL, PUMPS, AND FLOATS AS REQUIRED FOR OPERATION, INCLUDING ANY NECESSARY CONDUIT AND WIRING FOR A REMOTE ALARM IF A REMOTE ALARM IS PROVIDED. COORDINATE WITH CIVIL FOR LOCATIONS AND REQUIREMENTS.
20. PROVIDE POWER AND CONTROL CONNECTIONS TO LOAD BANK. ASSUMED LOADS AND BRANCH CIRCUITRY (COPPER) ARE AS FOLLOWS (CONTRACTOR TO CONFIRM): FAN 5HP 480V 3ø, ¾"C 3#10,1#10 GND; CONTROL POWER 500VA 480V 3ø, ¾"C 3#10,1#10 GND; HEATER 20A 120V, ½"C 2#10,1#10 GND.

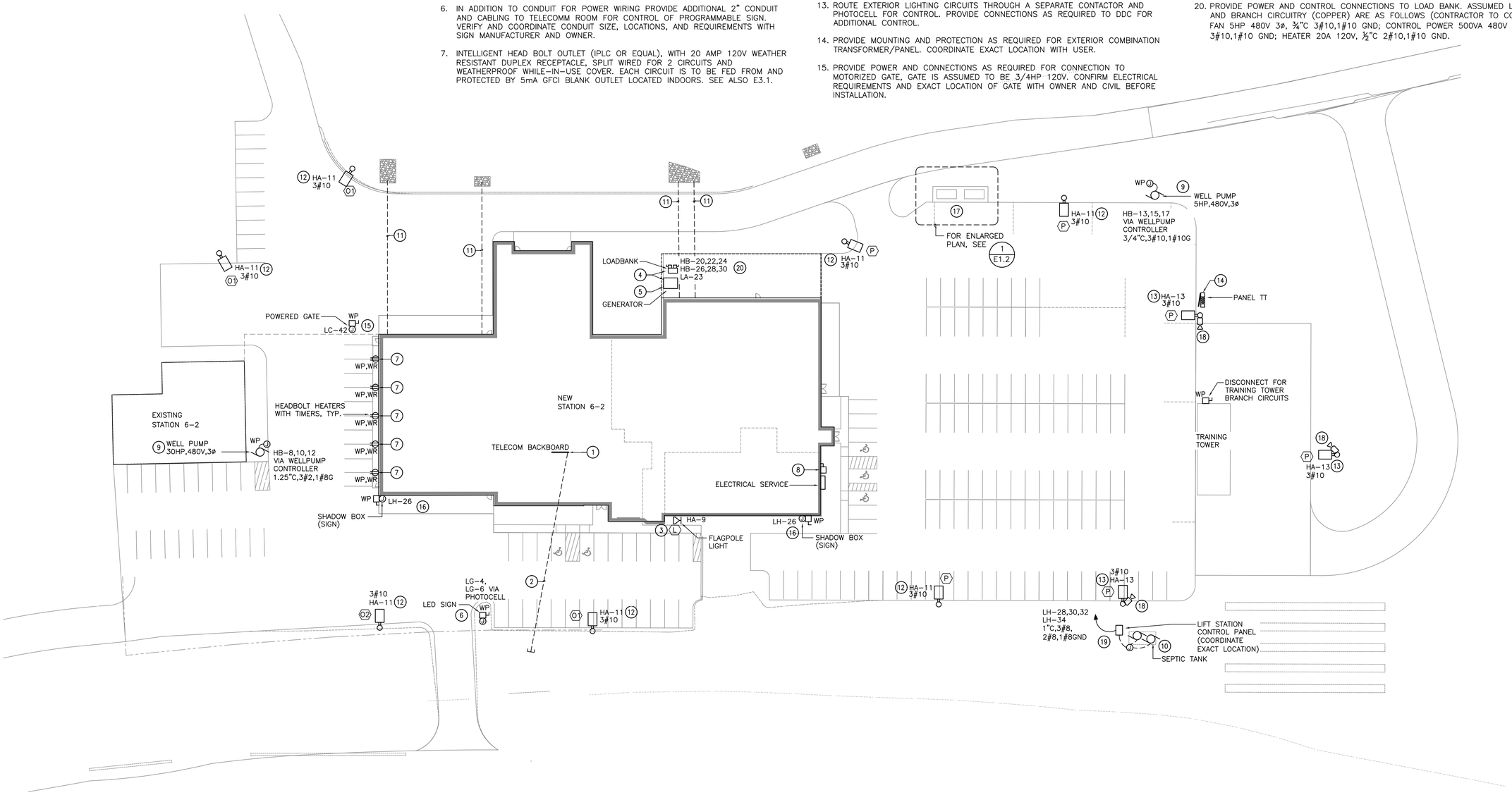

1 E1.1 ELECTRICAL SITE PLAN

SCALE: 1/32" = 1'-0"

STATE OF ALASKA 49TH BRETT A. BINGHAM EE-10821 5-9-18 REGISTERED PROFESSIONAL ENGINEER

Burkhart Croft ARCHITECTS LLC
880 N Street Suite 302 | Anchorage Alaska 99501
T: 907.929.9334 | www.burkhart-croft.com

HZA ENGINEERING SOLUTIONS
HZA Engineering, LLC
113 W. Northern Lights Blvd., Suite 240
Anchorage, Alaska 99503
Tel. (907) 562-1012 Fax (907) 562-1013
AK Corporation # AECL081

MATANUSKA-SUSITNA BOROUGH

MSB FIRE STATION 6-2

WASILLA, ALASKA

DATE:	5/9/2018
DRAWN:	DJL
CHECKED:	BAB
PROJECT:	2017.064.0
DRAWING TITLE:	ELECTRICAL SITE PLAN
REVISIONS:	
SHEET NO:	**E1.1**

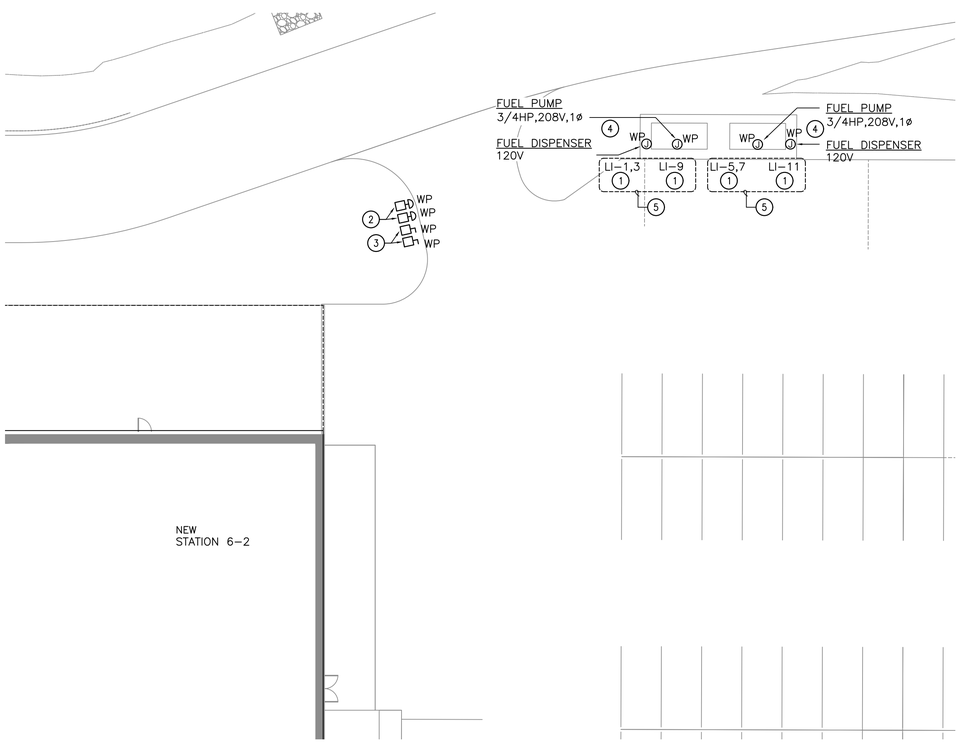

1 E1.2 ENLARGED ELECTRICAL SITE PLAN - FUEL TANK DISPENSERS

SCALE: 1/16" = 1'-0"

OUTDOOR AREA CLASSIFICATION NOTES:

THE SITE CONTAINS TWO MOTOR FUEL STORAGE AND DISPENSING TANKS. ONE TANK WILL CONTAIN CLASS I LIQUIDS (GASOLINE) HAVING A FLASH POINT BELOW 100F AND THE OTHER WILL CONTAIN CLASS II (DIESEL) LIQUIDS WITH A FLASH POINT AT OR ABOVE 100F.

THE AREA OF THE OUTDOOR GASOLINE FUEL TANK IS CLASSIFIED BY THE NATIONAL ELECTRICAL CODE ARTICLES 514.3 AND 515.3 AS FOLLOWS:

CLASS I DIVISION 1
- INSIDE TANK ENCLOSURE.
- AREA INSIDE VENT PIPING OR OPENING.
- WITHIN 5' OF OPEN END OF VENT OR FILL OPENING, EXTENDING IN ALL DIRECTIONS.
- ENTIRE AREA WITHIN A PIT OR SUMP IF ANY PART IS WITHIN A DIVISION 1 OR 2 CLASSIFIED LOCATION
- ENTIRE SPACE WITHIN AND UNDER DISPENSER PIT OR CONTAINMENT.

CLASS I DIVISION 2
- WITHIN 10' IN ALL DIRECTIONS FROM TANK ENCLOSURE.
- AREA WITHIN 5' TO 10' FROM OPEN END OF VENT OR FILL OPENING EXTENDING IN ALL DIRECTIONS.
- WITHIN 18" HORIZONTALLY IN ALL DIRECTIONS OF DISPENSERS, AND DOWN TO GRADE.
- UP TO 18" ABOVE GRADE LEVEL WITHIN 20' OF ANY EDGE OF OUTDOOR DISPENSER
- WITHIN 3' OF ANY EDGE OF FUEL PUMP EXTENDING IN ALL DIRECTIONS
- UP TO 18" ABOVE GRADE LEVEL WITHIN 10' OF ANY EDGE OF REMOTE OUTDOOR FUEL PUMP

THESE TANKS ARE NEW ABOVE GROUND BULK DISPENSING VESSELS WITH VENTS, FILL OPENINGS, AND INTEGRAL PUMPS. THE CONTRACTOR SHALL INSTALL ALL WORK IN ACCORDANCE WITH ANY AND ALL APPLICABLE ARTICLES IN NEC CHAPTER 5, SPECIFICALLY ARTICLES 500, 501, 514 AND 515.

THESE DIAGRAMS ARE NOT TO SCALE, THEY ARE SCHEMATIC AND DO NOT SHOW EXACT LOCATIONS OF VENTS, FILL OPENINGS, AND DISPENSERS. THE CONTRACTOR SHALL VERIFY THE EXACT LOCATIONS OF ALL VENTS, FILL OPENINGS, AND DISPENSERS AND EXTEND THE CLASSIFICATION AREA AROUND EACH AS REQUIRED.

AREA CLASSIFICATION LEGEND

CLASS 1 DIVISION 1 PER NEC 514.3(B)(1)

CLASS 1 DIVISION 2 PER NEC 514.3(B)(1)

SYSTEMS AND DEVICES SHALL BE INSTALLED IN COMPLIANCE WITH ALL REQUIREMENTS OUTLINED IN THE NATIONAL ELECTRICAL CODE, ARTICLES 500, 501, 514 AND 515.

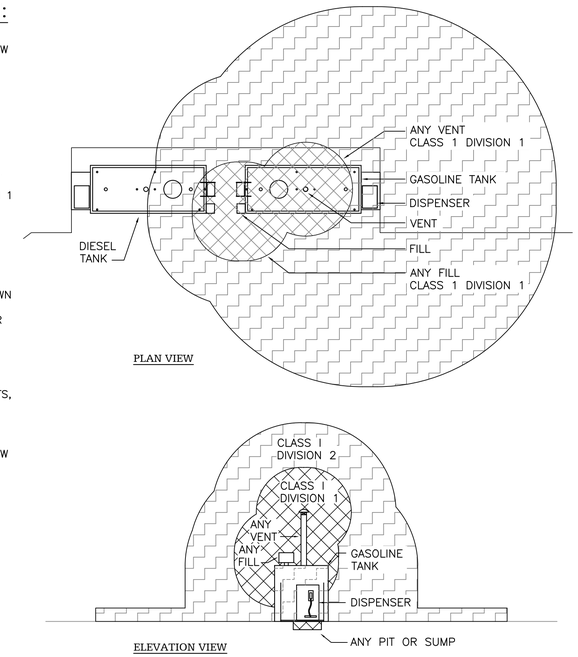

2 E1.2 ELECTRICAL AREA CLASSIFICATION PLAN

SCALE: NOT TO SCALE

GENERAL NOTES

1. AREA AROUND GASOLINE FUEL TANKS AND DISPENSERS IS A CLASSIFIED LOCATION. REFERENCE AREA CLASSIFICATION PLAN AND NOTES. ALL EQUIPMENT, MATERIALS, AND INSTALLATION SHALL BE APPROPRIATE FOR THE CONDITIONS AND LOCATIONS. THE CONTRACTOR SHALL INSTALL ALL ELECTRICAL SYSTEMS INCLUDING BUT NOT LIMITED TO POWER CONNECTIONS, CONTROL CONNECTIONS, GROUNDING AND BONDING, EMERGENCY DISCONNECTS, ETC., AS REQUIRED BY THE MANUFACTURER'S INSTRUCTIONS AS WELL AS THE REQUIREMENTS OUTLINED IN THE NATIONAL ELECTRICAL CODE, ARTICLES 500, 501, 514, AND 515. COORDINATE REQUIREMENTS FOR EXACT EQUIPMENT TO BE PROVIDED. PUMPS SHALL BE CONTROLLED FROM A LOCKABLE DISCONNECT INSIDE THE BUILDING.
2. THE CONTRACTOR SHALL COORDINATE WITH TANK/DISPENSER SUPPLIER AND PROVIDE ALL NECESSARY APPURTENANCES, WIRING, AND CONNECTIONS AS REQUIRED FOR COMPLETE AND OPERATIONAL SYSTEMS AS INTENDED AND AS REQUIRED BY THE MANUFACTURERS INSTALLATION INSTRUCTIONS AND GOVERNING CODES.

SHEET NOTES

INDICATED BY: #

1. BRANCH CIRCUITS FOR THE FUEL PUMPS AND DISPENSERS ARE TO BE PROVIDED, WITH CONNECTIONS TO DISCONNECTS, EMERGENCY DISCONNECTS, CONTROLLERS, AND OTHER EQUIPMENT AS REQUIRED. IN ADDITION TO ANY REQUIRED DISCONNECTS ON SITE, EACH TANK/DISPENSER SHALL BE CONTROLLED BY AN ADDITIONAL LOCKING DISCONNECT (WITH APPROPRIATE RATING AND CHARACTERISTICS) TO BE LOCATED INSIDE THE BUILDING (COORDINATE WITH USER FOR EXACT LOCATION), AS AN "ON/OFF" MEANS OF CONTROL TO LIMIT USE OF THE FUEL TANKS/DISPENSERS ONLY TO "AUTHORIZED" USERS.
2. PROVIDE EMERGENCY DISCONNECTS (REMOTE) WITH SUITABLE RATINGS AND COMPONENTS FOR EQUIPMENT TO BE USED, FOR THE FUEL DISPENSER STATIONS TO SIMULTANEOUSLY DISCONNECT FROM THE SOURCE OF SUPPLY, ALL CONDUCTORS OF THE CIRCUIT INCLUDING THE GROUNDED CONDUCTOR PER NEC 514.11. FIELD LOCATE AS REQUIRED. PROVIDE RIGID ENGRAVED SIGNAGE OF LAMINATED PLASTIC AT THE DISCONNECT TO READ "EMERGENCY FUEL PUMP/DISPENSER SHUTOFF SWITCH". COORDINATE EXACT LOCATION WITH A.H.J. PROVIDE MOUNTING AS REQUIRED.
3. PROVIDE DISCONNECTS WITH SUITABLE RATINGS AND COMPONENTS FOR EQUIPMENT TO BE USED, FOR THE FUEL DISPENSER STATION TO SIMULTANEOUSLY DISCONNECT FROM THE SOURCE OF SUPPLY, ALL CONDUCTORS OF THE CIRCUIT INCLUDING THE GROUNDED CONDUCTOR AND BE CAPABLE OF BEING LOCKED IN THE OPEN POSITION PER NEC 514.13. PROVIDE RIGID ENGRAVED SIGNAGE OF LAMINATED PLASTIC AT EACH DISCONNECT TO IDENTIFY THE SPECIFIC LOAD SERVED. PROVIDE MOUNTING AS REQUIRED.
4. PROVIDE ADDITIONAL EMERGENCY CONTROLS AT DISPENSERS IF REQUIRED.
5. PROVIDE BRANCH CIRCUITS OF 1" CONDUIT 2#8, 2#8, 1#8 GROUND.

STATE OF ALASKA 49TH BRETT A. BINGHAM EE-10821 5-9-18 REGISTERED PROFESSIONAL ENGINEER

Burkhart Croft ARCHITECTS LLC
880 N Street Suite 302 | Anchorage Alaska 99501
T: 907.929.9334 | www.burkhart-croft.com

HZA ENGINEERING SOLUTIONS
HZA Engineering, LLC
113 W. Northern Lights Blvd., Suite 240
Anchorage, Alaska 99503
Tel. (907) 562-1012 Fax (907) 562-1013
AK Corporation # AECL081

MATANUSKA-SUSITNA BOROUGH

MSB FIRE STATION 6-2

WASILLA, ALASKA

DATE:	5/9/2018
DRAWN:	DJL
CHECKED:	BAB
PROJECT:	2017.064.0
DRAWING TITLE:	ELECTRICAL AREA CLASSIFICATION PLAN
REVISIONS:	
SHEET NO:	**E1.2**

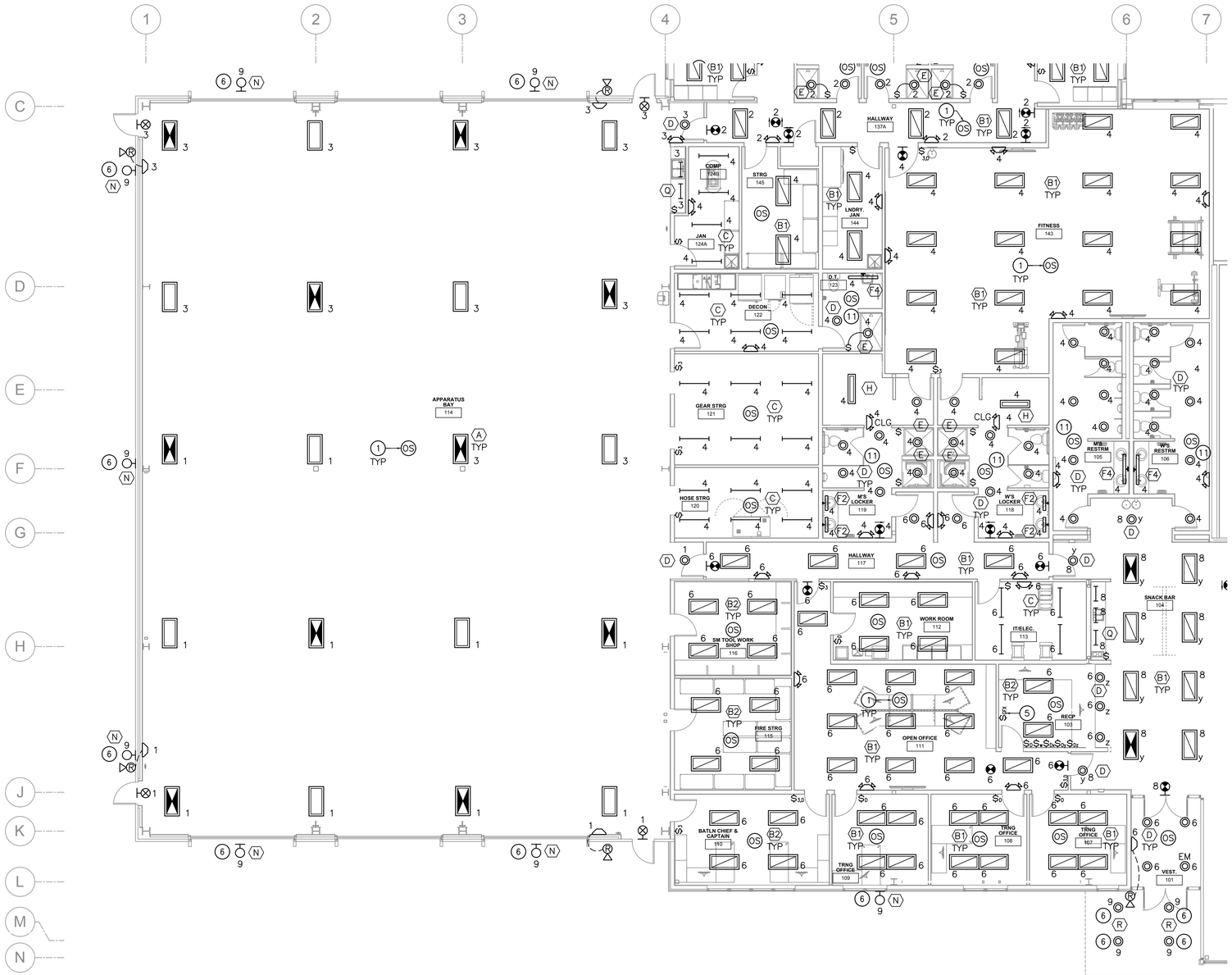

1 E2.1 LIGHTING PLAN - AREA A

SCALE: 1/8" = 1'-0"

GENERAL NOTES

1. PROVIDE SEISMIC BRACING AND SUPPORT FOR ELECTRICAL LIGHTS AND EQUIPMENT WHERE REQUIRED BY THE IBC AND OTHER APPLICABLE CODES.
2. ALTHOUGH NOT SHOWN, AND UNLESS CONDUCTORS ENTER THE BOX THROUGH A RACEWAY, SWITCH BOXES SHALL INCLUDE A "GROUNDED CONDUCTOR" (NEUTRAL) OF THE CONTROLLED LIGHTING CIRCUIT AS REQUIRED BY NEC 404.2(C).
3. CONNECT EMERGENCY LIGHT BATTERIES AND EXIT SIGNAGE TO UNSWITCHED "HOT" LEG OF LOCAL AREA LIGHTING BRANCH CIRCUIT.
4. LIGHTING CONTROLS SHALL BE SELECTED, PROVIDED, CONNECTED, AND PROGRAMMED TO PROVIDE ADEQUATE CONTROL AND COVERAGE OF THE RENOVATED SPACES CONTROLLED. REFERENCE LIGHTING CONTROL SCHEDULE ON SHEET E0.2.
5. ALTHOUGH NOT SHOWN, THE CONTRACTOR SHALL PROVIDE LINE AND/OR LOW VOLTAGE CONTROL WIRING AS REQUIRED FOR LIGHT FIXTURE SWITCHING CONTROLS, DIMMING, ETC.
6. CONTRACTOR TO VERIFY LOCATIONS OF ALL SWITCHES WITH TENANT PRIOR TO ROUGH–IN.
7. COORDINATE EXACT LOCATIONS OF LIGHT FIXTURES TO AVOID CONFLICTS WITH MECHANICAL DUCTWORK, PIPING, ARCHITECTURAL AND STRUCTURAL ELEMENTS.
8. LIGHTING IN EACH HALLWAY IS TO BE CONTROLLED AS ONE ZONE BY OCCUPANCY SENSORS. DETECTION OF ANY ONE OCCUPANCY SENSOR SHALL ILLUMINATE ALL FIXTURES IN THAT PARTICULAR HALL. PROVIDE ADDITIONAL POWER PACKS AND PROVIDE CONNECTIONS AS INDICATED BY MANUFACTURER'S WIRING DIAGRAMS.
9. ALL LIGHTING BRANCH CIRCUITRY IS TO BE CIRCUITED TO PANEL HA UNLESS OTHERWISE NOTED.

SHEET NOTES

INDICATED BY: (#)

THE FOLLOWING SHEET NOTES ARE A COMPREHENSIVE LIST APPLYING TO SHEETS E2.1, E2.2, E2.3, AND E2.4. NOT ALL NOTES APPLY TO EVERY SHEET.

1. TYPE AND QUANTITY OF OCCUPANCY SENSORS FOR CONTROL OF AREA LIGHTING IS TO BE DESIGNED BY CONTRACTOR'S VENDOR, TYPICAL OF ALL.
2. COORDINATE FINAL LOCATION OF LIGHTING FIXTURES IN THIS AREA TO MAINTAIN ACCESSIBILITY AND AVOID CONFLICT WITH MECHANICAL AND STRUCTURAL SYSTEMS.
3. CLASSROOM LIGHTING TO HAVE FUNCTIONALLY TO BE CONTROLLED AS 3 SEPARATE SPACES EACH WITH 2 ZONES, OR ANY COMBINATION OF ZONES WHEN DIVIDING WALLS ARE OPEN OR CLOSED.
4. LOWER CASE LETTER INDICATES SWITCHING CONTROL CORRESPONDING TO CONTROLS LOCATED AT WALL AND CEILING, TYPICAL WHERE SHOWN.
5. PROPOSED LOCATION OF LIGHTING NETWORK CONTROLLER & ETHERNET CONNECTION.
6. EXTERIOR LIGHTING IS TO BE ROUTED THROUGH A CONTACTOR FOR PHOTOCELL CONTROL. PROVIDE CONNECTIONS TO DDC FOR ADDITIONAL CONTROL.
7. CONNECT LIGHT FIXTURES IN THIS ROOM TO PILOT LIGHT SWITCH ABOVE FOR CONTROL.
8. COORDINATE EXACT LOCATION OF LIGHT FIXTURES TO AVOID CONFLICTS WITH MECHANICAL DUCTWORK IN THIS LOCATION. LIGHTS CAN BE PENDANT OR SURFACE MOUNTED AS NEEDED.
9. COORDINATE EXACT LOCATION OF LIGHT WITH ARCHITECTURAL FEATURE. LIGHT TO BE MOUNTED AT TOP OF STRUCTURE.
10. SWITCH FOR CONNECTION TO AND CONTROL OF SUMP PUMP ROOM LIGHTING BELOW.
11. OCCUPANCY SENSOR IS TO CONTROL 277V LIGHTS AS WELL AS 120V EXHAUST FAN (FOR ADDITIONAL 15 MINUTES). SEE POWER PLANS.

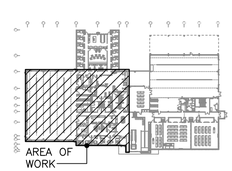

KEYPLAN

STATE OF ALASKA 49TH BRETT A. BINGHAM EE-10821 5-9-18 REGISTERED PROFESSIONAL ENGINEER

Burkhart Croft ARCHITECTS LLC
880 N Street Suite 302 | Anchorage Alaska 99501
T: 907.929.9334 | www.burkhart-croft.com

HZA ENGINEERING SOLUTIONS
HZA Engineering, LLC
113 W. Northern Lights Blvd., Suite 240
Anchorage, Alaska 99503
Tel. (907) 562-1012 Fax (907) 562-1013
AK Corporation # AECL081

MATANUSKA-SUSITNA BOROUGH

MSB FIRE STATION 6-2

WASILLA, ALASKA

DATE:	5/9/2018
DRAWN:	DJL
CHECKED:	BAB
PROJECT:	2017.064.0
DRAWING TITLE:	LIGHTING PLAN - AREA A
REVISIONS:	
SHEET NO:	E2.1

1 E2.2 LIGHTING PLAN - AREA B

SCALE: 1/8" = 1'-0"

GENERAL NOTES

1. PROVIDE SEISMIC BRACING AND SUPPORT FOR ELECTRICAL LIGHTS AND EQUIPMENT WHERE REQUIRED BY THE IBC AND OTHER APPLICABLE CODES.
2. ALTHOUGH NOT SHOWN, AND UNLESS CONDUCTORS ENTER THE BOX THROUGH A RACEWAY, SWITCH BOXES SHALL INCLUDE A "GROUNDED CONDUCTOR" (NEUTRAL) OF THE CONTROLLED LIGHTING CIRCUIT AS REQUIRED BY NEC 404.2(C).
3. CONNECT EMERGENCY LIGHT BATTERIES AND EXIT SIGNAGE TO UNSWITCHED "HOT" LEG OF LOCAL AREA LIGHTING BRANCH CIRCUIT.
4. LIGHTING CONTROLS SHALL BE SELECTED, PROVIDED, CONNECTED, AND PROGRAMMED TO PROVIDE ADEQUATE CONTROL AND COVERAGE OF THE RENOVATED SPACES CONTROLLED. REFERENCE LIGHTING CONTROL SCHEDULE ON SHEET E0.2.
5. ALTHOUGH NOT SHOWN, THE CONTRACTOR SHALL PROVIDE LINE AND/OR LOW VOLTAGE CONTROL WIRING AS REQUIRED FOR LIGHT FIXTURE SWITCHING CONTROLS, DIMMING, ETC.
6. CONTRACTOR TO VERIFY LOCATIONS OF ALL SWITCHES WITH TENANT PRIOR TO ROUGH–IN.
7. COORDINATE EXACT LOCATIONS OF LIGHT FIXTURES TO AVOID CONFLICTS WITH MECHANICAL DUCTWORK, PIPING, ARCHITECTURAL AND STRUCTURAL ELEMENTS.
8. LIGHTING IN EACH HALLWAY IS TO BE CONTROLLED AS ONE ZONE BY OCCUPANCY SENSORS. DETECTION OF ANY ONE OCCUPANCY SENSOR SHALL ILLUMINATE ALL FIXTURES IN THAT PARTICULAR HALL. PROVIDE ADDITIONAL POWER PACKS AND PROVIDE CONNECTIONS AS INDICATED BY MANUFACTURER'S WIRING DIAGRAMS.
9. ALL LIGHTING BRANCH CIRCUITRY IS TO BE CIRCUITED TO PANEL HA UNLESS OTHERWISE NOTED.

SHEET NOTES

INDICATED BY: (#)

THE FOLLOWING SHEET NOTES ARE A COMPREHENSIVE LIST APPLYING TO SHEETS E2.1, E2.2, E2.3, AND E2.4. NOT ALL NOTES APPLY TO EVERY SHEET.

1. TYPE AND QUANTITY OF OCCUPANCY SENSORS FOR CONTROL OF AREA LIGHTING IS TO BE DESIGNED BY CONTRACTOR'S VENDOR, TYPICAL OF ALL.
2. COORDINATE FINAL LOCATION OF LIGHTING FIXTURES IN THIS AREA TO MAINTAIN ACCESSIBILITY AND AVOID CONFLICT WITH MECHANICAL AND STRUCTURAL SYSTEMS.
3. CLASSROOM LIGHTING TO HAVE FUNCTIONALLY TO BE CONTROLLED AS 3 SEPARATE SPACES EACH WITH 2 ZONES, OR ANY COMBINATION OF ZONES WHEN DIVIDING WALLS ARE OPEN OR CLOSED.
4. LOWER CASE LETTER INDICATES SWITCHING CONTROL CORRESPONDING TO CONTROLS LOCATED AT WALL AND CEILING, TYPICAL WHERE SHOWN.
5. PROPOSED LOCATION OF LIGHTING NETWORK CONTROLLER & ETHERNET CONNECTION.
6. EXTERIOR LIGHTING IS TO BE ROUTED THROUGH A CONTACTOR FOR PHOTOCELL CONTROL. PROVIDE CONNECTIONS TO DDC FOR ADDITIONAL CONTROL.
7. CONNECT LIGHT FIXTURES IN THIS ROOM TO PILOT LIGHT SWITCH ABOVE FOR CONTROL.
8. COORDINATE EXACT LOCATION OF LIGHT FIXTURES TO AVOID CONFLICTS WITH MECHANICAL DUCTWORK IN THIS LOCATION. LIGHTS CAN BE PENDANT OR SURFACE MOUNTED AS NEEDED.
9. COORDINATE EXACT LOCATION OF LIGHT WITH ARCHITECTURAL FEATURE. LIGHT TO BE MOUNTED AT TOP OF STRUCTURE.
10. SWITCH FOR CONNECTION TO AND CONTROL OF SUMP PUMP ROOM LIGHTING BELOW.
11. OCCUPANCY SENSOR IS TO CONTROL 277V LIGHTS AS WELL AS 120V EXHAUST FAN (FOR ADDITIONAL 15 MINUTES). SEE POWER PLANS.

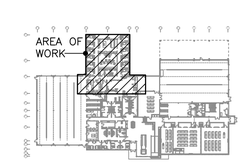

KEYPLAN

STATE OF ALASKA 49TH BRETT A. BINGHAM EE-10821 5-9-18 REGISTERED PROFESSIONAL ENGINEER

Burkhart Croft ARCHITECTS LLC
880 N Street Suite 302 | Anchorage Alaska 99501
T: 907.929.9334 | www.burkhart-croft.com

HZA ENGINEERING SOLUTIONS
HZA Engineering, LLC
113 W. Northern Lights Blvd., Suite 240
Anchorage, Alaska 99503
Tel. (907) 562-1012 Fax (907) 562-1013
AK Corporation # AECL081

MATANUSKA-SUSITNA BOROUGH

MSB FIRE STATION 6-2

WASILLA, ALASKA

DATE:	5/9/2018
DRAWN:	DJL
CHECKED:	BAB
PROJECT:	2017.064.0
DRAWING TITLE:	LIGHTING PLAN - AREA B
REVISIONS:	
SHEET NO:	**E2.2**

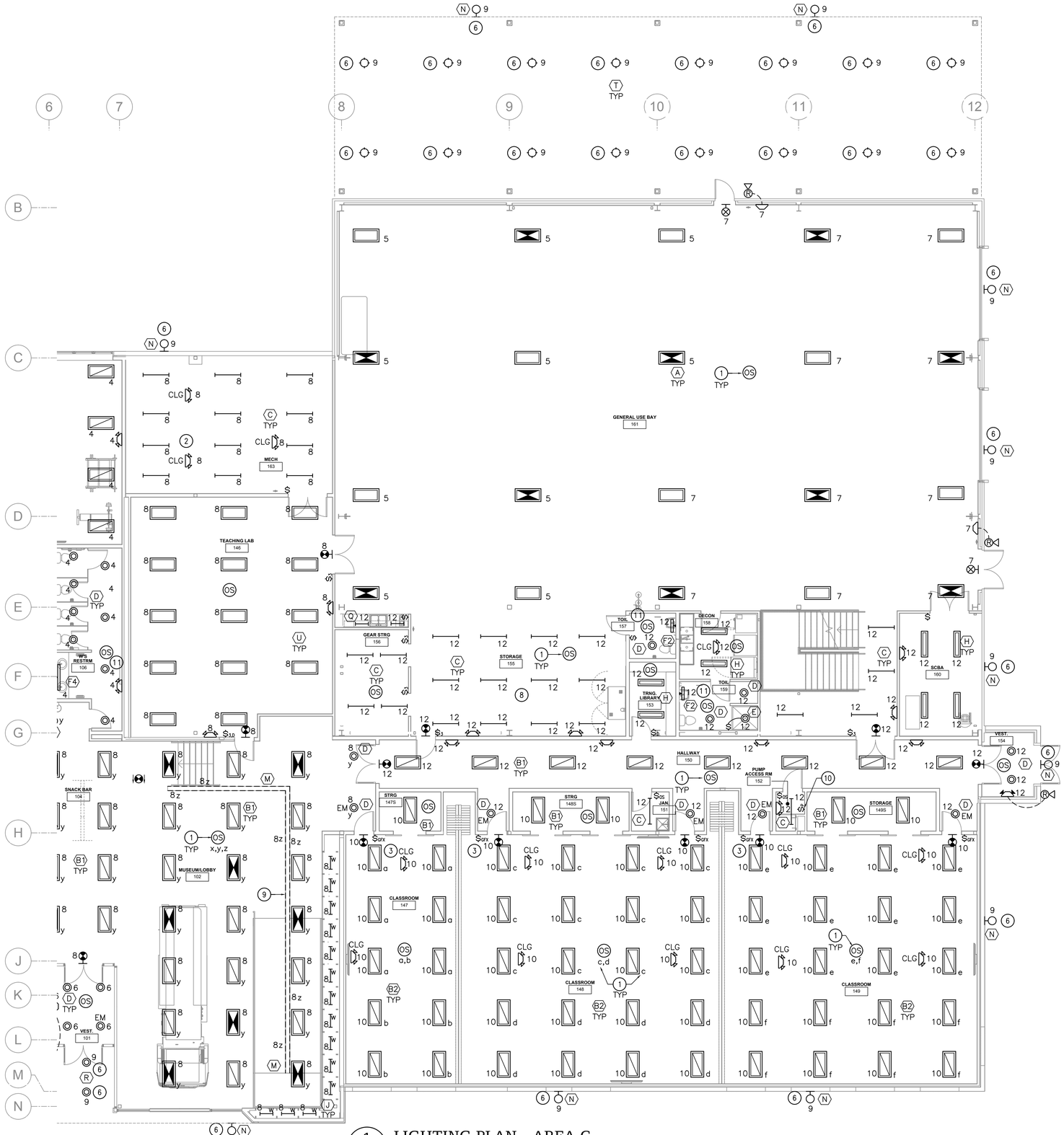

1 LIGHTING PLAN - AREA C

E2.3 SCALE: 1/8" = 1'-0"

GENERAL NOTES

1. PROVIDE SEISMIC BRACING AND SUPPORT FOR ELECTRICAL LIGHTS AND EQUIPMENT WHERE REQUIRED BY THE IBC AND OTHER APPLICABLE CODES.
2. ALTHOUGH NOT SHOWN, AND UNLESS CONDUCTORS ENTER THE BOX THROUGH A RACEWAY, SWITCH BOXES SHALL INCLUDE A "GROUNDED CONDUCTOR" (NEUTRAL) OF THE CONTROLLED LIGHTING CIRCUIT AS REQUIRED BY NEC 404.2(C).
3. CONNECT EMERGENCY LIGHT BATTERIES AND EXIT SIGNAGE TO UNSWITCHED "HOT" LEG OF LOCAL AREA LIGHTING BRANCH CIRCUIT.
4. LIGHTING CONTROLS SHALL BE SELECTED, PROVIDED, CONNECTED, AND PROGRAMMED TO PROVIDE ADEQUATE CONTROL AND COVERAGE OF THE RENOVATED SPACES CONTROLLED. REFERENCE LIGHTING CONTROL SCHEDULE ON SHEET E0.2.
5. ALTHOUGH NOT SHOWN, THE CONTRACTOR SHALL PROVIDE LINE AND/OR LOW VOLTAGE CONTROL WIRING AS REQUIRED FOR LIGHT FIXTURE SWITCHING CONTROLS, DIMMING, ETC.
6. CONTRACTOR TO VERIFY LOCATIONS OF ALL SWITCHES WITH TENANT PRIOR TO ROUGH–IN.
7. COORDINATE EXACT LOCATIONS OF LIGHT FIXTURES TO AVOID CONFLICTS WITH MECHANICAL DUCTWORK, PIPING, ARCHITECTURAL AND STRUCTURAL ELEMENTS.
8. LIGHTING IN EACH HALLWAY IS TO BE CONTROLLED AS ONE ZONE BY OCCUPANCY SENSORS. DETECTION OF ANY ONE OCCUPANCY SENSOR SHALL ILLUMINATE ALL FIXTURES IN THAT PARTICULAR HALL. PROVIDE ADDITIONAL POWER PACKS AND PROVIDE CONNECTIONS AS INDICATED BY MANUFACTURER'S WIRING DIAGRAMS.
9. ALL LIGHTING BRANCH CIRCUITRY IS TO BE CIRCUITED TO PANEL HA UNLESS OTHERWISE NOTED.

SHEET NOTES

INDICATED BY: (#)

THE FOLLOWING SHEET NOTES ARE A COMPREHENSIVE LIST APPLYING TO SHEETS E2.1, E2.2, E2.3, AND E2.4. NOT ALL NOTES APPLY TO EVERY SHEET.

1. TYPE AND QUANTITY OF OCCUPANCY SENSORS FOR CONTROL OF AREA LIGHTING IS TO BE DESIGNED BY CONTRACTOR'S VENDOR, TYPICAL OF ALL.
2. COORDINATE FINAL LOCATION OF LIGHTING FIXTURES IN THIS AREA TO MAINTAIN ACCESSIBILITY AND AVOID CONFLICT WITH MECHANICAL AND STRUCTURAL SYSTEMS.
3. CLASSROOM LIGHTING TO HAVE FUNCTIONALLY TO BE CONTROLLED AS 3 SEPARATE SPACES EACH WITH 2 ZONES, OR ANY COMBINATION OF ZONES WHEN DIVIDING WALLS ARE OPEN OR CLOSED.
4. LOWER CASE LETTER INDICATES SWITCHING CONTROL CORRESPONDING TO CONTROLS LOCATED AT WALL AND CEILING, TYPICAL WHERE SHOWN.
5. PROPOSED LOCATION OF LIGHTING NETWORK CONTROLLER & ETHERNET CONNECTION.
6. EXTERIOR LIGHTING IS TO BE ROUTED THROUGH A CONTACTOR FOR PHOTOCELL CONTROL. PROVIDE CONNECTIONS TO DDC FOR ADDITIONAL CONTROL.
7. CONNECT LIGHT FIXTURES IN THIS ROOM TO PILOT LIGHT SWITCH ABOVE FOR CONTROL.
8. COORDINATE EXACT LOCATION OF LIGHT FIXTURES TO AVOID CONFLICTS WITH MECHANICAL DUCTWORK IN THIS LOCATION. LIGHTS CAN BE PENDANT OR SURFACE MOUNTED AS NEEDED.
9. COORDINATE EXACT LOCATION OF LIGHT WITH ARCHITECTURAL FEATURE. LIGHT TO BE MOUNTED AT TOP OF STRUCTURE.
10. SWITCH FOR CONNECTION TO AND CONTROL OF SUMP PUMP ROOM LIGHTING BELOW.
11. OCCUPANCY SENSOR IS TO CONTROL 277V LIGHTS AS WELL AS 120V EXHAUST FAN (FOR ADDITIONAL 15 MINUTES). SEE POWER PLANS.

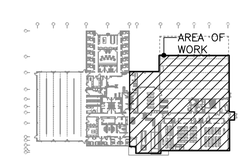

KEYPLAN

STATE OF ALASKA
49TH
BRETT A. BINGHAM
EE-10821
5-9-18
REGISTERED PROFESSIONAL ENGINEER

Burkhart Croft ARCHITECTS LLC
880 N Street Suite 302 | Anchorage Alaska 99501
T: 907.929.9334 | www.burkhart-croft.com

HZA ENGINEERING SOLUTIONS
HZA Engineering, LLC
113 W. Northern Lights Blvd., Suite 240
Anchorage, Alaska 99503
Tel. (907) 562-1012 Fax (907) 562-1013
AK Corporation # AECL681

MATANUSKA-SUSITNA BOROUGH

MSB FIRE STATION 6-2

WASILLA, ALASKA

DATE:	5/9/2018
DRAWN:	DJL
CHECKED:	BAB
PROJECT:	2017.064.0
DRAWING TITLE:	LIGHTING PLAN - AREA C
REVISIONS:	
SHEET NO:	E2.3

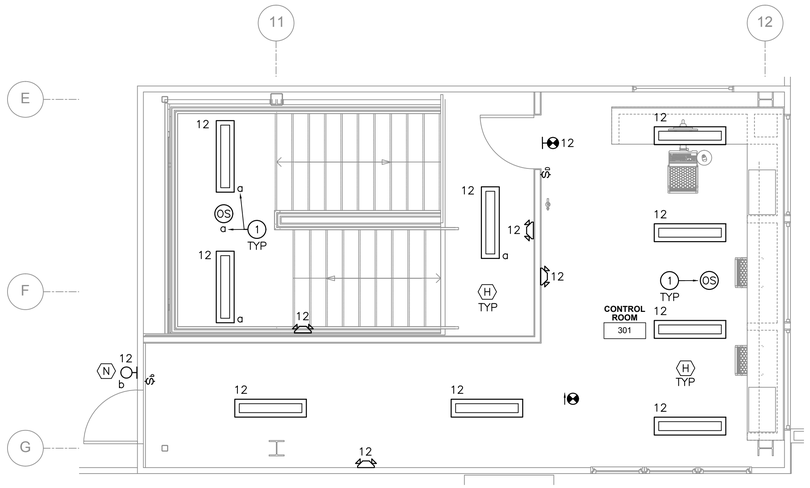

1 E2.4 LIGHTING PLAN - ROOF ACCESS

SCALE: 1/4" = 1'-0"

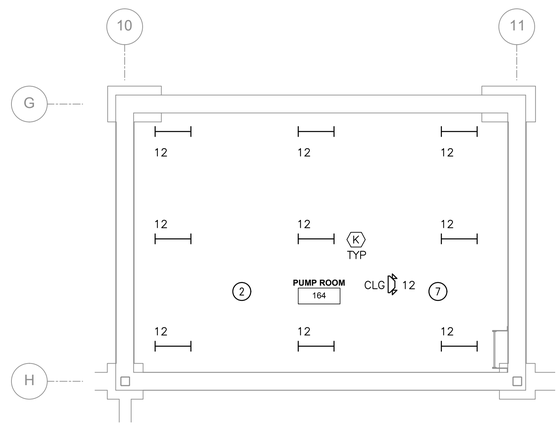

3 E2.4 LIGHTING PLAN - PUMP ROOM

SCALE: 1/4" = 1'-0"

GENERAL NOTES

1. PROVIDE SEISMIC BRACING AND SUPPORT FOR ELECTRICAL LIGHTS AND EQUIPMENT WHERE REQUIRED BY THE IBC AND OTHER APPLICABLE CODES.
2. ALTHOUGH NOT SHOWN, AND UNLESS CONDUCTORS ENTER THE BOX THROUGH A RACEWAY, SWITCH BOXES SHALL INCLUDE A "GROUNDED CONDUCTOR" (NEUTRAL) OF THE CONTROLLED LIGHTING CIRCUIT AS REQUIRED BY NEC 404.2(C).
3. CONNECT EMERGENCY LIGHT BATTERIES AND EXIT SIGNAGE TO UNSWITCHED "HOT" LEG OF LOCAL AREA LIGHTING BRANCH CIRCUIT.
4. LIGHTING CONTROLS SHALL BE SELECTED, PROVIDED, CONNECTED, AND PROGRAMMED TO PROVIDE ADEQUATE CONTROL AND COVERAGE OF THE RENOVATED SPACES CONTROLLED. REFERENCE LIGHTING CONTROL SCHEDULE ON SHEET E0.2.
5. ALTHOUGH NOT SHOWN, THE CONTRACTOR SHALL PROVIDE LINE AND/OR LOW VOLTAGE CONTROL WIRING AS REQUIRED FOR LIGHT FIXTURE SWITCHING CONTROLS, DIMMING, ETC.
6. CONTRACTOR TO VERIFY LOCATIONS OF ALL SWITCHES WITH TENANT PRIOR TO ROUGH-IN.
7. COORDINATE EXACT LOCATIONS OF LIGHT FIXTURES TO AVOID CONFLICTS WITH MECHANICAL DUCTWORK, PIPING, ARCHITECTURAL AND STRUCTURAL ELEMENTS.
8. LIGHTING IN EACH HALLWAY IS TO BE CONTROLLED AS ONE ZONE BY OCCUPANCY SENSORS. DETECTION OF ANY ONE OCCUPANCY SENSOR SHALL ILLUMINATE ALL FIXTURES IN THAT PARTICULAR HALL. PROVIDE ADDITIONAL POWER PACKS AND PROVIDE CONNECTIONS AS INDICATED BY MANUFACTURER'S WIRING DIAGRAMS.
9. ALL LIGHTING BRANCH CIRCUITRY IS TO BE CIRCUITED TO PANEL HA UNLESS OTHERWISE NOTED.

SHEET NOTES

INDICATED BY: (#)

THE FOLLOWING SHEET NOTES ARE A COMPREHENSIVE LIST APPLYING TO SHEETS E2.1, E2.2, E2.3, AND E2.4. NOT ALL NOTES APPLY TO EVERY SHEET.

1. TYPE AND QUANTITY OF OCCUPANCY SENSORS FOR CONTROL OF AREA LIGHTING IS TO BE DESIGNED BY CONTRACTOR'S VENDOR, TYPICAL OF ALL.
2. COORDINATE FINAL LOCATION OF LIGHTING FIXTURES IN THIS AREA TO MAINTAIN ACCESSIBILITY AND AVOID CONFLICT WITH MECHANICAL AND STRUCTURAL SYSTEMS.
3. CLASSROOM LIGHTING TO HAVE FUNCTIONALLY TO BE CONTROLLED AS 3 SEPARATE SPACES EACH WITH 2 ZONES, OR ANY COMBINATION OF ZONES WHEN DIVIDING WALLS ARE OPEN OR CLOSED.
4. LOWER CASE LETTER INDICATES SWITCHING CONTROL CORRESPONDING TO CONTROLS LOCATED AT WALL AND CEILING, TYPICAL WHERE SHOWN.
5. PROPOSED LOCATION OF LIGHTING NETWORK CONTROLLER & ETHERNET CONNECTION.
6. EXTERIOR LIGHTING IS TO BE ROUTED THROUGH A CONTACTOR FOR PHOTOCELL CONTROL. PROVIDE CONNECTIONS TO DDC FOR ADDITIONAL CONTROL.
7. CONNECT LIGHT FIXTURES IN THIS ROOM TO PILOT LIGHT SWITCH ABOVE FOR CONTROL.
8. COORDINATE EXACT LOCATION OF LIGHT FIXTURES TO AVOID CONFLICTS WITH MECHANICAL DUCTWORK IN THIS LOCATION. LIGHTS CAN BE PENDANT OR SURFACE MOUNTED AS NEEDED.
9. COORDINATE EXACT LOCATION OF LIGHT WITH ARCHITECTURAL FEATURE. LIGHT TO BE MOUNTED AT TOP OF STRUCTURE.
10. SWITCH FOR CONNECTION TO AND CONTROL OF SUMP PUMP ROOM LIGHTING BELOW.
11. OCCUPANCY SENSOR IS TO CONTROL 277V LIGHTS AS WELL AS 120V EXHAUST FAN (FOR ADDITIONAL 15 MINUTES). SEE POWER PLANS.

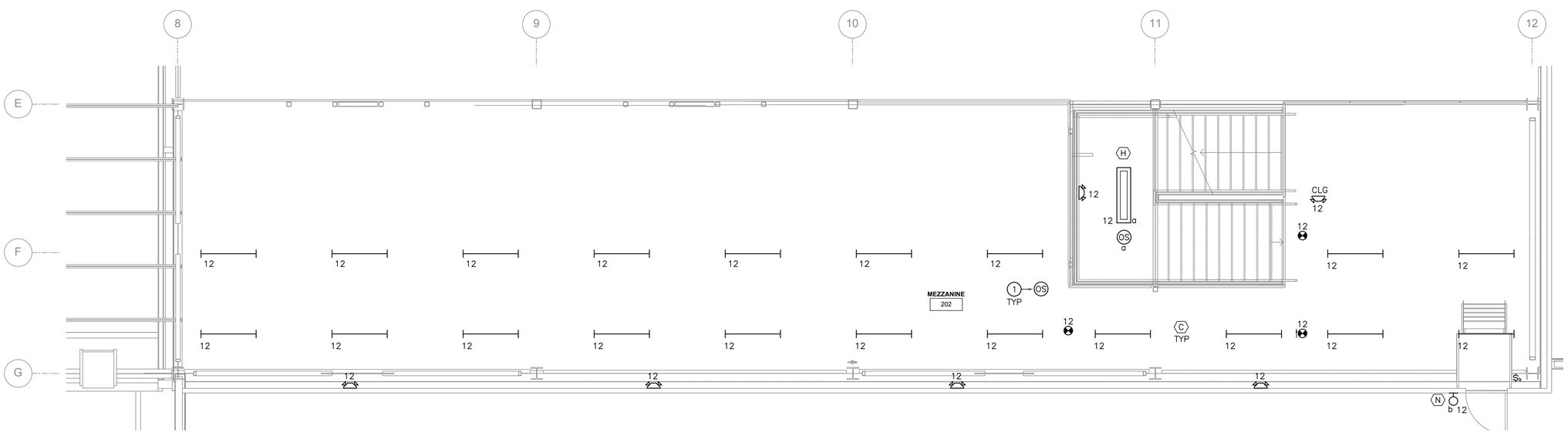

2 E2.4 LIGHTING PLAN - MEZZANINE

SCALE: 1/4" = 1'-0"

STATE OF ALASKA
49TH
BRETT A. BINGHAM
EE-10821
5-9-18
REGISTERED PROFESSIONAL ENGINEER

Burkhart Croft ARCHITECTS LLC
880 N Street Suite 302 | Anchorage Alaska 99501
T: 907.929.9334 | www.burkhart-croft.com

HZA ENGINEERING SOLUTIONS
HZA Engineering, LLC
113 W. Northern Lights Blvd., Suite 240
Anchorage, Alaska 99503
Tel. (907) 562-1012 Fax (907) 562-1013
AK Corporation # AECL681

MATANUSKA-SUSITNA BOROUGH

MSB FIRE STATION 6-2

WASILLA, ALASKA

DATE:	5/9/2018
DRAWN:	DJL
CHECKED:	BAB
PROJECT:	2017.064.0
DRAWING TITLE:	MEZZANINE, PUMP ROOM, AND STAIR LANDING LIGHTING PLANS
REVISIONS:	
SHEET NO:	E2.4

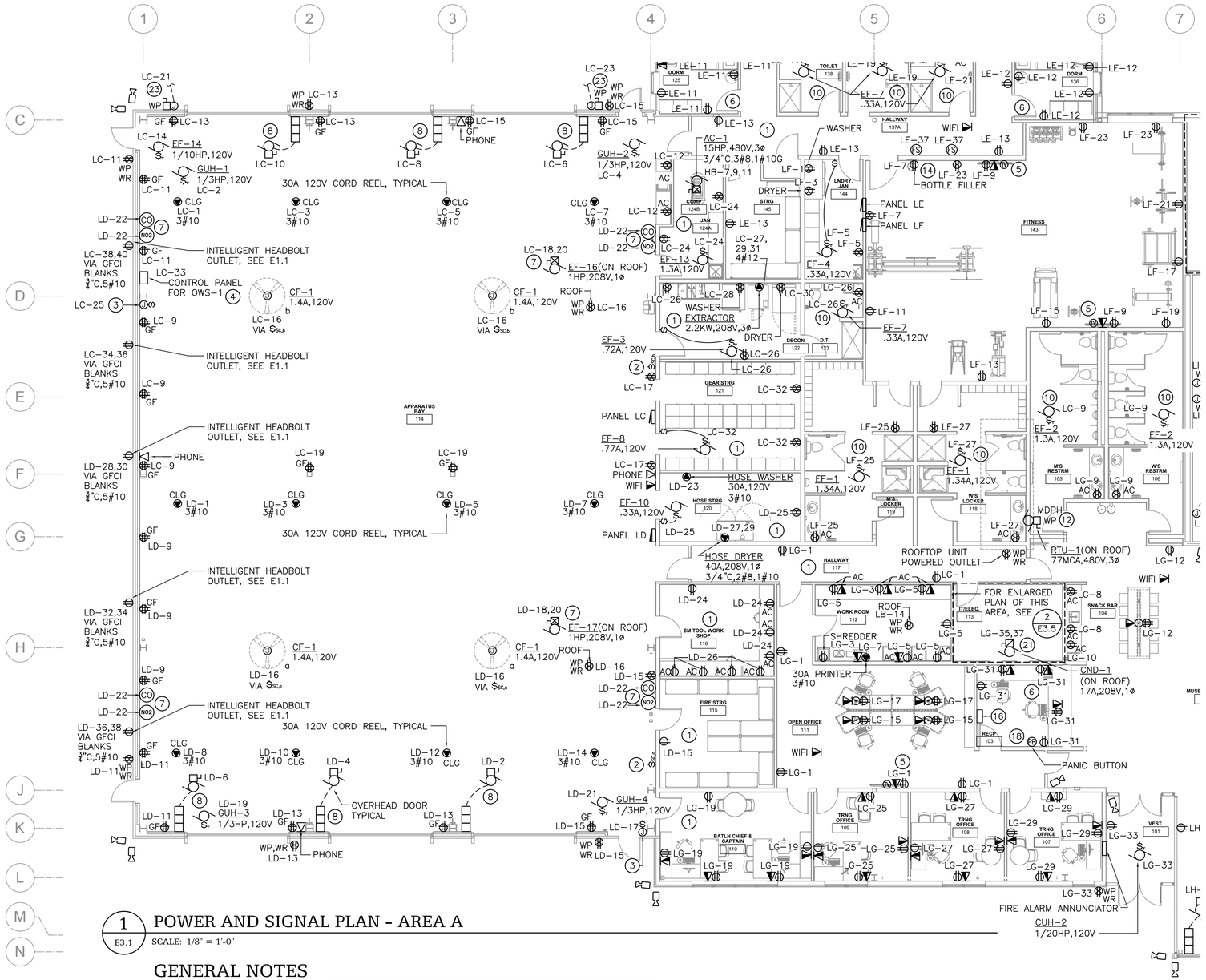

1 E3.1 POWER AND SIGNAL PLAN - AREA A

SCALE: 1/8" = 1'-0"

GENERAL NOTES

1. ALL RECEPTACLES LOCATED IN THE MAINTENANCE AND GENERAL USE BAYS ARE TO BE LOCATED +48" ABOVE THE FLOOR.
2. REFERENCE G1.3 FOR EXTENT OF R-2 DORMITORY. ELECTRICAL SYSTEMS WITHIN THIS AREA SHALL BE PROTECTED BY ARC-FAULT CIRCUIT BREAKERS AS REQUIRED BY THE NEC 210.12.
3. PROVIDE SOFT START MOTOR STARTERS FOR MOTORS OVER 5HP.
4. THE CONTRACTOR SHALL SIZE CONDUCTORS TO PROVIDE MAXIMUM VOLTAGE DROP NOT TO EXCEED 3% IN BRANCH CIRCUITS OR FEEDERS.
5. GFCI RECEPTACLES SHALL BE LOCATED IN A READILY ACCESSIBLE LOCATION PER NEC 210.8. IF NOT POSSIBLE, PROVIDE CIRCUITS SUPPLIED BY A 5mA GFCI CIRCUIT BREAKER.
6. COORDINATE WITH GENERAL CONTRACTOR TO ENSURE NEC REQUIRED WORKING CLEARANCES AND SPACES ARE MAINTAINED AROUND ELECTRICAL EQUIPMENT SUCH AS DISTRIBUTION EQUIPMENT, PANELS, DISCONNECTS, MOTOR STARTERS, ETC. PER NEC 110.26. WHERE NECESSARY, PROVIDE STRUCTURAL CHANNEL (UNISTRUT) SUPPORT FOR INSTALLATION.
7. COORDINATE EXACT LOCATIONS AND REQUIREMENTS OF MECHANICAL ITEMS PRIOR TO ROUGH-IN. PROVIDE ALL REQUIRED APPURTENANCES AND POWER AND CONTROL CONNECTIONS AS NEEDED FOR EQUIPMENT TO OPERATE AS COMPLETE AND FULLY OPERATIONAL SYSTEMS AS INTENDED AND INDICATED IN THE DRAWINGS, SPECIFICATIONS, AND IN THE MECHANICAL SEQUENCE OF OPERATIONS. ALL REQUIRED LINE AND LOW VOLTAGE CONNECTIONS INCLUDING INTERCONNECTING CONTROL WIRING, MAY NOT BE SHOWN IN THESE DRAWINGS, BUT MAY BE REQUIRED, AND IF SO ARE TO BE PROVIDED. REFERENCE MECHANICAL DOCUMENTS FOR LOCATIONS AND REQUIREMENTS.

SHEET NOTES

INDICATED BY: (#)

THE FOLLOWING SHEET NOTES ARE A COMPREHENSIVE LIST APPLYING TO SHEETS E3.1, E3.2, E3.3, E3.4, AND E3.5. NOT ALL NOTES APPLY TO EACH SHEET.

1. UNLESS OTHERWISE NOTED, ALL RECEPTACLES IN THIS ROOM TO BE MOUNTED AT A MINIMUM OF +24" ABOVE THE FLOOR.
2. CEILING FAN SPEED CONTROL, CONNECT TO FANS ABOVE. COORDINATE WITH MANUFACTURER FOR WIRING REQUIREMENTS.
3. JUNCTION BOX AND DISCONNECT SWITCH FOR CONNECTION TO OVERFLOW SCUPPER HEATTRACE. PROVIDE HEATTRACE AND ALL REQUIRED APPURTENANCES TO HEATTRACE DOWNSPOUT AS REQUIRED BY THE MECHANICAL DRAWINGS. COORDINATE EXACT LOCATION. PROVIDE & CONNECT TO PILOT LIGHT SWITCH CONTROLS ADJACENT TO THE SERVING PANELBOARD OR AS OTHERWISE INDICATED BY OWNER.
4. PROVIDE CONDUIT, CONTROL WIRING, AND CONNECTIONS BETWEEN OIL/WATER SEPARATOR CONTROL PANEL AND TANK. INSTALL PER THE MANUFACTURER'S INSTALLATION INSTRUCTIONS.
5. COORDINATE HEIGHTS AND LOCATION FOR ALL DEVICES ASSOCIATED WITH TV SCREEN PRIOR TO ROUGH IN.
6. COORDINATE HEIGHTS AND LOCATION FOR ALL DEVICES IN THIS ROOM WITH ARCHITECTURAL.
7. PROVIDE EQUIPMENT, CONNECTIONS, AND CONTROLS BETWEEN CARBON MONOXIDE DETECTORS, NITROGEN DIOXIDE DETECTORS, DDC, AND EXHAUST FANS AS REQUIRED FOR INTENDED OPERATION AND AS INDICATED BY THE MECHANICAL SEQUENCE OF OPERATIONS.
8. PROVIDE CONNECTIONS AS REQUIRED BETWEEN OVERHEAD DOOR OPERATOR, UP/DOWN/STOP CONTROLS, SAFETY INTERLOCKS, ETC.
9. OUTLET AND SPEAKERS FOR CLASSROOM SOUND FIELD SYSTEM, LIGHTSPEED TECHNOLOGIES PHONIC EAR OR EQUAL. CONTRACTOR TO PROVIDE DESIGN AND INSTALLATION OF SYSTEM AS APPROPRIATE. COORDINATE EXACT LOCATIONS AND REQUIREMENTS WITH OWNER AND AS APPROPRIATE FOR SYSTEM COMPONENTS PRIOR TO ROUGH-IN.
10. EXHAUST FAN (120V) TO BE CONTROLLED BY SAME OCCUPANCY SENSOR CONTROLLING LIGHTING (277V) IN THIS ROOM. FAN IS TO RUN FOR AN ADDITIONAL 15 MINUTES AFTER LIGHTING TURNS OFF.
11. FIRE PUMP AND ASSOCIATED EQUIPMENT. COORDINATE FINAL PUMP SIZE AND ANY ADDITIONAL REQUIREMENTS (JOCKEY PUMP, ETC.) WITH FIRE PROTECTION SYSTEM DESIGN AND EQUIPMENT SUPPLIED. PROVIDE ALL WORK IN COMPLIANCE WITH THE REQUIREMENTS OF NEC ARTICLE 695 AND NFPA 20.
12. SEE SINGLE LINE DIAGRAM, 1/E5.1 FOR CONDUCTOR AND CONDUIT SIZES.
13. PROVIDE CONDUIT AND SIGNAL CABLING (VGA, HDMI, ETC) AS NECESSARY FOR CONNECTION FROM PODIUM TO TV SCREEN AND TV SCREEN TO AV CLOSET.
14. RECEPTACLE FOR CONNECTION TO WATER BOTTLE FILLER. COORDINATE EXACT LOCATION AND HEIGHT. RECEPTACLE IS TO BE GFCI PROTECTED. CONNECT TO THE LOAD SIDE OF A 5mA GFCI RECEPTACLE ON THE SAME CIRCUIT.
15. RANGE HOOD (RH-1) 5A, 120V. CIRCUIT TO LE-28. PROVIDE CONNECTIONS TO GAS SOLENOID VALVES FOR SHUTTING OFF RANGE. REFERENCE MECHANICAL SCHEDULE.
16. GENERATOR REMOTE ANNUNCIATOR PANEL. PROVIDE POWER AND CONTROL CONNECTIONS AS REQUIRED FOR PROPER OPERATION. COORDINATE LOCATION.
17. RECEPTACLE FOR BUILT-IN MICROWAVE, COORDINATE EXACT HEIGHT AND LOCATION, CIRCUIT TO LE-32.
18. PANIC BUTTON IS TO LOCK EXTERIOR AND INTERIOR DOORS WITH ELECTRIC LOCKS AND NOTIFY MONITORING AGENCY. PROVIDE CONNECTIONS AS REQUIRED.
19. POWER FOR RACK MOUNTED CAMERA SURVEILLANCE EQUIPMENT.
20. RADIO ANTENNA ARRAY AND MICROWAVE DISH ANTENNA ON ROOF WITH CONDUIT (2", VERIFY) AND PULLSTRING TO TELECOMM ROOM. COORDINATE EXACT LOCATIONS AND REQUIREMENTS INCLUDING ANY NECESSARY GROUNDING WITH OWNER PRIOR TO INSTALLATION,
21. PROVIDE POWER AND CONTROL CONNECTIONS BETWEEN CONDENSING UNIT ON ROOF AND INDOOR COOLING UNIT IN "IT" ROOM.
22. PROVIDE CABLE TRAY IN "IT" ROOM AS APPROPRIATE.
23. JUNCTION BOX AND DISCONNECT SWITCH FOR CONNECTION TO UNDERGROUND RAINLEADER/STORM DRAIN PIPING HEATTRACE. PROVIDE HEATTRACE AND ALL REQUIRED APPURTENANCES TO HEATTRACE PIPING FROM BUILDING TO DRYWELL OR RETENTION POND AS REQUIRED BY THE CIVIL DRAWINGS. COORDINATE EXACT LOCATIONS, LENGTHS, ROUTING, AND REQUIREMENTS. PROVIDE & CONNECT TO PILOT LIGHT SWITCH CONTROLS ADJACENT TO THE SERVING PANELBOARD.
24. COORDINATE WITH MECHANICAL FOR THE PROVIDING AND INSTALLING OF BOILER EMERGENCY SHUTDOWN CONTROLS. PROVIDE ALL CONNECTIONS AND APPURTENANCES AS REQUIRED BY ASME CSD-1 AND MECHANICAL SHEETS.
25. WATER FILL CONTROL PANEL. COORDINATE AND PROVIDE POWER AND CONTROL CONNECTIONS AS REQUIRED.

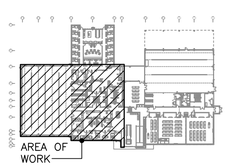

KEYPLAN

STATE OF ALASKA 49TH BRETT A. BINGHAM EE-10821 5-9-18 REGISTERED PROFESSIONAL ENGINEER

Burkhart Croft ARCHITECTS LLC
880 N Street Suite 302 | Anchorage Alaska 99501
T: 907.929.9334 | www.burkhart-croft.com

HZA ENGINEERING SOLUTIONS
HZA Engineering, LLC
113 W. Northern Lights Blvd., Suite 240
Anchorage, Alaska 99503
Tel. (907) 562-1012 Fax (907) 562-1013
AK Corporation # AECL681

MATANUSKA-SUSITNA BOROUGH

MSB FIRE STATION 6-2

WASILLA, ALASKA

DATE:	5/9/2018
DRAWN:	DJL
CHECKED:	BAB
PROJECT:	2017.064.0
DRAWING TITLE:	POWER PLAN - AREA A
REVISIONS:	
SHEET NO:	**E3.1**

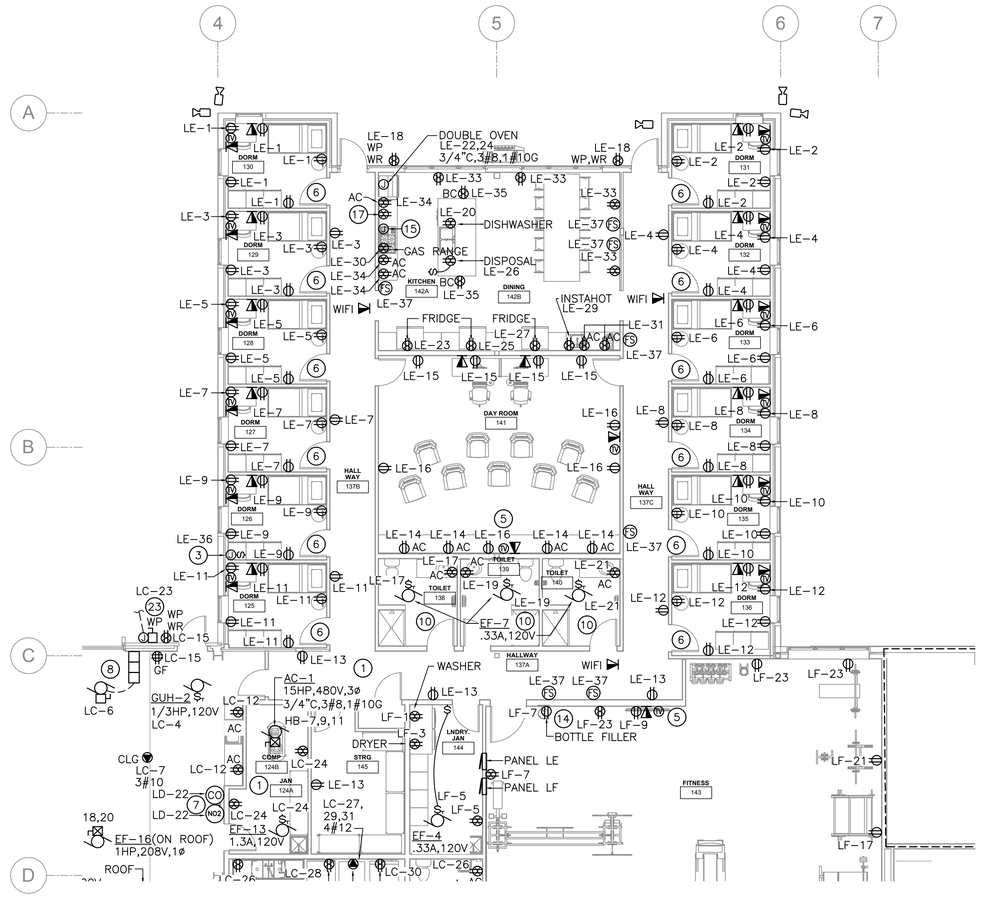

1 E3.2

POWER AND SIGNAL PLAN - AREA B

SCALE: 1/8" = 1'-0"

GENERAL NOTES

1. ALL RECEPTACLES LOCATED IN THE MAINTENANCE AND GENERAL USE BAYS ARE TO BE LOCATED +48" ABOVE THE FLOOR.
2. REFERENCE G1.3 FOR EXTENT OF R-2 DORMITORY. ELECTRICAL SYSTEMS WITHIN THIS AREA SHALL BE PROTECTED BY ARC-FAULT CIRCUIT BREAKERS AS REQUIRED BY THE NEC 210.12.
3. PROVIDE SOFT START MOTOR STARTERS FOR MOTORS OVER 5HP.
4. THE CONTRACTOR SHALL SIZE CONDUCTORS TO PROVIDE MAXIMUM VOLTAGE DROP NOT TO EXCEED 3% IN BRANCH CIRCUITS OR FEEDERS.
5. GFCI RECEPTACLES SHALL BE LOCATED IN A READILY ACCESSIBLE LOCATION PER NEC 210.8. IF NOT POSSIBLE, PROVIDE CIRCUITS SUPPLIED BY A 5mA GFCI CIRCUIT BREAKER.
6. COORDINATE WITH GENERAL CONTRACTOR TO ENSURE NEC REQUIRED WORKING CLEARANCES AND SPACES ARE MAINTAINED AROUND ELECTRICAL EQUIPMENT SUCH AS DISTRIBUTION EQUIPMENT, PANELS, DISCONNECTS, MOTOR STARTERS, ETC. PER NEC 110.26. WHERE NECESSARY, PROVIDE STRUCTURAL CHANNEL (UNISTRUT) SUPPORT FOR INSTALLATION.
7. COORDINATE EXACT LOCATIONS AND REQUIREMENTS OF MECHANICAL ITEMS PRIOR TO ROUGH-IN. PROVIDE ALL REQUIRED APPURTENANCES AND POWER AND CONTROL CONNECTIONS AS NEEDED FOR EQUIPMENT TO OPERATE AS COMPLETE AND FULLY OPERATIONAL SYSTEMS AS INTENDED AND INDICATED IN THE DRAWINGS, SPECIFICATIONS, AND IN THE MECHANICAL SEQUENCE OF OPERATIONS. ALL REQUIRED LINE AND LOW VOLTAGE CONNECTIONS INCLUDING INTERCONNECTING CONTROL WIRING, MAY NOT BE SHOWN IN THESE DRAWINGS, BUT MAY BE REQUIRED, AND IF SO ARE TO BE PROVIDED. REFERENCE MECHANICAL DOCUMENTS FOR LOCATIONS AND REQUIREMENTS.

SHEET NOTES

INDICATED BY: #

THE FOLLOWING SHEET NOTES ARE A COMPREHENSIVE LIST APPLYING TO SHEETS E3.1, E3.2, E3.3, E3.4, AND E3.5. NOT ALL NOTES APPLY TO EACH SHEET.

1. UNLESS OTHERWISE NOTED, ALL RECEPTACLES IN THIS ROOM TO BE MOUNTED AT A MINIMUM OF +24" ABOVE THE FLOOR.
2. CEILING FAN SPEED CONTROL, CONNECT TO FANS ABOVE. COORDINATE WITH MANUFACTURER FOR WIRING REQUIREMENTS.
3. JUNCTION BOX AND DISCONNECT SWITCH FOR CONNECTION TO OVERFLOW SCUPPER HEATTRACE. PROVIDE HEATTRACE AND ALL REQUIRED APPURTENANCES TO HEATTRACE DOWNSPOUT AS REQUIRED BY THE MECHANICAL DRAWINGS. COORDINATE EXACT LOCATION. PROVIDE & CONNECT TO PILOT LIGHT SWITCH CONTROLS ADJACENT TO THE SERVING PANELBOARD OR AS OTHERWISE INDICATED BY OWNER.
4. PROVIDE CONDUIT, CONTROL WIRING, AND CONNECTIONS BETWEEN OIL/WATER SEPARATOR CONTROL PANEL AND TANK. INSTALL PER THE MANUFACTURER'S INSTALLATION INSTRUCTIONS.
5. COORDINATE HEIGHTS AND LOCATION FOR ALL DEVICES ASSOCIATED WITH TV SCREEN PRIOR TO ROUGH IN.
6. COORDINATE HEIGHTS AND LOCATION FOR ALL DEVICES IN THIS ROOM WITH ARCHITECTURAL.
7. PROVIDE EQUIPMENT, CONNECTIONS, AND CONTROLS BETWEEN CARBON MONOXIDE DETECTORS, NITROGEN DIOXIDE DETECTORS, DDC, AND EXHAUST FANS AS REQUIRED FOR INTENDED OPERATION AND AS INDICATED BY THE MECHANICAL SEQUENCE OF OPERATIONS.
8. PROVIDE CONNECTIONS AS REQUIRED BETWEEN OVERHEAD DOOR OPERATOR, UP/DOWN/STOP CONTROLS, SAFETY INTERLOCKS, ETC.
9. OUTLET AND SPEAKERS FOR CLASSROOM SOUND FIELD SYSTEM, LIGHTSPEED TECHNOLOGIES PHONIC EAR OR EQUAL. CONTRACTOR TO PROVIDE DESIGN AND INSTALLATION OF SYSTEM AS APPROPRIATE. COORDINATE EXACT LOCATIONS AND REQUIREMENTS WITH OWNER AND AS APPROPRIATE FOR SYSTEM COMPONENTS PRIOR TO ROUGH-IN.
10. EXHAUST FAN (120V) TO BE CONTROLLED BY SAME OCCUPANCY SENSOR CONTROLLING LIGHTING (277V) IN THIS ROOM. FAN IS TO RUN FOR AN ADDITIONAL 15 MINUTES AFTER LIGHTING TURNS OFF.
11. FIRE PUMP AND ASSOCIATED EQUIPMENT. COORDINATE FINAL PUMP SIZE AND ANY ADDITIONAL REQUIREMENTS (JOCKEY PUMP, ETC.) WITH FIRE PROTECTION SYSTEM DESIGN AND EQUIPMENT SUPPLIED. PROVIDE ALL WORK IN COMPLIANCE WITH THE REQUIREMENTS OF NEC ARTICLE 695 AND NFPA 20.
12. SEE SINGLE LINE DIAGRAM, 1/E5.1 FOR CONDUCTOR AND CONDUIT SIZES.
13. PROVIDE CONDUIT AND SIGNAL CABLING (VGA, HDMI, ETC) AS NECESSARY FOR CONNECTION FROM PODIUM TO TV SCREEN AND TV SCREEN TO AV CLOSET.
14. RECEPTACLE FOR CONNECTION TO WATER BOTTLE FILLER. COORDINATE EXACT LOCATION AND HEIGHT. RECEPTACLE IS TO BE GFCI PROTECTED. CONNECT TO THE LOAD SIDE OF A 5mA GFCI RECEPTACLE ON THE SAME CIRCUIT.
15. RANGE HOOD (RH-1) 5A, 120V. CIRCUIT TO LE-28. PROVIDE CONNECTIONS TO GAS SOLENOID VALVES FOR SHUTTING OFF RANGE. REFERENCE MECHANICAL SCHEDULE.
16. GENERATOR REMOTE ANNUNCIATOR PANEL. PROVIDE POWER AND CONTROL CONNECTIONS AS REQUIRED FOR PROPER OPERATION. COORDINATE LOCATION.
17. RECEPTACLE FOR BUILT-IN MICROWAVE, COORDINATE EXACT HEIGHT AND LOCATION, CIRCUIT TO LE-32.
18. PANIC BUTTON IS TO LOCK EXTERIOR AND INTERIOR DOORS WITH ELECTRIC LOCKS AND NOTIFY MONITORING AGENCY. PROVIDE CONNECTIONS AS REQUIRED.
19. POWER FOR RACK MOUNTED CAMERA SURVEILLANCE EQUIPMENT.
20. RADIO ANTENNA ARRAY AND MICROWAVE DISH ANTENNA ON ROOF WITH CONDUIT (2", VERIFY) AND PULLSTRING TO TELECOMM ROOM. COORDINATE EXACT LOCATIONS AND REQUIREMENTS INCLUDING ANY NECESSARY GROUNDING WITH OWNER PRIOR TO INSTALLATION,
21. PROVIDE POWER AND CONTROL CONNECTIONS BETWEEN CONDENSING UNIT ON ROOF AND INDOOR COOLING UNIT IN "IT" ROOM.
22. PROVIDE CABLE TRAY IN "IT" ROOM AS APPROPRIATE.
23. JUNCTION BOX AND DISCONNECT SWITCH FOR CONNECTION TO UNDERGROUND RAINLEADER/STORM DRAIN PIPING HEATTRACE. PROVIDE HEATTRACE AND ALL REQUIRED APPURTENANCES TO HEATTRACE PIPING FROM BUILDING TO DRYWELL OR RETENTION POND AS REQUIRED BY THE CIVIL DRAWINGS. COORDINATE EXACT LOCATIONS, LENGTHS, ROUTING, AND REQUIREMENTS. PROVIDE & CONNECT TO PILOT LIGHT SWITCH CONTROLS ADJACENT TO THE SERVING PANELBOARD.
24. COORDINATE WITH MECHANICAL FOR THE PROVIDING AND INSTALLING OF BOILER EMERGENCY SHUTDOWN CONTROLS. PROVIDE ALL CONNECTIONS AND APPURTENANCES AS REQUIRED BY ASME CSD-1 AND MECHANICAL SHEETS.
25. WATER FILL CONTROL PANEL. COORDINATE AND PROVIDE POWER AND CONTROL CONNECTIONS AS REQUIRED.

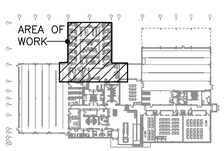

KEYPLAN

STATE OF ALASKA
49TH
BRETT A. BINGHAM
EE-10821
5-9-18
REGISTERED PROFESSIONAL ENGINEER

Burkhart Croft
ARCHITECTS LLC
880 N Street Suite 302 | Anchorage Alaska 99501
T: 907.929.9334 | www.burkhart-croft.com

HZA
ENGINEERING SOLUTIONS
HZA Engineering, LLC
113 W. Northern Lights Blvd., Suite 240
Anchorage, Alaska 99503
Tel. (907) 562-1012 Fax (907) 562-1013
AK Corporation # AECL081

MATANUSKA-SUSITNA BOROUGH

MSB FIRE STATION 6-2

WASILLA, ALASKA

DATE:	5/9/2018
DRAWN:	DJL
CHECKED:	BAB
PROJECT:	2017.064.0
DRAWING TITLE:	POWER PLAN - AREA B
REVISIONS:	
SHEET NO:	E3.2

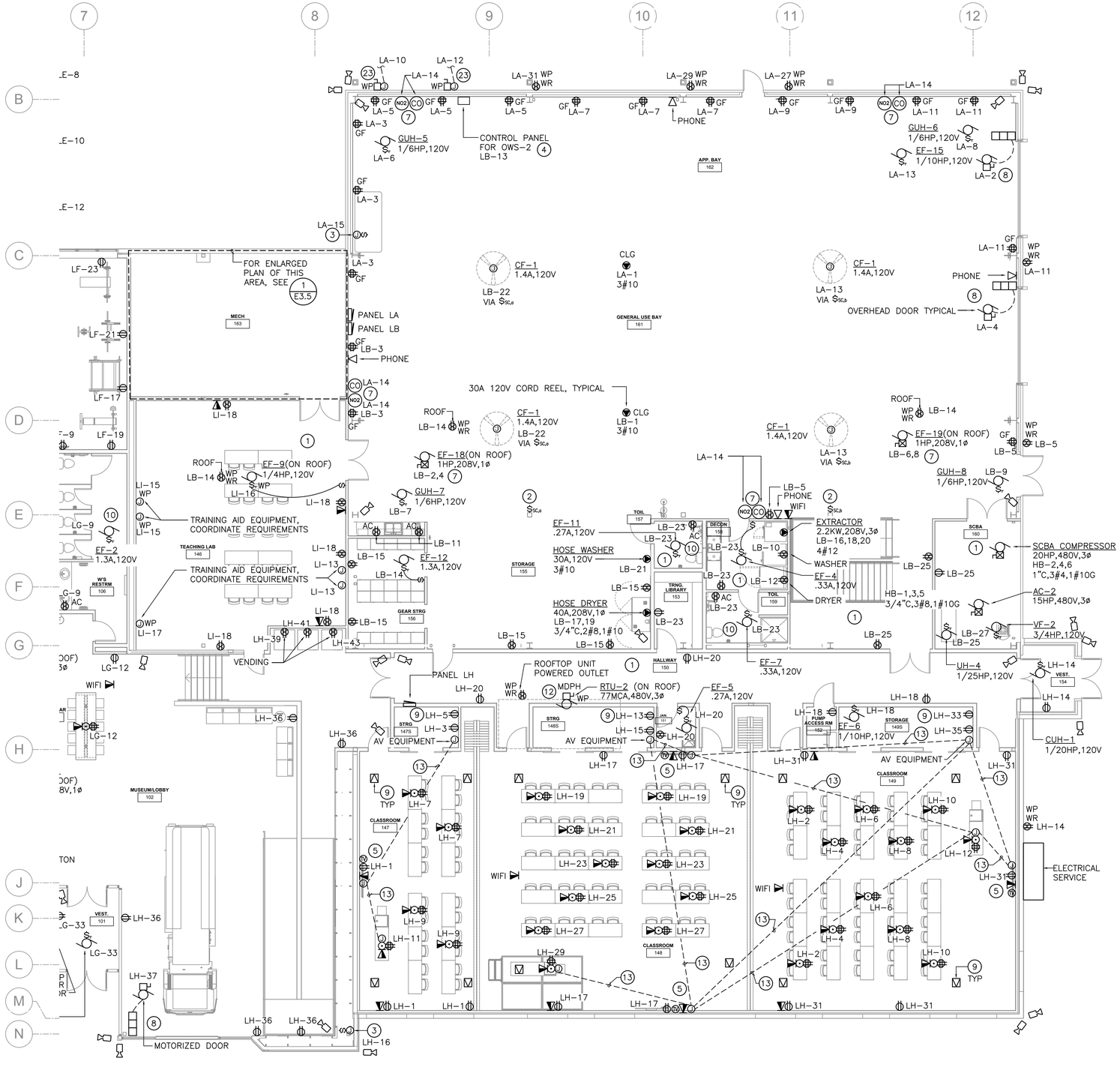

1 E3.3 POWER AND SIGNAL PLAN - AREA C

SCALE: 1/8" = 1'-0"

SHEET NOTES

INDICATED BY: #

THE FOLLOWING SHEET NOTES ARE A COMPREHENSIVE LIST APPLYING TO SHEETS E3.1, E3.2, E3.3, E3.4, AND E3.5. NOT ALL NOTES APPLY TO EACH SHEET.

1. UNLESS OTHERWISE NOTED, ALL RECEPTACLES IN THIS ROOM TO BE MOUNTED AT A MINIMUM OF +24" ABOVE THE FLOOR.
2. CEILING FAN SPEED CONTROL, CONNECT TO FANS ABOVE. COORDINATE WITH MANUFACTURER FOR WIRING REQUIREMENTS.
3. JUNCTION BOX AND DISCONNECT SWITCH FOR CONNECTION TO OVERFLOW SCUPPER HEATTRACE. PROVIDE HEATTRACE AND ALL REQUIRED APPURTENANCES TO HEATTRACE DOWNSPOUT AS REQUIRED BY THE MECHANICAL DRAWINGS. COORDINATE EXACT LOCATION. PROVIDE & CONNECT TO PILOT LIGHT SWITCH CONTROLS ADJACENT TO THE SERVING PANELBOARD OR AS OTHERWISE INDICATED BY OWNER.
4. PROVIDE CONDUIT, CONTROL WIRING, AND CONNECTIONS BETWEEN OIL/WATER SEPARATOR CONTROL PANEL AND TANK. INSTALL PER THE MANUFACTURER'S INSTALLATION INSTRUCTIONS.
5. COORDINATE HEIGHTS AND LOCATION FOR ALL DEVICES ASSOCIATED WITH TV SCREEN PRIOR TO ROUGH IN.
6. COORDINATE HEIGHTS AND LOCATION FOR ALL DEVICES IN THIS ROOM WITH ARCHITECTURAL.
7. PROVIDE EQUIPMENT, CONNECTIONS, AND CONTROLS BETWEEN CARBON MONOXIDE DETECTORS, NITROGEN DIOXIDE DETECTORS, DDC, AND EXHAUST FANS AS REQUIRED FOR INTENDED OPERATION AND AS INDICATED BY THE MECHANICAL SEQUENCE OF OPERATIONS.
8. PROVIDE CONNECTIONS AS REQUIRED BETWEEN OVERHEAD DOOR OPERATOR, UP/DOWN/STOP CONTROLS, SAFETY INTERLOCKS, ETC.
9. OUTLET AND SPEAKERS FOR CLASSROOM SOUND FIELD SYSTEM, LIGHTSPEED TECHNOLOGIES PHONIC EAR OR EQUAL. CONTRACTOR TO PROVIDE DESIGN AND INSTALLATION OF SYSTEM AS APPROPRIATE. COORDINATE EXACT LOCATIONS AND REQUIREMENTS WITH OWNER AND AS APPROPRIATE FOR SYSTEM COMPONENTS PRIOR TO ROUGH-IN.
10. EXHAUST FAN (120V) TO BE CONTROLLED BY SAME OCCUPANCY SENSOR CONTROLLING LIGHTING (277V) IN THIS ROOM. FAN IS TO RUN FOR AN ADDITIONAL 15 MINUTES AFTER LIGHTING TURNS OFF.
11. FIRE PUMP AND ASSOCIATED EQUIPMENT. COORDINATE FINAL PUMP SIZE AND ANY ADDITIONAL REQUIREMENTS (JOCKEY PUMP, ETC.) WITH FIRE PROTECTION SYSTEM DESIGN AND EQUIPMENT SUPPLIED. PROVIDE ALL WORK IN COMPLIANCE WITH THE REQUIREMENTS OF NEC ARTICLE 695 AND NFPA 20.
12. SEE SINGLE LINE DIAGRAM, 1/E5.1 FOR CONDUCTOR AND CONDUIT SIZES.
13. PROVIDE CONDUIT AND SIGNAL CABLING (VGA, HDMI, ETC) AS NECESSARY FOR CONNECTION FROM PODIUM TO TV SCREEN AND TV SCREEN TO AV CLOSET.
14. RECEPTACLE FOR CONNECTION TO WATER BOTTLE FILLER. COORDINATE EXACT LOCATION AND HEIGHT. RECEPTACLE IS TO BE GFCI PROTECTED. CONNECT TO THE LOAD SIDE OF A 5mA GFCI RECEPTACLE ON THE SAME CIRCUIT.
15. RANGE HOOD (RH-1) 5A, 120V. CIRCUIT TO LE-28. PROVIDE CONNECTIONS TO GAS SOLENOID VALVES FOR SHUTTING OFF RANGE. REFERENCE MECHANICAL SCHEDULE.
16. GENERATOR REMOTE ANNUNCIATOR PANEL. PROVIDE POWER AND CONTROL CONNECTIONS AS REQUIRED FOR PROPER OPERATION. COORDINATE LOCATION.
17. RECEPTACLE FOR BUILT-IN MICROWAVE, COORDINATE EXACT HEIGHT AND LOCATION, CIRCUIT TO LE-32.
18. PANIC BUTTON IS TO LOCK EXTERIOR AND INTERIOR DOORS WITH ELECTRIC LOCKS AND NOTIFY MONITORING AGENCY. PROVIDE CONNECTIONS AS REQUIRED.
19. POWER FOR RACK MOUNTED CAMERA SURVEILLANCE EQUIPMENT.
20. RADIO ANTENNA ARRAY AND MICROWAVE DISH ANTENNA ON ROOF WITH CONDUIT (2", VERIFY) AND PULLSTRING TO TELECOMM ROOM. COORDINATE EXACT LOCATIONS AND REQUIREMENTS INCLUDING ANY NECESSARY GROUNDING WITH OWNER PRIOR TO INSTALLATION,
21. PROVIDE POWER AND CONTROL CONNECTIONS BETWEEN CONDENSING UNIT ON ROOF AND INDOOR COOLING UNIT IN "IT" ROOM.
22. PROVIDE CABLE TRAY IN "IT" ROOM AS APPROPRIATE.
23. JUNCTION BOX AND DISCONNECT SWITCH FOR CONNECTION TO UNDERGROUND RAINLEADER/STORM DRAIN PIPING HEATTRACE. PROVIDE HEATTRACE AND ALL REQUIRED APPURTENANCES TO HEATTRACE PIPING FROM BUILDING TO DRYWELL OR RETENTION POND AS REQUIRED BY THE CIVIL DRAWINGS. COORDINATE EXACT LOCATIONS, LENGTHS, ROUTING, AND REQUIREMENTS. PROVIDE & CONNECT TO PILOT LIGHT SWITCH CONTROLS ADJACENT TO THE SERVING PANELBOARD.
24. COORDINATE WITH MECHANICAL FOR THE PROVIDING AND INSTALLING OF BOILER EMERGENCY SHUTDOWN CONTROLS. PROVIDE ALL CONNECTIONS AND APPURTENANCES AS REQUIRED BY ASME CSD-1 AND MECHANICAL SHEETS.
25. WATER FILL CONTROL PANEL. COORDINATE AND PROVIDE POWER AND CONTROL CONNECTIONS AS REQUIRED.

GENERAL NOTES

1. ALL RECEPTACLES LOCATED IN THE MAINTENANCE AND GENERAL USE BAYS ARE TO BE LOCATED +48" ABOVE THE FLOOR.
2. REFERENCE G1.3 FOR EXTENT OF R-2 DORMITORY. ELECTRICAL SYSTEMS WITHIN THIS AREA SHALL BE PROTECTED BY ARC-FAULT CIRCUIT BREAKERS AS REQUIRED BY THE NEC 210.12.
3. PROVIDE SOFT START MOTOR STARTERS FOR MOTORS OVER 5HP.
4. THE CONTRACTOR SHALL SIZE CONDUCTORS TO PROVIDE MAXIMUM VOLTAGE DROP NOT TO EXCEED 3% IN BRANCH CIRCUITS OR FEEDERS.
5. GFCI RECEPTACLES SHALL BE LOCATED IN A READILY ACCESSIBLE LOCATION PER NEC 210.8. IF NOT POSSIBLE, PROVIDE CIRCUITS SUPPLIED BY A 5mA GFCI CIRCUIT BREAKER.
6. COORDINATE WITH GENERAL CONTRACTOR TO ENSURE NEC REQUIRED WORKING CLEARANCES AND SPACES ARE MAINTAINED AROUND ELECTRICAL EQUIPMENT SUCH AS DISTRIBUTION EQUIPMENT, PANELS, DISCONNECTS, MOTOR STARTERS, ETC. PER NEC 110.26. WHERE NECESSARY, PROVIDE STRUCTURAL CHANNEL (UNISTRUT) SUPPORT FOR INSTALLATION.
7. COORDINATE EXACT LOCATIONS AND REQUIREMENTS OF MECHANICAL ITEMS PRIOR TO ROUGH-IN. PROVIDE ALL REQUIRED APPURTENANCES AND POWER AND CONTROL CONNECTIONS AS NEEDED FOR EQUIPMENT TO OPERATE AS COMPLETE AND FULLY OPERATIONAL SYSTEMS AS INTENDED AND INDICATED IN THE DRAWINGS, SPECIFICATIONS, AND IN THE MECHANICAL SEQUENCE OF OPERATIONS. ALL REQUIRED LINE AND LOW VOLTAGE CONNECTIONS INCLUDING INTERCONNECTING CONTROL WIRING, MAY NOT BE SHOWN IN THESE DRAWINGS, BUT MAY BE REQUIRED, AND IF SO ARE TO BE PROVIDED. REFERENCE MECHANICAL DOCUMENTS FOR LOCATIONS AND REQUIREMENTS.

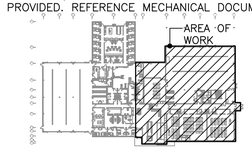

KEYPLAN

STATE OF ALASKA 49TH BRETT A. BINGHAM EE-10821 5-9-18 REGISTERED PROFESSIONAL ENGINEER

Burkhart Croft ARCHITECTS LLC
880 N Street Suite 302 | Anchorage Alaska 99501
T: 907.929.9334 | www.burkhart-croft.com

HZA ENGINEERING SOLUTIONS
HZA Engineering, LLC
113 W. Northern Lights Blvd., Suite 240
Anchorage, Alaska 99503
Tel. (907) 562-1012 Fax (907) 562-1013
AK Corporation # AECL681

MATANUSKA-SUSITNA BOROUGH

MSB FIRE STATION 6-2

WASILLA, ALASKA

DATE:	5/9/2018
DRAWN:	DJL
CHECKED:	BAB
PROJECT:	2017.064.0
DRAWING TITLE:	POWER PLAN - AREA C
REVISIONS:	
SHEET NO:	E3.3

GENERAL NOTES

1. ALL RECEPTACLES LOCATED IN THE MAINTENANCE AND GENERAL USE BAYS ARE TO BE LOCATED +48" ABOVE THE FLOOR.
2. REFERENCE G1.3 FOR EXTENT OF R–2 DORMITORY. ELECTRICAL SYSTEMS WITHIN THIS AREA SHALL BE PROTECTED BY ARC–FAULT CIRCUIT BREAKERS AS REQUIRED BY THE NEC 210.12.
3. PROVIDE SOFT START MOTOR STARTERS FOR MOTORS OVER 5HP.
4. THE CONTRACTOR SHALL SIZE CONDUCTORS TO PROVIDE MAXIMUM VOLTAGE DROP NOT TO EXCEED 3% IN BRANCH CIRCUITS OR FEEDERS.
5. GFCI RECEPTACLES SHALL BE LOCATED IN A READILY ACCESSIBLE LOCATION PER NEC 210.8. IF NOT POSSIBLE, PROVIDE CIRCUITS SUPPLIED BY A 5mA GFCI CIRCUIT BREAKER.
6. COORDINATE WITH GENERAL CONTRACTOR TO ENSURE NEC REQUIRED WORKING CLEARANCES AND SPACES ARE MAINTAINED AROUND ELECTRICAL EQUIPMENT SUCH AS DISTRIBUTION EQUIPMENT, PANELS, DISCONNECTS, MOTOR STARTERS, ETC. PER NEC 110.26. WHERE NECESSARY, PROVIDE STRUCTURAL CHANNEL (UNISTRUT) SUPPORT FOR INSTALLATION.
7. COORDINATE EXACT LOCATIONS AND REQUIREMENTS OF MECHANICAL ITEMS PRIOR TO ROUGH–IN. PROVIDE ALL REQUIRED APPURTENANCES AND POWER AND CONTROL CONNECTIONS AS NEEDED FOR EQUIPMENT TO OPERATE AS COMPLETE AND FULLY OPERATIONAL SYSTEMS AS INTENDED AND INDICATED IN THE DRAWINGS, SPECIFICATIONS, AND IN THE MECHANICAL SEQUENCE OF OPERATIONS. ALL REQUIRED LINE AND LOW VOLTAGE CONNECTIONS INCLUDING INTERCONNECTING CONTROL WIRING, MAY NOT BE SHOWN IN THESE DRAWINGS, BUT MAY BE REQUIRED, AND IF SO ARE TO BE PROVIDED. REFERENCE MECHANICAL DOCUMENTS FOR LOCATIONS AND REQUIREMENTS.

SHEET NOTES

INDICATED BY: (#)

THE FOLLOWING SHEET NOTES ARE A COMPREHENSIVE LIST APPLYING TO SHEETS E3.1, E3.2, E3.3, E3.4, AND E3.5. NOT ALL NOTES APPLY TO EACH SHEET.

1. UNLESS OTHERWISE NOTED, ALL RECEPTACLES IN THIS ROOM TO BE MOUNTED AT A MINIMUM OF +24" ABOVE THE FLOOR.
2. CEILING FAN SPEED CONTROL, CONNECT TO FANS ABOVE. COORDINATE WITH MANUFACTURER FOR WIRING REQUIREMENTS.
3. JUNCTION BOX AND DISCONNECT SWITCH FOR CONNECTION TO OVERFLOW SCUPPER HEATTRACE. PROVIDE HEATTRACE AND ALL REQUIRED APPURTENANCES TO HEATTRACE DOWNSPOUT AS REQUIRED BY THE MECHANICAL DRAWINGS. COORDINATE EXACT LOCATION. PROVIDE & CONNECT TO PILOT LIGHT SWITCH CONTROLS ADJACENT TO THE SERVING PANELBOARD OR AS OTHERWISE INDICATED BY OWNER.
4. PROVIDE CONDUIT, CONTROL WIRING, AND CONNECTIONS BETWEEN OIL/WATER SEPARATOR CONTROL PANEL AND TANK. INSTALL PER THE MANUFACTURER'S INSTALLATION INSTRUCTIONS.
5. COORDINATE HEIGHTS AND LOCATION FOR ALL DEVICES ASSOCIATED WITH TV SCREEN PRIOR TO ROUGH IN.
6. COORDINATE HEIGHTS AND LOCATION FOR ALL DEVICES IN THIS ROOM WITH ARCHITECTURAL.
7. PROVIDE EQUIPMENT, CONNECTIONS, AND CONTROLS BETWEEN CARBON MONOXIDE DETECTORS, NITROGEN DIOXIDE DETECTORS, DDC, AND EXHAUST FANS AS REQUIRED FOR INTENDED OPERATION AND AS INDICATED BY THE MECHANICAL SEQUENCE OF OPERATIONS.
8. PROVIDE CONNECTIONS AS REQUIRED BETWEEN OVERHEAD DOOR OPERATOR, UP/DOWN/STOP CONTROLS, SAFETY INTERLOCKS, ETC.
9. OUTLET AND SPEAKERS FOR CLASSROOM SOUND FIELD SYSTEM, LIGHTSPEED TECHNOLOGIES PHONIC EAR OR EQUAL. CONTRACTOR TO PROVIDE DESIGN AND INSTALLATION OF SYSTEM AS APPROPRIATE. COORDINATE EXACT LOCATIONS AND REQUIREMENTS WITH OWNER AND AS APPROPRIATE FOR SYSTEM COMPONENTS PRIOR TO ROUGH–IN.
10. EXHAUST FAN (120V) TO BE CONTROLLED BY SAME OCCUPANCY SENSOR CONTROLLING LIGHTING (277V) IN THIS ROOM. FAN IS TO RUN FOR AN ADDITIONAL 15 MINUTES AFTER LIGHTING TURNS OFF.
11. FIRE PUMP AND ASSOCIATED EQUIPMENT. COORDINATE FINAL PUMP SIZE AND ANY ADDITIONAL REQUIREMENTS (JOCKEY PUMP, ETC.) WITH FIRE PROTECTION SYSTEM DESIGN AND EQUIPMENT SUPPLIED. PROVIDE ALL WORK IN COMPLIANCE WITH THE REQUIREMENTS OF NEC ARTICLE 695 AND NFPA 20.
12. SEE SINGLE LINE DIAGRAM, 1/E5.1 FOR CONDUCTOR AND CONDUIT SIZES.
13. PROVIDE CONDUIT AND SIGNAL CABLING (VGA, HDMI, ETC) AS NECESSARY FOR CONNECTION FROM PODIUM TO TV SCREEN AND TV SCREEN TO AV CLOSET.
14. RECEPTACLE FOR CONNECTION TO WATER BOTTLE FILLER. COORDINATE EXACT LOCATION AND HEIGHT. RECEPTACLE IS TO BE GFCI PROTECTED. CONNECT TO THE LOAD SIDE OF A 5mA GFCI RECEPTACLE ON THE SAME CIRCUIT.
15. RANGE HOOD (RH–1) 5A, 120V. CIRCUIT TO LE–28. PROVIDE CONNECTIONS TO GAS SOLENOID VALVES FOR SHUTTING OFF RANGE. REFERENCE MECHANICAL SCHEDULE.
16. GENERATOR REMOTE ANNUNCIATOR PANEL. PROVIDE POWER AND CONTROL CONNECTIONS AS REQUIRED FOR PROPER OPERATION. COORDINATE LOCATION.
17. RECEPTACLE FOR BUILT–IN MICROWAVE, COORDINATE EXACT HEIGHT AND LOCATION, CIRCUIT TO LE–32.
18. PANIC BUTTON IS TO LOCK EXTERIOR AND INTERIOR DOORS WITH ELECTRIC LOCKS AND NOTIFY MONITORING AGENCY. PROVIDE CONNECTIONS AS REQUIRED.
19. POWER FOR RACK MOUNTED CAMERA SURVEILLANCE EQUIPMENT.
20. RADIO ANTENNA ARRAY AND MICROWAVE DISH ANTENNA ON ROOF WITH CONDUIT (2", VERIFY) AND PULLSTRING TO TELECOMM ROOM. COORDINATE EXACT LOCATIONS AND REQUIREMENTS INCLUDING ANY NECESSARY GROUNDING WITH OWNER PRIOR TO INSTALLATION,
21. PROVIDE POWER AND CONTROL CONNECTIONS BETWEEN CONDENSING UNIT ON ROOF AND INDOOR COOLING UNIT IN "IT" ROOM.
22. PROVIDE CABLE TRAY IN "IT" ROOM AS APPROPRIATE.
23. JUNCTION BOX AND DISCONNECT SWITCH FOR CONNECTION TO UNDERGROUND RAINLEADER/STORM DRAIN PIPING HEATTRACE. PROVIDE HEATTRACE AND ALL REQUIRED APPURTENANCES TO HEATTRACE PIPING FROM BUILDING TO DRYWELL OR RETENTION POND AS REQUIRED BY THE CIVIL DRAWINGS. COORDINATE EXACT LOCATIONS, LENGTHS, ROUTING, AND REQUIREMENTS. PROVIDE & CONNECT TO PILOT LIGHT SWITCH CONTROLS ADJACENT TO THE SERVING PANELBOARD.
24. COORDINATE WITH MECHANICAL FOR THE PROVIDING AND INSTALLING OF BOILER EMERGENCY SHUTDOWN CONTROLS. PROVIDE ALL CONNECTIONS AND APPURTENANCES AS REQUIRED BY ASME CSD–1 AND MECHANICAL SHEETS.
25. WATER FILL CONTROL PANEL. COORDINATE AND PROVIDE POWER AND CONTROL CONNECTIONS AS REQUIRED.

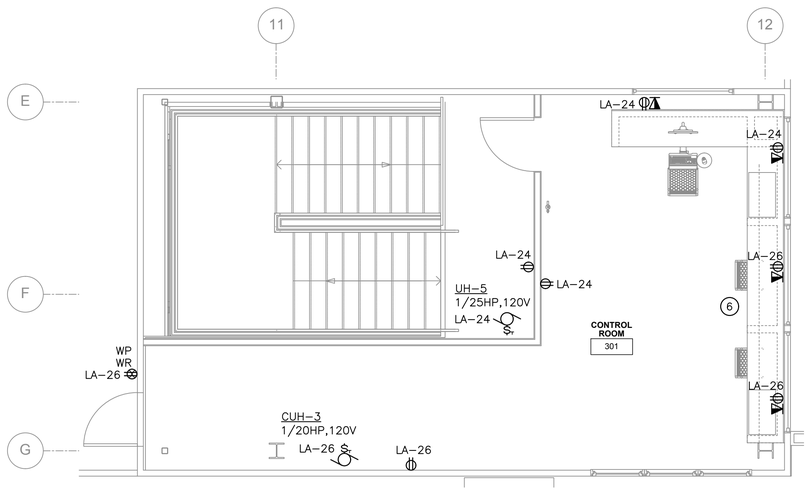

1 E3.4 POWER AND SIGNAL PLAN - ROOF ACCESS

SCALE: 1/4" = 1'-0"

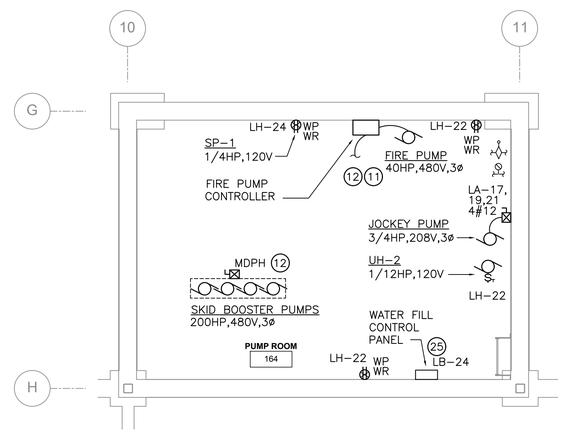

3 E3.4 POWER AND SIGNAL PLAN - PUMP ROOM

SCALE: 1/4" = 1'-0"

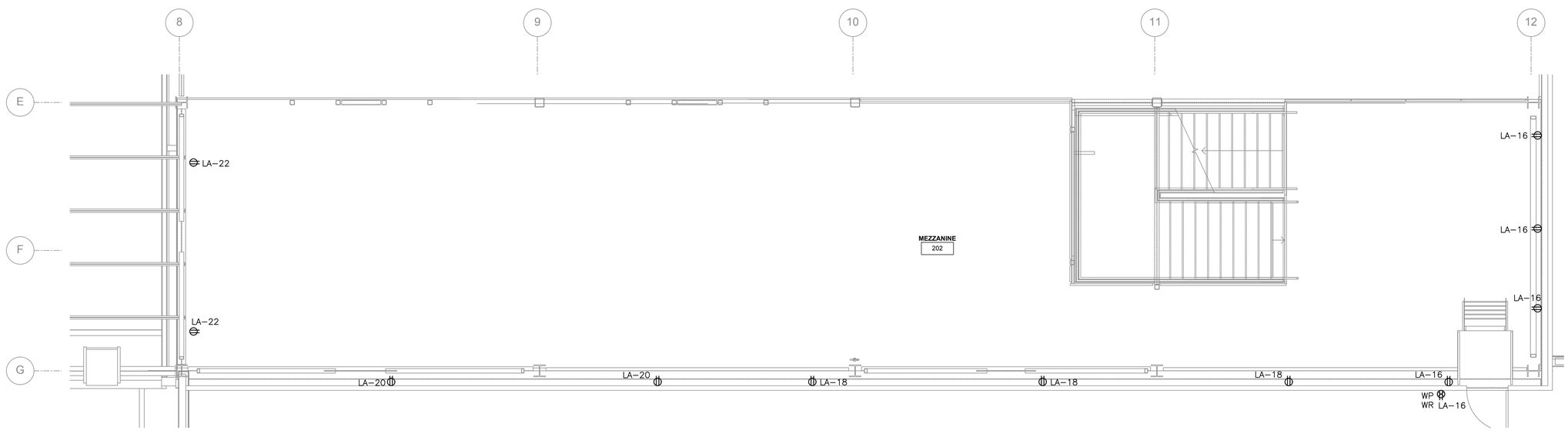

2 E3.4 POWER AND SIGNAL PLAN - MEZZANINE

SCALE: 1/4" = 1'-0"

STATE OF ALASKA 49TH BRETT A. BINGHAM EE-10821 5-9-18 REGISTERED PROFESSIONAL ENGINEER

Burkhart Croft ARCHITECTS LLC
880 N Street Suite 302 | Anchorage Alaska 99501
T: 907.929.9334 | www.burkhart-croft.com

HZA ENGINEERING SOLUTIONS
HZA Engineering, LLC
113 W. Northern Lights Blvd., Suite 240
Anchorage, Alaska 99503
Tel. (907) 562-1012 Fax (907) 562-1013
AK Corporation # AECL081

MATANUSKA-SUSITNA BOROUGH

MSB FIRE STATION 6-2

WASILLA, ALASKA

DATE:	5/9/2018
DRAWN:	DJL
CHECKED:	BAB
PROJECT:	2017.064.0
DRAWING TITLE:	MEZZANINE, PUMP ROOM, AND STAIR LANDING POWER PLANS
REVISIONS:	
SHEET NO:	**E3.4**

GENERAL NOTES

1. ALL RECEPTACLES LOCATED IN THE MAINTENANCE AND GENERAL USE BAYS ARE TO BE LOCATED +48" ABOVE THE FLOOR.
2. REFERENCE G1.3 FOR EXTENT OF R–2 DORMITORY. ELECTRICAL SYSTEMS WITHIN THIS AREA SHALL BE PROTECTED BY ARC–FAULT CIRCUIT BREAKERS AS REQUIRED BY THE NEC 210.12.
3. PROVIDE SOFT START MOTOR STARTERS FOR MOTORS OVER 5HP.
4. THE CONTRACTOR SHALL SIZE CONDUCTORS TO PROVIDE MAXIMUM VOLTAGE DROP NOT TO EXCEED 3% IN BRANCH CIRCUITS OR FEEDERS.
5. GFCI RECEPTACLES SHALL BE LOCATED IN A READILY ACCESSIBLE LOCATION PER NEC 210.8. IF NOT POSSIBLE, PROVIDE CIRCUITS SUPPLIED BY A 5mA GFCI CIRCUIT BREAKER.
6. COORDINATE WITH GENERAL CONTRACTOR TO ENSURE NEC REQUIRED WORKING CLEARANCES AND SPACES ARE MAINTAINED AROUND ELECTRICAL EQUIPMENT SUCH AS DISTRIBUTION EQUIPMENT, PANELS, DISCONNECTS, MOTOR STARTERS, ETC. PER NEC 110.26. WHERE NECESSARY, PROVIDE STRUCTURAL CHANNEL (UNISTRUT) SUPPORT FOR INSTALLATION.
7. COORDINATE EXACT LOCATIONS AND REQUIREMENTS OF MECHANICAL ITEMS PRIOR TO ROUGH–IN. PROVIDE ALL REQUIRED APPURTENANCES AND POWER AND CONTROL CONNECTIONS AS NEEDED FOR EQUIPMENT TO OPERATE AS COMPLETE AND FULLY OPERATIONAL SYSTEMS AS INTENDED AND INDICATED IN THE DRAWINGS, SPECIFICATIONS, AND IN THE MECHANICAL SEQUENCE OF OPERATIONS. ALL REQUIRED LINE AND LOW VOLTAGE CONNECTIONS INCLUDING INTERCONNECTING CONTROL WIRING, MAY NOT BE SHOWN IN THESE DRAWINGS, BUT MAY BE REQUIRED, AND IF SO ARE TO BE PROVIDED. REFERENCE MECHANICAL DOCUMENTS FOR LOCATIONS AND REQUIREMENTS.

SHEET NOTES

INDICATED BY: (#)

THE FOLLOWING SHEET NOTES ARE A COMPREHENSIVE LIST APPLYING TO SHEETS E3.1, E3.2, E3.3, E3.4, AND E3.5. NOT ALL NOTES APPLY TO EACH SHEET.

1. UNLESS OTHERWISE NOTED, ALL RECEPTACLES IN THIS ROOM TO BE MOUNTED AT A MINIMUM OF +24" ABOVE THE FLOOR.
2. CEILING FAN SPEED CONTROL, CONNECT TO FANS ABOVE. COORDINATE WITH MANUFACTURER FOR WIRING REQUIREMENTS.
3. JUNCTION BOX AND DISCONNECT SWITCH FOR CONNECTION TO OVERFLOW SCUPPER HEATTRACE. PROVIDE HEATTRACE AND ALL REQUIRED APPURTENANCES TO HEATTRACE DOWNSPOUT AS REQUIRED BY THE MECHANICAL DRAWINGS. COORDINATE EXACT LOCATION. PROVIDE & CONNECT TO PILOT LIGHT SWITCH CONTROLS ADJACENT TO THE SERVING PANELBOARD OR AS OTHERWISE INDICATED BY OWNER.
4. PROVIDE CONDUIT, CONTROL WIRING, AND CONNECTIONS BETWEEN OIL/WATER SEPARATOR CONTROL PANEL AND TANK. INSTALL PER THE MANUFACTURER'S INSTALLATION INSTRUCTIONS.
5. COORDINATE HEIGHTS AND LOCATION FOR ALL DEVICES ASSOCIATED WITH TV SCREEN PRIOR TO ROUGH IN.
6. COORDINATE HEIGHTS AND LOCATION FOR ALL DEVICES IN THIS ROOM WITH ARCHITECTURAL.
7. PROVIDE EQUIPMENT, CONNECTIONS, AND CONTROLS BETWEEN CARBON MONOXIDE DETECTORS, NITROGEN DIOXIDE DETECTORS, DDC, AND EXHAUST FANS AS REQUIRED FOR INTENDED OPERATION AND AS INDICATED BY THE MECHANICAL SEQUENCE OF OPERATIONS.
8. PROVIDE CONNECTIONS AS REQUIRED BETWEEN OVERHEAD DOOR OPERATOR, UP/DOWN/STOP CONTROLS, SAFETY INTERLOCKS, ETC.
9. OUTLET AND SPEAKERS FOR CLASSROOM SOUND FIELD SYSTEM, LIGHTSPEED TECHNOLOGIES PHONIC EAR OR EQUAL. CONTRACTOR TO PROVIDE DESIGN AND INSTALLATION OF SYSTEM AS APPROPRIATE. COORDINATE EXACT LOCATIONS AND REQUIREMENTS WITH OWNER AND AS APPROPRIATE FOR SYSTEM COMPONENTS PRIOR TO ROUGH–IN.
10. EXHAUST FAN (120V) TO BE CONTROLLED BY SAME OCCUPANCY SENSOR CONTROLLING LIGHTING (277V) IN THIS ROOM. FAN IS TO RUN FOR AN ADDITIONAL 15 MINUTES AFTER LIGHTING TURNS OFF.
11. FIRE PUMP AND ASSOCIATED EQUIPMENT. COORDINATE FINAL PUMP SIZE AND ANY ADDITIONAL REQUIREMENTS (JOCKEY PUMP, ETC.) WITH FIRE PROTECTION SYSTEM DESIGN AND EQUIPMENT SUPPLIED. PROVIDE ALL WORK IN COMPLIANCE WITH THE REQUIREMENTS OF NEC ARTICLE 695 AND NFPA 20.
12. SEE SINGLE LINE DIAGRAM, 1/E5.1 FOR CONDUCTOR AND CONDUIT SIZES.
13. PROVIDE CONDUIT AND SIGNAL CABLING (VGA, HDMI, ETC) AS NECESSARY FOR CONNECTION FROM PODIUM TO TV SCREEN AND TV SCREEN TO AV CLOSET.
14. RECEPTACLE FOR CONNECTION TO WATER BOTTLE FILLER. COORDINATE EXACT LOCATION AND HEIGHT. RECEPTACLE IS TO BE GFCI PROTECTED. CONNECT TO THE LOAD SIDE OF A 5mA GFCI RECEPTACLE ON THE SAME CIRCUIT.
15. RANGE HOOD (RH–1) 5A, 120V. CIRCUIT TO LE–28. PROVIDE CONNECTIONS TO GAS SOLENOID VALVES FOR SHUTTING OFF RANGE. REFERENCE MECHANICAL SCHEDULE.
16. GENERATOR REMOTE ANNUNCIATOR PANEL. PROVIDE POWER AND CONTROL CONNECTIONS AS REQUIRED FOR PROPER OPERATION. COORDINATE LOCATION.
17. RECEPTACLE FOR BUILT–IN MICROWAVE, COORDINATE EXACT HEIGHT AND LOCATION, CIRCUIT TO LE–32.
18. PANIC BUTTON IS TO LOCK EXTERIOR AND INTERIOR DOORS WITH ELECTRIC LOCKS AND NOTIFY MONITORING AGENCY. PROVIDE CONNECTIONS AS REQUIRED.
19. POWER FOR RACK MOUNTED CAMERA SURVEILLANCE EQUIPMENT.
20. RADIO ANTENNA ARRAY AND MICROWAVE DISH ANTENNA ON ROOF WITH CONDUIT (2", VERIFY) AND PULLSTRING TO TELECOMM ROOM. COORDINATE EXACT LOCATIONS AND REQUIREMENTS INCLUDING ANY NECESSARY GROUNDING WITH OWNER PRIOR TO INSTALLATION,
21. PROVIDE POWER AND CONTROL CONNECTIONS BETWEEN CONDENSING UNIT ON ROOF AND INDOOR COOLING UNIT IN "IT" ROOM.
22. PROVIDE CABLE TRAY IN "IT" ROOM AS APPROPRIATE.
23. JUNCTION BOX AND DISCONNECT SWITCH FOR CONNECTION TO UNDERGROUND RAINLEADER/STORM DRAIN PIPING HEATTRACE. PROVIDE HEATTRACE AND ALL REQUIRED APPURTENANCES TO HEATTRACE PIPING FROM BUILDING TO DRYWELL OR RETENTION POND AS REQUIRED BY THE CIVIL DRAWINGS. COORDINATE EXACT LOCATIONS, LENGTHS, ROUTING, AND REQUIREMENTS. PROVIDE & CONNECT TO PILOT LIGHT SWITCH CONTROLS ADJACENT TO THE SERVING PANELBOARD.
24. COORDINATE WITH MECHANICAL FOR THE PROVIDING AND INSTALLING OF BOILER EMERGENCY SHUTDOWN CONTROLS. PROVIDE ALL CONNECTIONS AND APPURTENANCES AS REQUIRED BY ASME CSD–1 AND MECHANICAL SHEETS.
25. WATER FILL CONTROL PANEL. COORDINATE AND PROVIDE POWER AND CONTROL CONNECTIONS AS REQUIRED.

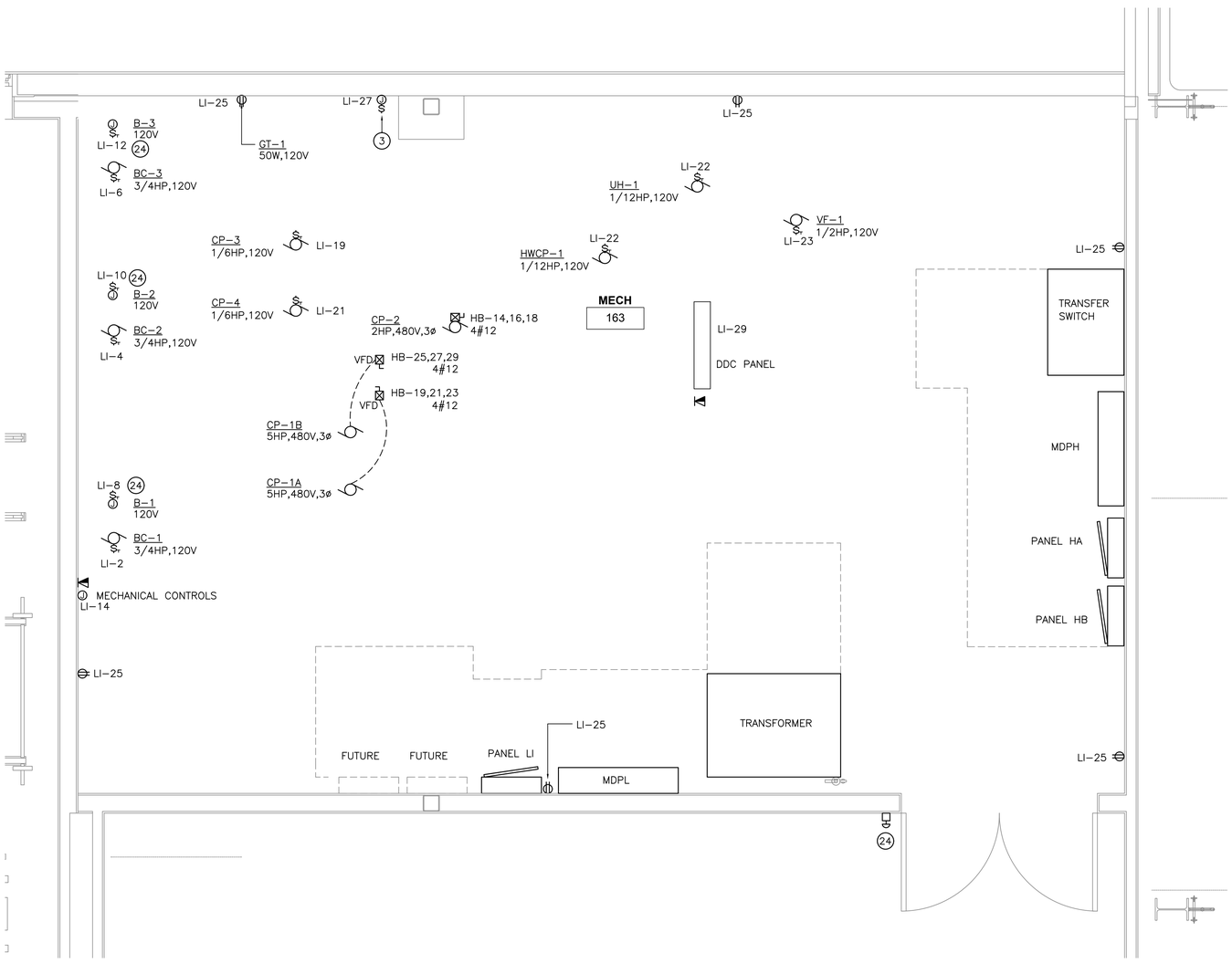

1 E3.5 ENLARGED MECHANICAL ROOM

SCALE: 1/2" = 1'-0"

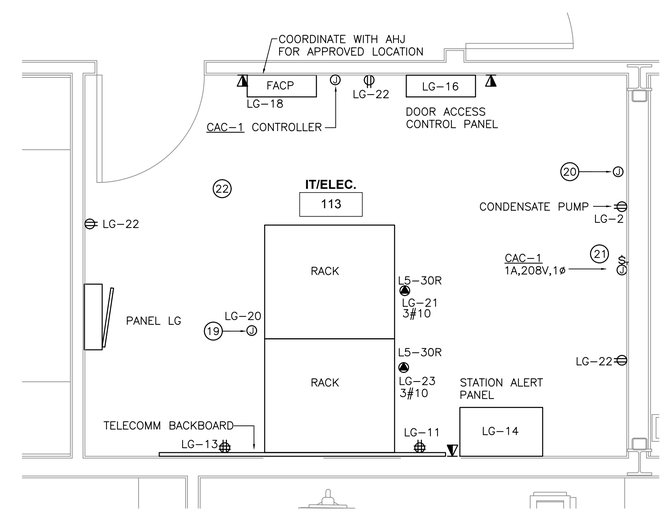

2 E3.5 ENLARGED IT/ELECTRICAL ROOM

SCALE: 1/2" = 1'-0"

STATE OF ALASKA 49TH BRETT A. BINGHAM EE-10821 5-9-18 REGISTERED PROFESSIONAL ENGINEER

Burkhart Croft ARCHITECTS LLC
880 N Street Suite 302 | Anchorage Alaska 99501
T: 907.929.9334 | www.burkhart-croft.com

HZA ENGINEERING SOLUTIONS
HZA Engineering, LLC
113 W. Northern Lights Blvd., Suite 240
Anchorage, Alaska 99503
Tel. (907) 562-1012 Fax (907) 562-1013
AK Corporation # AECL681

MATANUSKA-SUSITNA BOROUGH

MSB FIRE STATION 6-2

WASILLA, ALASKA

DATE:	5/9/2018
DRAWN:	DJL
CHECKED:	BAB
PROJECT:	2017.064.0
DRAWING TITLE:	ENLARGED PLANS
REVISIONS:	
SHEET NO:	**E3.5**

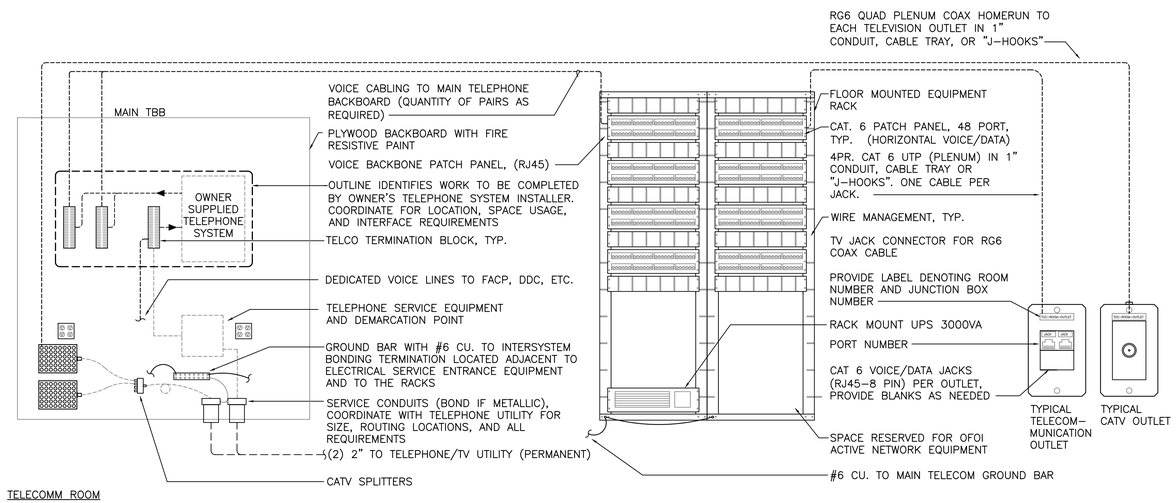

DETAIL NOTES:

1. THE CONTRACTOR SHALL COORDINATE WITH THE LOCAL TELECOMMUNICATION COMPANY FOR EXACT PEDESTAL LOCATIONS, ROUTING, AND ALL OTHER REQUIREMENTS.
2. SEE PLANS FOR PROPOSED QUANTITY AND LOCATION OF DEVICES.
3. PROVIDE PLENUM RATED CATEGORY 6 DATA CABLE FOR ALL DATA, TELEPHONE, AND WIRELESS ACCESS JACKS TO CABLE TRAY, CONDUIT, AND/OR HOOKS AND TERMINATE ON CATEGORY 6 PATCH PANELS. PROVIDE ONE CATEGORY 6 CABLE FOR EACH JACK. TERMINATE ALL CABLES IAW EIA/TIA 568B. VERIFY ALL CABLES TEST TO CATEGORY 6 STANDARDS AND PROVIDE RESULTING TEST DATA TO OWNER'S REPRESENTATIVE. CABLE IS TO BE RUN IN CABLE TRAY OR HOOKS/RINGS WHERE IN ACCESSIBLE CEILING OR IN CONDUIT WHERE CONCEALED.
4. MINIMUM CONDUIT SIZE SHALL BE 1". CONDUITS THAT TERMINATE OR END WITHIN 6" OF CABLE TRAY ARE TO BE BONDED TO THE TRAY.
5. PROVIDE QUANTITY OF 48 PORT PATCH PANELS (HORIZONTAL VOICE/DATA) AS REQUIRED FOR ALL JACKS SHOWN ON THE DRAWINGS, PLUS 25% SPARE.
6. PROVIDE 4U AT THE TOP OF EACH RACK.
7. LABEL EACH PORT OF ALL PATCH PANELS AND EACH JACK OF ALL TELECOMMUNICATION OUTLETS TO DENOTE ROOM NUMBER – JUNCTION BOX NUMBER – CABLE NUMBER. EXAMPLE "101-J4-2".

1 E4.1 VOICE AND DATA CABLING - RISER DIAGRAM

SCALE: NO SCALE

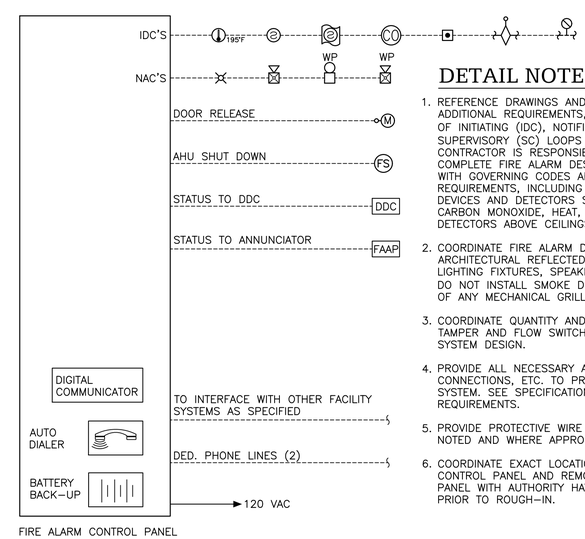

FIRE ALARM CONTROL PANEL

DETAIL NOTES:

1. REFERENCE DRAWINGS AND SPECIFICATIONS FOR ADDITIONAL REQUIREMENTS, PROVIDE NUMBER OF INITIATING (IDC), NOTIFICATION (NAC) AND SUPERVISORY (SC) LOOPS AS REQUIRED. CONTRACTOR IS RESPONSIBLE FOR PROVIDING COMPLETE FIRE ALARM DESIGN IN COMPLIANCE WITH GOVERNING CODES AND OWNER REQUIREMENTS, INCLUDING ANY NECESSARY DEVICES AND DETECTORS SUCH AS SMOKE, CARBON MONOXIDE, HEAT, DOOR HOLDOPENS, DETECTORS ABOVE CEILINGS.
2. COORDINATE FIRE ALARM DEVICES WITH ARCHITECTURAL REFLECTED CEILING PLANS, LIGHTING FIXTURES, SPEAKERS, GRILLS, ETC. DO NOT INSTALL SMOKE DETECTORS WITHIN 3' OF ANY MECHANICAL GRILL OR CEILING FANS.
3. COORDINATE QUANTITY AND LOCATION OF TAMPER AND FLOW SWITCHES WITH SPRINKLER SYSTEM DESIGN.
4. PROVIDE ALL NECESSARY AUXILIARY CONTACTS, CONNECTIONS, ETC. TO PROVIDE A COMPLETE SYSTEM. SEE SPECIFICATIONS FOR ALL REQUIREMENTS.
5. PROVIDE PROTECTIVE WIRE GUARD ON DEVICES NOTED AND WHERE APPROPRIATE.
6. COORDINATE EXACT LOCATION OF FIRE ALARM CONTROL PANEL AND REMOTE ANNUNCIATOR PANEL WITH AUTHORITY HAVING JURISDICTION PRIOR TO ROUGH-IN.

2 E4.1 SCHEMATIC FIRE ALARM RISER DIAGRAM

SCALE: NTS

Burkhart Croft ARCHITECTS LLC
880 N Street Suite 302 | Anchorage Alaska 99501
T: 907.929.9334 | www.burkhart-croft.com

HZA ENGINEERING SOLUTIONS
HZA Engineering, LLC
113 W. Northern Lights Blvd., Suite 240
Anchorage, Alaska 99503
Tel. (907) 562-1012 Fax (907) 562-1013
AK Corporation # AECL081

MATANUSKA-SUSITNA BOROUGH

MSB FIRE STATION 6-2

WASILLA, ALASKA

DATE: 5/9/2018

DRAWN: DJL

CHECKED: BAB

PROJECT: 2017.064.0

DRAWING TITLE: RISER DIAGRAM

REVISIONS:

SHEET NO: **E4.1**

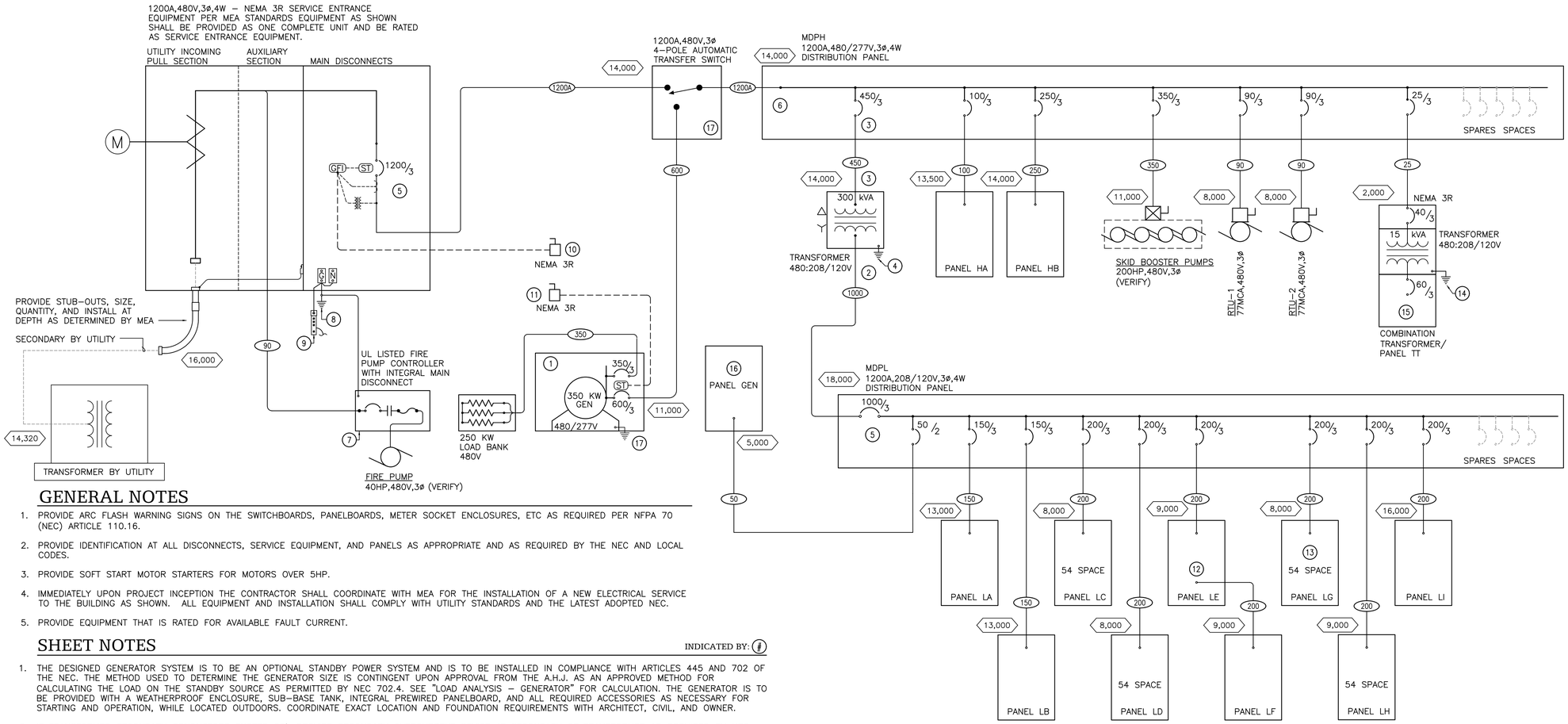

GENERAL NOTES

1. PROVIDE ARC FLASH WARNING SIGNS ON THE SWITCHBOARDS, PANELBOARDS, METER SOCKET ENCLOSURES, ETC AS REQUIRED PER NFPA 70 (NEC) ARTICLE 110.16.
2. PROVIDE IDENTIFICATION AT ALL DISCONNECTS, SERVICE EQUIPMENT, AND PANELS AS APPROPRIATE AND AS REQUIRED BY THE NEC AND LOCAL CODES.
3. PROVIDE SOFT START MOTOR STARTERS FOR MOTORS OVER 5HP.
4. IMMEDIATELY UPON PROJECT INCEPTION THE CONTRACTOR SHALL COORDINATE WITH MEA FOR THE INSTALLATION OF A NEW ELECTRICAL SERVICE TO THE BUILDING AS SHOWN. ALL EQUIPMENT AND INSTALLATION SHALL COMPLY WITH UTILITY STANDARDS AND THE LATEST ADOPTED NEC.
5. PROVIDE EQUIPMENT THAT IS RATED FOR AVAILABLE FAULT CURRENT.

SHEET NOTES

INDICATED BY: (#)

1. THE DESIGNED GENERATOR SYSTEM IS TO BE AN OPTIONAL STANDBY POWER SYSTEM AND IS TO BE INSTALLED IN COMPLIANCE WITH ARTICLES 445 AND 702 OF THE NEC. THE METHOD USED TO DETERMINE THE GENERATOR SIZE IS CONTINGENT UPON APPROVAL FROM THE A.H.J. AS AN APPROVED METHOD FOR CALCULATING THE LOAD ON THE STANDBY SOURCE AS PERMITTED BY NEC 702.4. SEE "LOAD ANALYSIS – GENERATOR" FOR CALCULATION. THE GENERATOR IS TO BE PROVIDED WITH A WEATHERPROOF ENCLOSURE, SUB-BASE TANK, INTEGRAL PREWIRED PANELBOARD, AND ALL REQUIRED ACCESSORIES AS NECESSARY FOR STARTING AND OPERATION, WHILE LOCATED OUTDOORS. COORDINATE EXACT LOCATION AND FOUNDATION REQUIREMENTS WITH ARCHITECT, CIVIL, AND OWNER.
2. IF TRANSFORMER SECONDARY CONDUCTORS EXCEED 25', PROVIDE SECONDARY OVERCURRENT DEVICE AT SECONDARY OF TRANSFORMER AS REQUIRED BY NEC 240.21 (C).
3. CIRCUIT BREAKERS SUPPLYING POWER TO TRANSFORMERS, IF NOT WITHIN SIGHT OF THE TRANSFORMER SHALL BE LOCKABLE WITH LOCATIONS OF THE TRANSFORMER DISCONNECTING MEANS IDENTIFIED ON EACH TRANSFORMER. IF BREAKERS ARE NOT LOCKABLE, PROVIDE DISCONNECTING MEANS (NOT SHOWN) LOCATED ADJACENT TO AND IN SIGHT OF EACH TRANSFORMER PER NEC 450.14. PROVIDE LOCATION OF THE TRANSFORMER DISCONNECTING MEANS IDENTIFIED ON THE TRANSFORMER
4. PROVIDE #3/0 AWG COPPER GROUNDING ELECTRODE CONDUCTOR CONNECTION TO THE NEAREST GROUNDING ELECTRODE AS REQUIRED BY NEC 250.30.
5. PROVIDE WITH ARC ENERGY MITIGATION WHERE REQUIRED BY NEC 240.87.
6. PROVIDE WITH ENERGY MONITORING SYSTEM, PROVIDE CONNECTIONS TO DDC SYSTEM.
7. FIRE PUMP AND ASSOCIATED EQUIPMENT. COORDINATE FINAL PUMP SIZE AND ANY ADDITIONAL REQUIREMENTS (JOCKEY PUMP ETC.) WITH FIRE PROTECTION SYSTEM DESIGN AND EQUIPMENT SUPPLIED. PROVIDE ALL WORK IN COMPLIANCE WITH THE REQUIREMENTS OF NEC ARTICLE 695 AND NFPA 20. PROVIDE A PLACARD ADJACENT TO THE FIRE PUMP CONTROLLER STATING THE LOCATION OF THE DISCONNECTING MEANS AND THE LOCATION OF THE KEY (IF THE DISCONNECTING MEANS IS LOCKED) PER NEC 695.4.
8. PROVIDE GROUNDING ELECTRODE SYSTEM AS FOLLOWS: #3/0 CU. TO WATER MAIN, #3/0 CU. TO BUILDING STEEL, #3/0 CU. TO 20' OF #4 CU. OR 1/2" DIA STEEL REBAR ENCASED IN FOOTING CONCRETE AND BONDED TO REBAR. AND #6 CU. TO DRIVEN ROD ELECTRODES.
9. INTERSYSTEM BONDING TERMINATION PER NEC 250.94 FOR CONNECTION TO COMMUNICATIONS BONDING AND GROUNDING CONDUCTORS.
10. PROVIDE MAIN SHUNT TRIP DISCONNECT SWITCH ADJACENT TO SERVICE ENTRANCE ON BUILDING EXTERIOR. INSTALL KNIFE TYPE SWITCH ACTIVATOR IN A SEPARATE PAD LOCKABLE NEMA 3R ENCLOSURE IN COMPLIANCE WITH UTILITY STANDARDS. PROVIDE LAMINATED ENGRAVED PLACARDS, RED WITH WHITE 1" LETTERING TO READ "MAIN BUILDING DISCONNECT SHUNT TRIP SWITCH". IN COMPLIANCE WITH NEC 702.8 PROVIDE AN ADDITIONAL SIMILAR PLACARD WHICH READS "STANDBY GENERATOR ON SITE. SYSTEM WILL AUTOMATICALLY START UPON LOSS OF UTILITY POWER".
11. PROVIDE GENERATOR SHUNT TRIP DISCONNECT SWITCH ADJACENT TO SERVICE ENTRANCE ON BUILDING EXTERIOR. INSTALL KNIFE TYPE SWITCH ACTIVATOR IN SEPARATE PAD LOCKABLE NEMA 3R ENCLOSURE. PROVIDE A LAMINATED ENGRAVED PLACARD, RED WITH WHITE 1" LETTERING TO READ "GENERATOR DISCONNECT SWITCH".
12. PROVIDE PANELBOARD WTIH FEED THROUGH LUGS.
13. PROVIDE PANELBOARD WITH TRANSIENT VOLTAGE SURGE SUPPRESSION.
14. PROVIDE #6 AWG COPPER GROUNDING ELECTRODE CONDUCTOR CONNECTION AS REQUIRED BY NEC 250.30.
15. CONTRACTOR TO PROVIDE NEW BRANCH CIRCUITRY, AND DISCONNECTING MEANS AT THE TOWER FOR RECONNECTION OF EXISTING TOWER LOADS.
16. PANEL IS TO BE SUPPLIED BY GENERATOR MANUFACTURER AS AN INTEGRAL PIECE OF THE GENERATOR PACKAGE, PREWIRED WITH GENERATOR ASSOCIATED LOADS.
17. FOR A SEPARATELY DERIVED SYSTEM, BOND THE NEUTRAL AND GROUND AT THE GENERATOR, PROVIDE CONNECTIONS TO A GROUNDING ELECTRODE SYSTEM, AND SWITCH THE NEUTRAL AT THE TRANSFER SWITCH. FOR A NON-SEPARATELY DERIVED SYSTEM, THE NEUTRAL IS TO BE ISOLATED FROM THE GROUND AT THE GENERATOR, AND THE NEUTRAL IS NOT TO BE SWITCHED AT THE TRANSFER SWITCH.

1 / E5.1 ELECTRICAL DISTRIBUTION SINGLE LINE DIAGRAM

SCALE: NTS

FEEDER SCHEDULE

TAG ID	QUANTITY	CONDUIT	CONDUCTORS	QUANTITY	CONDUIT	CONDUCTORS
	– – – – – – ALUMINUM CONDUCTORS – – – – – –			– – – – – – – COPPER CONDUCTORS – – – – – – –		
25	1 RUN	1"	3#6,1#6G	1 RUN	1"	3#8,1#8G
50	1 RUN	1"	2#4,1#4N,1#8G	1 RUN	1"	2#6,1#6N,1#10G
90	1 RUN	1¼"	3#1,1#6G	1 RUN	1¼"	3#2,1#8G
100	1 RUN	1½"	3#⅙,1#⅙N,1#6G	1 RUN	1¼"	3#2,1#2N,1#8G
150	1 RUN	2"	3#⅜,1#⅜N,1#4G	1 RUN	1½"	3#⅙,1#⅙N,1#6G
200	1 RUN	2½"	3#250,1#250N,1#4G	1 RUN	2"	3#⅜,1#⅜N,1#6G
250	1 RUN	2½"	3#350,1#350N,1#2G	1 RUN	2½"	3#250,1#250N,1#4G
350	2 RUNS	2½"	3#⅝,3#⅝N,1#1G	1 RUN	3"	3#500,1#500N,1#3G
450	2 RUNS	2½"	3#300,1#⅙G	2 RUNS	2"	3#⅝,1#2G
600	2 RUNS	3"	3#500,1#500N,1#⅝G	2 RUNS	2½"	3#350,1#350N,1#⅝G
1000	4 RUNS	3"	3#350,1#350N,1#⅝G	3 RUNS	3"	3#400,1#400N,1#⅜G
1200A	4 RUNS	3"	3#500,1#500N,1#250G	4 RUNS	3"	3#350,1#350N,1#⅜G

NOTES TO FEEDER SCHEDULE:

1. CONDUCTOR SIZING BASED ON ALUMINUM AND COPPER CONDUCTORS IN METALLIC CONDUIT PER NEC TABLE 310.15(B)(16) USING 60°C RATING FOR CIRCUITS LESS THAN 100 AMPS AND 75°C RATING FOR CIRCUITS GREATER THAN 100 AMPS. CONDUIT SIZING BASED ON TYPE XHHW INSULATED CONDUCTORS IN EMT CONDUIT PER NEC TABLE C1.
2. WHERE USED OUTSIDE, ALUMINUM GROUNDING ELECTRODE CONDUCTORS SHALL NOT BE TERMINATED WITHIN 18" OF THE EARTH (NEC 250.64).
3. UNLESS NOTED OTHERWISE NEUTRAL CONDUCTOR NOT REQUIRED FOR MOTOR FEEDERS AND TRANSFORMER PRIMARY FEEDERS.

FAULT CURRENT ANALYSIS

BASIS OF CALCULATIONS: DATE OF CALCULATION: 04/20/2018

VARIABLE	VALUE
UTILITY	
PRIMARY BUS	INFINITE MVA
UTILITY TRANSFORMER RATING CALCULATIONS BASED ON	300 KVA
VOLTAGE (LINE TO LINE)	277/480 VOLTS, 3ø
UTILITY TRANSFORMER IMPEDANCE CALCULATIONS BASED ON	2.52%Z
SERVICE LATERAL LENGTH	50 FT
SERVICE LATERAL CONDUCTOR SIZE	350 kcmil AL
CONDUCTORS PER PHASE	4
CONDUIT TYPE	NON-MAGNETIC
BUILDING TRANSFORMER RATING	
RATING	300 KVA
VOLTAGE	480:120/208 VOLTS, 3ø
TRANSFORMER IMPEDANCE	4.4%Z
MOTOR CONTRIBUTION	APPROXIMATELY 400 HP

CALCULATION SUMMARY:

LOCATION	SHORT CIRCUIT CURRENT
xx,xxx	SEE DRAWINGS FOR CURRENT

CONTRACTOR TO CONFIRM ACTUAL VALUES OF ABOVE LISTED CALCULATION VARIABLES WITH SERVING UTILITY PRIOR TO ORDERING EQUIPMENT. IF ELECTRICAL UTILITY EQUIPMENT AND INSTALLATION DEVIATES FROM THE BASIS ITEMIZED ABOVE, THE CONTRACTOR SHALL CONSULT WITH THE ENGINEER OF RECORD TO CONFIRM THE AIC RATING REQUIRED FOR ELECTRICAL DISTRIBUTION EQUIPMENT. ALL EQUIPMENT SHALL BE RATED FOR AVAILABLE FAULT CURRENT AND LABELED PER NEC 110.24 WITH THE MAXIMUM AVAILABLE FAULT CURRENT WITH THE DATE THE CALCULATIONS WERE PERFORMED.

STATE OF ALASKA 49TH BRETT A. BINGHAM EE-10821 5-9-18 REGISTERED PROFESSIONAL ENGINEER

Burkhart Croft ARCHITECTS LLC
880 N Street Suite 302 | Anchorage Alaska 99501
T: 907.929.9334 | www.burkhart-croft.com

HZA ENGINEERING SOLUTIONS
HZA Engineering, LLC
113 W. Northern Lights Blvd., Suite 240
Anchorage, Alaska 99503
Tel. (907) 562-1012 Fax (907) 562-1013
AK Corporation # AECL081

MATANUSKA-SUSITNA BOROUGH

MSB FIRE STATION 6-2

WASILLA, ALASKA

DATE: 5/9/2018

DRAWN: DJL

CHECKED: BAB

PROJECT: 2017.064.0

DRAWING TITLE: SINGLE LINE DIAGRAM

REVISIONS:

SHEET NO: E5.1

LOAD ANALYSIS - ELECTRICAL SERVICE

	CONNECTED	DEMAND
GENERAL LIGHTING LOAD	38.6 kVA	48.3 kVA
CONVENIENCE RECEPTACLE LOAD	83.7 kVA	46.8 kVA
MISC. LOAD	150.6 kVA	150.6 kVA
MECHANICAL LOAD	498.8 kVA	498.8 kVA
FIRE PUMP	43.2 kVA	54.0 kVA
TOTAL LOAD (per NEC 220)	814.9 kVA	**798.6 kVA**
.9 Power Factor	733.4 kW	**718.7 kW**
@277/480 Volt, 3 Phase, 4 Wire	980.6 A	**961.0 A**

LOAD ANALYSIS - PANEL MDPH

	CONNECTED	DEMAND
GENERAL LIGHTING LOAD	38.6 kVA	48.3 kVA
CONVENIENCE RECEPTACLE LOAD	83.7 kVA	46.8 kVA
MISC. LOAD	150.6 kVA	150.6 kVA
MECHANICAL LOAD	498.8 kVA	498.8 kVA
TOTAL LOAD (per NEC 220)	771.7 kVA	**744.6 kVA**
.9 Power Factor	694.5 kW	**670.1 kW**
@277/480 Volt, 3 Phase, 4 Wire	928.6 A	**896.0 A**

LOAD ANALYSIS - PANEL MDPL

	CONNECTED	DEMAND
GENERAL LIGHTING LOAD	2.7 kVA	3.4 kVA
CONVENIENCE RECEPTACLE LOAD	82.8 kVA	46.4 kVA
MISC. LOAD	145.1 kVA	152.9 kVA
MECHANICAL LOAD	35.9 kVA	36.3 kVA
TOTAL LOAD (per NEC 220)	266.5 kVA	**239.0 kVA**
.9 Power Factor	239.8 kW	**215.1 kW**
@120/208 Volt, 3 Phase, 4 Wire	740.2 A	**663.8 A**

LOAD ANALYSIS - GENERATOR

GENERATOR SIZING IS BASED UPON HISTORICAL USAGE FROM A SIMILAR FACILITY (FIRESTATION 5-1) THAT WAS RECENTLY DESIGNED AND CONSTRUCTED IN THE MAT-SU BOROUGH. HISTORICAL PEAK USAGE WAS OBTAINED FROM THE LOCAL UTILITY COMPANY AND WAS COMPARED TO THE CALCULATED DEMAND LOAD THAT WAS DETERMINED BY THE ELECTRICAL ENGINEER FOR THAT SAME FACILITY. THE RATIO OF ACTUAL PEAK DEMAND TO CALCULATED DEMAND OF THE EXISTING FACILITY WAS THEN MULTIPLIED BY A 125% SAFETY FACTOR AND AGAIN MULTIPLED BY THE CALCULATED DEMAND LOAD OF THIS NEW FIRESTATION. THE CONNECTED LOAD OF THE LARGEST MOTOR LOAD (SKID BOOSTER PUMPS) WAS THEN ADDED TO THE MULTIPLIED RATIOS TO DETERMINE AN ESTIMATED BUT REALISTIC PEAK USAGE FOR THE NEW FACILITY.

EXISTING FIRESTATION 5-1

SQUARE FEET	27,374 SF	
CALCULATED DEMAND LOAD	463.4 kVA	
PEAK DEMAND (12-mo. demand per Utility Company)		69.6 kW
.8 Power Factor		87.0 kVA
@ 125% per NEC 220.88		108.8 kVA
@277/480 Volt, Three Phase, Four Wire		130.9 A

MSB FIRESTATION 6-2

SQUARE FEET	38,125 SF	
CALCULATED DEMAND LOAD	744.6 kVA	
ESTIMATED PEAK DEMAND		390.8 kVA
.8 Power Factor		312.6 kW
@277/480 Volt, Three Phase, Four Wire		470.3 A

THE 350kW OPTIONAL STANDBY GENERATOR HAS ADEQUATE CAPACITY TO POWER THE ANTICIPATED LOAD OF THE FACILITY.

MDPH

277/480V,3PH,4W

CKT	AMP	POLE	LOAD DESCRIPTION	PHASE A VA		PHASE B VA		PHASE C VA		LOAD DESCRIPTION	POLE	AMP	CKT
1	*		TRANSFORMER (MDPL)	95,460	21,340					RTU-1		*	2
						86,735	21,340						
		3						84,285	21,340		3		
3	*		PANEL HA	13,470	21,340					RTU-2		*	4
						10,985	21,340						
		3						10,570	21,340		3		
5	*		PANEL HB	39,760						SPACE		-	6
						39,760							
		3						39,760			3		
7	*		PANEL TT (TRANSFORMER)	2,500						SPACE		-	8
						2,500							
		3						1,800			3		
9	*		SKID BOOSTER PUMPS	72,020						SPACE		-	10
						72,020							
		3						72,020			3		
CONNECTED LOAD (VA)				265,890		254,680		251,115		771,685 VA			
CONNECTED LOAD (AMPERES)				960		919		907		929 A			
DEMAND LOAD (VA)				SEE "LOAD ANALYSIS - PANEL MDPH"							VA		
DEMAND LOAD (AMPERES)											A		
AMPERE INTERRUPT RATING				AS INDICATED BY THE FAULT CURRENT ANALYSIS									

* - SEE SINGLE LINE DIAGRAM FOR CIRCUIT BREAKER SIZES.

MDPL

120/208V,3PH,4W

CKT	AMP	POLE	LOAD DESCRIPTION	PHASE A VA		PHASE B VA		PHASE C VA		LOAD DESCRIPTION	POLE	AMP	CKT
1	*		PANEL LA	7,975	9,460					PANEL LG		*	2
						6,195	8,225						
		3						7,585	8,720		3		
3	*		PANEL LB	10,725	10,780					PANEL LH		*	4
						10,280	7,740						
		3						8,950	8,200		3		
5	*		PANEL LC	13,370	7,185					PANEL LI		*	6
						14,040	6,380						
		3						13,290	7,480		3		
7	*		PANEL LD	17,455	4,000					PANEL GEN		*	8
						16,035	4,000						
		3						17,820			2		
9	*		PANELS LE & LF	14,510						SPACE		-	10
						13,840							
		3						12,240			3		
11	-		SPACE							SPACE		-	12
		3									3		
13	-		SPACE							SPACE		-	14
		3									3		
CONNECTED LOAD (VA)				95,460		86,735		84,285		266,480 VA			
CONNECTED LOAD (AMPERES)				796		723		702		740 A			
DEMAND LOAD (VA)				SEE "LOAD ANALYSIS - PANEL MDPL"							VA		
DEMAND LOAD (AMPERES)											A		
AMPERE INTERRUPT RATING				AS INDICATED BY THE FAULT CURRENT ANALYSIS									

* - SEE SINGLE LINE DIAGRAM FOR CIRCUIT BREAKER SIZES.

PANEL HA SCHEDULE

250A MLO

277/480V,3PH,4W

CKT	AMP	POLE	LOAD DESCRIPTION	PHASE A VA		PHASE B VA		PHASE C VA		LOAD DESCRIPTION	POLE	AMP	CKT
1	20	1	LTG-APP BAY 114 SOUTH	3,000	3,100					LTG-1ST FLOOR NORTH	1	20	2
3	20	1	LTG-APP BAY 114 NORTH			3,000	2,935			LTG-1ST FLOOR CENTRAL	1	20	4
5	20	1	LTG-GEN BAY 161 WEST					3,000	2,765	LTG-1ST FLOOR SOUTH	1	20	6
7	20	1	LTG-GEN BAY 161 EAST	3,000	3,420					LTG-1ST FLOOR LOBBY	1	20	8
9	20	1	LTG-EXTERIOR			1,850	3,200			LTG-CLASSROOMS	1	20	10
11	20	1	LTG-POLE LIGHTS					1,550	3,255	LTG-EAST/PUMP ROOM2ND/3RD	1	20	12
13	20	1	LTG-POLE LIGHTS TRAINING TOWER	950						SPARE	1	20	14
15	20	1	SPARE							SPARE	1	20	16
17	20	1	SPARE							SPARE	1	20	18
19	20	1	SPARE							SPARE	1	20	20
21	20	1	SPARE							SPARE	1	20	22
23	20	1	SPARE							SPARE	1	20	24
25	20	1	SPARE							SPARE	1	20	26
27	20	1	SPARE							SPARE	1	20	28
29	20	1	SPARE							SPARE	1	20	30
31	20	1	SPARE							SPARE	1	20	32
33	20	1	SPARE							SPARE	1	20	34
35	20	1	SPARE							SPARE	1	20	36
37	20	1	SPARE							SPARE	1	20	38
39	20	1	SPARE							SPARE	1	20	40
41	20	1	SPARE							SPARE	1	20	42
CONNECTED LOAD (VA)				13,470		10,985		10,570		35,025 VA			
CONNECTED LOAD (AMPERES)				49		40		38		42 A			
DEMAND LOAD (VA)				16,838		13,731		13,213		43,781 VA			
DEMAND LOAD (AMPERES)				61		50		48		53 A			
AMPERE INTERRUPT RATING				AS INDICATED BY THE FAULT CURRENT ANALYSIS									

PANEL HB SCHEDULE

250A MLO

277/480V,3PH,4W

	CKT	AMP	POLE	LOAD DESCRIPTION	PHASE A VA		PHASE B VA		PHASE C VA		LOAD DESCRIPTION	POLE	AMP	CKT	
	1	40		AC-2	5,820	7,480					SCBA COMPRESSOR		60	2	
	3						5,820	7,480						4	
	5		3						5,820	7,480		3		6	
	7	40		AC-1	5,820	11,085					WELL PUMP WEST		80	8	L
	9						5,820	11,085						10	
	11		3						5,820	11,085		3		12	
L	13	20		WELL PUMP NORTHEAST	2,110	945					CP-2		20	14	
	15						2,110	945						16	
	17		3						2,110	945		3		18	
	19	20		CP-1A	2,110	2,110					LOAD BANK FAN		20	20	
	21						2,110	2,110						22	
	23		3						2,110	2,110		3		24	
	25	20		CP-1B	2,110	170					LOAD BANK CONTROL		20	26	
	27						2,110	170						28	
	29		3						2,110	170		3		30	
	31	20	1	SPARE							SPARE	1	20	32	
	33	20	1	SPARE							SPARE	1	20	34	
	35	20	1	SPARE							SPARE	1	20	36	
	37	20	1	SPARE							SPARE	1	20	38	
	39	20	1	SPARE							SPARE	1	20	40	
	41	20	1	SPARE							SPARE	1	20	42	
CONNECTED LOAD (VA)					39,760		39,760		39,760		119,280 VA				
CONNECTED LOAD (AMPERES)					144		144		144		144 A				
DEMAND LOAD (VA)					42,531		42,531		42,531		127,594 VA				
DEMAND LOAD (AMPERES)					154		154		154		154 A				
AMPERE INTERRUPT RATING					AS INDICATED BY THE FAULT CURRENT ANALYSIS										

L - PROVIDE WITH LOCKING TYPE CIRCUIT BREAKER.

STATE OF ALASKA 49TH BRETT A. BINGHAM EE-10821 5-9-18 REGISTERED PROFESSIONAL ENGINEER

Burkhart Croft ARCHITECTS LLC
880 N Street Suite 302 | Anchorage Alaska 99501
T: 907.929.9334 | www.burkhart-croft.com

HZA ENGINEERING SOLUTIONS
HZA Engineering, LLC
113 W. Northern Lights Blvd., Suite 240
Anchorage, Alaska 99503
Tel. (907) 562-1012 Fax (907) 562-1013
AK Corporation # AEL1581

MATANUSKA-SUSITNA BOROUGH

MSB FIRE STATION 6-2

WASILLA, ALASKA

DATE: 5/9/2018

DRAWN: DJL

CHECKED: BAB

PROJECT: 2017.064.0

DRAWING TITLE: PANEL SCHEDULES

REVISIONS:

SHEET NO:

E5.2

PANEL LA SCHEDULE

225A MLO

120/208V,3PH,4W

	CKT	AMP	POLE	LOAD DESCRIPTION	PHASE A VA	PHASE B VA	PHASE C VA	LOAD DESCRIPTION	POLE	AMP	CKT	
	1	30	1	REC-30A GEN USE BAY 161 N	2,400 1,180			OVERHEAD DOOR GEN BAY A E	1	20	2	
	3	20	1	REC-GEN BAY 161 WEST NORTH		1,080 1,180		OVERHEAD DOOR GEN BAY B E	1	20	4	
	5	20	1	REC-GEN BAY 161 NORTHWEST			1,080 530	GUH-5	1	20	6	
	7	20	1	REC-GEN BAY 161 NORTH	1,080 530			GUH-6	1	20	8	
	9	20	1	REC-GEN BAY 161 NORTH EAST		720 900		HEATTRACE RAINLEADER GEN BAY	1	20	10	G
	11	20	1	REC-GEN BAY 161 EAST NORTH			1,260 900	HEATTRACE RAINLEADER GEN BAY	1	20	12	G
	13	20	1	CF-1 (2), EF-15	750 200			CO2,NO2	1	20	14	
G	15	20	1	HEATTRACE SCUPPER		250 900		REC-MEZZANINE 202 EAST	1	20	16	
	17	20		JOCKEY PUMP			445 540	REC-MEZZANINE 202 WEST	1	20	18	
	19				445 360			REC-SECURED STORAGE 201 EAST	1	20	20	
	21		3			445 540		REC-SECURED STORAGE 201 WEST,UH	1	20	22	
	23	20	1	LOAD BANK HEAT			1,800 850	REC-CONTROL ROOM 301 NORTH,UH	1	20	24	
	25	20	1	SPARE	850			REC-CONTROL ROOM 301 SOUTH,CUH	1	20	26	
	27	20	1	REC-UNDER CANOPY EAST		180		SPARE	1	20	28	
	29	20	1	REC-UNDER CANOPY CENTER			180	SPARE	1	20	30	
	31	20	1	REC-UNDER CANOPY WEST	180			SPARE	1	20	32	
	33	20	1	SPARE				SPARE	1	20	34	
	35	20	1	SPARE				SPARE	1	20	36	
	37	20	1	SPARE				SPARE	1	20	38	
	39	20	1	SPARE				SPARE	1	20	40	
	41	20	1	SPARE				SPARE	1	20	42	
CONNECTED LOAD (VA)					7,975	6,195	7,585	21,755 VA				
CONNECTED LOAD (AMPERES)					66	52	63	60 A				
DEMAND LOAD (VA)					8,270	6,715	8,393	23,378 VA				
DEMAND LOAD (AMPERES)					69	56	70	65 A				
AMPERE INTERRUPT RATING								AS INDICATED BY THE FAULT CURRENT ANALYSIS				

G - PROVIDE 30mA GFEP TYPE CIRCUIT BREAKER.

PANEL LB SCHEDULE

225A MLO

120/208V,3PH,4W

	CKT	AMP	POLE	LOAD DESCRIPTION	PHASE A VA	PHASE B VA	PHASE C VA	LOAD DESCRIPTION	POLE	AMP	CKT
	1	30	1	REC-30A GEN USE BAY 161 S	2,400 840			EF-18		20	2
	3	20	1	REC-GEN USE BAY 161 WEST		720 840			2		4
	5	20	1	REC-GEN USE BAY 161 EAST			720 840	EF-19		20	6
	7	20	1	GUH-7	530 840				2		8
	9	20	1	GUH-8		530 1,500		REC-WASHER DECON 158	1	20	10
	11	20	1	REC-GEN USE BAY 161 COUNTER			360 1,515	REC-DRYER DECON 158	1	20	12
	13	20	1	CONTROL PANEL OWS-2	500 800			REC-ROOF, EF-12	1	20	14
	15	20	1	REC-GEAR STRG 156		900 735				20	16
	17	40		HOSE DRYER			3,330 735	EXTRACTOR DECON 158			18
	19		2		3,330 735				3		20
	21	30	1	HOSE WASHER		2,800 600		CF-1 (2)	1	20	22
	23	20	1	REC-TOIL 157,159 DECON 158			950 500	WATER FILL CONTROL PANEL	1	20	24
	25	20	1	REC-SCBA 160, UH-4	750			SPARE	1	20	26
	27	20	1	VF-2		1,655		SPARE	1	20	28
	29	20	1	SPARE				SPARE	1	20	30
	31	20	1	SPARE				SPARE	1	20	32
	33	20	1	SPARE				SPARE	1	20	34
	35	20	1	SPARE				SPARE	1	20	36
	37	20	1	SPARE				SPARE	1	20	38
	39	20	1	SPARE				SPARE	1	20	40
	41	20	1	SPARE				SPARE	1	20	42
CONNECTED LOAD (VA)					10,725	10,280	8,950	29,955 VA			
CONNECTED LOAD (AMPERES)					89	86	75	83 A			
DEMAND LOAD (VA)					11,558	10,694	9,783	32,034 VA			
DEMAND LOAD (AMPERES)					96	89	82	89 A			
AMPERE INTERRUPT RATING								AS INDICATED BY THE FAULT CURRENT ANALYSIS			

PANEL LC SCHEDULE

225A MLO

120/208V,3PH,4W

	CKT	AMP	POLE	LOAD DESCRIPTION	PHASE A VA	PHASE B VA	PHASE C VA	LOAD DESCRIPTION	POLE	AMP	CKT	
	1	30	1	REC-30A APP BAY 1 NORTH	2,400 865			GUH-1	1	20	2	
	3	30	1	REC-30A APP BAY 2 NORTH		2,400 865		GUH-2	1	20	4	
	5	30	1	REC-30A APP BAY 3 NORTH			2,400 1,180	OVERHEAD DOOR APP BAY 1 N	1	20	6	
	7	30	1	REC-30A APP BAY 4 NORTH	2,400 1,180			OVERHEAD DOOR APP BAY 2 N	1	20	8	
	9	20	1	REC-APP BAY 114 WEST		1,080 1,180		OVERHEAD DOOR APP BAY 3N	1	20	10	
	11	20	1	REC-APP BAY 114 WEST NORTH			900 360	REC-APP BAY 114 WRK BENCH	1	20	12	
	13	20	1	REC-APP BAY 114 NORTHWEST	900 360			EF-14	1	20	14	
	15	20	1	REC-APP BAY 114 NORTHEAST		900 680		CF-1 (2), REC-ROOF	1	20	16	
	17	20	1	REC-APP BAY 114 EAST			360 840	EF-16		20	18	
	19	20	1	REC-APP BAY 114 COLUMN	720 840				2		20	
G	21	20	1	HEATTRACE RAINLEADER APP BAY 114		1,200		SPARE	1	20	22	
G	23	20	1	HEATTRACE RAINLEADER APP BAY 114			1,200 500	REC-JAN 124 COMP 124,EF-13	1	20	24	
G	25	20	1	HEATTRACE SCUPPER	250 670			REC-DECON 122 DT 123,EF3&7	1	20	26	
	27	20		REC-EXTRACTOR		735 1,500		REC-WASHER DECON	1	20	28	
	29						735 1,515	REC-DRYER DECON	1	20	30	
	31		3		735 550			REC-GEAR STORAGE 121, EF-8	1	20	32	
	33	20	1	CONTROL PANEL OWS-1		500 1,500		REC-HEADBOLT OUTLET	1	20	34	1
	35	20	1	SPARE			1,500	REC-HEADBOLT OUTLET	1	20	36	
	37	20	1	SPARE	1,500			REC-HEADBOLT OUTLET	1	20	38	1
	39	20	1	SPARE		1,500		REC-HEADBOLT OUTLET	1	20	40	
	41	20	1	SPARE			1,800	POWERED GATE	1	20	42	
	43	20	1	SPARE				SPARE	1	20	44	
	45	20	1	SPARE				SPARE	1	20	46	
	47	20	1	SPARE				SPARE	1	20	48	
	49	20	1	SPARE				SPARE	1	20	50	
	51	20	1	SPARE				SPARE	1	20	52	
	53	20	1	SPARE				SPARE	1	20	54	
CONNECTED LOAD (VA)					13,370	14,040	13,290	40,700 VA				
CONNECTED LOAD (AMPERES)					111	117	111	113 A				
DEMAND LOAD (VA)					14,024	15,306	14,260	43,590 VA				
DEMAND LOAD (AMPERES)					117	128	119	121 A				
AMPERE INTERRUPT RATING								AS INDICATED BY THE FAULT CURRENT ANALYSIS				

G - PROVIDE 30mA GFEP TYPE CIRCUIT BREAKER.

PANEL LD SCHEDULE

225A MLO

120/208V,3PH,4W

	CKT	AMP	POLE	LOAD DESCRIPTION	PHASE A VA	PHASE B VA	PHASE C VA	LOAD DESCRIPTION	POLE	AMP	CKT
	1	30	1	REC-30A APP BAY 1 CENTRAL	2,400 1,180			OVERHEAD DOOR APP BAY 1 S	1	20	2
	3	30	1	REC-30A APP BAY 2 CENTRAL		2,400 1,180		OVERHEAD DOOR APP BAY 2 S	1	20	4
	5	30	1	REC-30A APP BAY 3 CENTRAL			2,400 1,180	OVERHEAD DOOR APP BAY 3 S	1	20	6
	7	30	1	REC-30A APP BAY 4 CENTRAL	2,400 2,400			REC-30A APP BAY 1 SOUTH	1	30	8
	9	20	1	REC-APP BAY 114 WEST		1,080 2,400		REC-30A APP BAY 2 SOUTH	1	30	10
	11	20	1	REC-APP BAY 114 SOUTHWEST			900 2,400	REC-30A APP BAY 3 SOUTH	1	30	12
	13	20	1	REC-APP BAY 114 SOUTH	900 2,400			REC-30A APP BAY 4 SOUTH	1	30	14
	15	20	1	REC-APP BAY 114 SOUTHEAST		900 680		CF-1 (2) REC-ROOF	1	20	16
G	17	20	1	HEATTRACE SCUPPER			250 840	EF-17		20	18
	19	20	1	GUH-3	865 840				2		20
	21	20	1	GUH-4		865 200		CO2,NO2	1	20	22
	23	30	1	REC-HOSE WASHER			2,800 720	REC-SM TOOL WORKSHOP NORTH	1	20	24
	25	20	1	REC-HOSE STORAGE, EF-10	350 720			REC-SM TOOL WORKSHOP SOUTH	1	20	26
	27	40		REC-HOSE DRYER		3,330 1,500		REC-HEADBOLT OUTLET	1	20	28
	29		2				3,330 1,500	REC-HEADBOLT OUTLET	1	20	30
	31	20	1	SPARE	1,500			REC-HEADBOLT OUTLET	1	20	32
	33	20	1	SPARE		1,500		REC-HEADBOLT OUTLET	1	20	34
	35	20	1	SPARE			1,500	REC-HEADBOLT OUTLET	1	20	36
	37	20	1	SPARE	1,500			REC-HEADBOLT OUTLET	1	20	38
	39	20	1	SPARE				SPARE	1	20	40
	41	20	1	SPARE				SPARE	1	20	42
	43	20	1	SPARE				SPARE	1	20	44
	45	20	1	SPARE				SPARE	1	20	46
	47	20	1	SPARE				SPARE	1	20	48
	49	20	1	SPARE				SPARE	1	20	50
	51	20	1	SPARE				SPARE	1	20	52
	53	20	1	SPARE				SPARE	1	20	54
CONNECTED LOAD (VA)					17,455	16,035	17,820	51,310 VA			
CONNECTED LOAD (AMPERES)					145	134	149	143 A			
DEMAND LOAD (VA)					18,500	17,080	18,865	54,445 VA			
DEMAND LOAD (AMPERES)					154	142	157	151 A			
AMPERE INTERRUPT RATING								AS INDICATED BY THE FAULT CURRENT ANALYSIS			

G - PROVIDE WITH 30mA GFEP TYPE CIRCUIT BREAKER.

PANEL LE SCHEDULE

225A MLO

PROVIDE WITH FEED THROUGH LUGS 120/208V,3PH,4W

	CKT	AMP	POLE	LOAD DESCRIPTION	PHASE A VA	PHASE B VA	PHASE C VA	LOAD DESCRIPTION	POLE	AMP	CKT		
A	1	20	1	REC-DORM 130	900 900			REC-DORM 131	1	20	2	A	
A	3	20	1	REC-DORM 129		1,080 1,080		REC-DORM 132	1	20	4	A	
A	5	20	1	REC-DORM 128			900 900	REC-DORM 133	1	20	6	A	
A	7	20	1	REC-DORM 127	1,080 1,080			REC-DORM 134	1	20	8	A	
A	9	20	1	REC-DORM 126		900 900		REC-DORM 135	1	20	10	A	
A	11	20	1	REC-DORM 125			1,080 1,080	REC-DORM 136	1	20	12	A	
A	13	20	1	REC-STORAGE 145	720 720			REC-DAY ROOM SOUTH	1	20	14	A	
A	15	20	1	REC-DAY ROOM NORTH		720 720		REC-DAY ROOM TVS	1	20	16	A	
	17	20	1	REC-TOILET 138, EF			220 360	REC-EXTERIOR NORTH RESIDENTAL	1	20	18	A	
	19	20	1	REC-TOILET 139, EF	220 1,200			REC-DISHWASHER	1	20	20		
	21	20	1	REC-TOILET 142, EF		220 3,150		OVEN		40	22	L	
GP	23	20	1	REC-FRIDGE 1			800 3,150		2		24		
GP	25	20	1	REC-FRIDGE 2	800 1,180			REC-DISPOSAL	1	20	26		
GP	27	20	1	REC-FRIDGE 3		800 600		RH-1	1	20	28		
	29	20	1	REC-INSTAHOT KITCHEN			750 500	REC-RANGE	1	20	30		
	31	20	1	REC-KITCHEN COUNTER SOUTH	360 1,500			REC-MICROWAVE	1	20	32		
	33	20	1	REC-KITCHEN NORTH		720 540		REC-KITCHEN COUNTER	1	20	34		
	35	20	1	REC-KITCHEN ISLAND			360 250	HEATTRACE SCUPPER	1	20	36	GA	
LA	37	20	1	FIRE SMOKE DAMPERS	300			SPARE	1	20	38		
A	39	20	1	SPARE				SPARE	1	20	40		
A	41	20	1	SPARE				SPARE	1	20	42		
CONNECTED LOAD - PANELS LE & LF (VA)					14,510	13,840	12,240	40,590 VA					
CONNECTED LOAD (AMPERES)					121	115	102	113 A					
DEMAND LOAD - PANELS LE & LF (VA)					14,805	13,840	13,090	41,735 VA					
DEMAND LOAD (AMPERES)					123	115	109	116 A					
AMPERE INTERRUPT RATING								AS INDICATED BY THE FAULT CURRENT ANALYSIS					

A - PROVIDE COMBINATION TYPE ARC-FAULT CIRCUIT BREAKER. G - PROVIDE WITH 30mA GFEP TYPE CIRCUIT BREAKER.
L - PROVIDE WITH LOCK-OFF TYPE DEVICE. GP - PROVIDE WITH 5mA GFCI TYPE CIRCUIT BREAKER.

PANEL LF SCHEDULE

225A MLO

120/208V,3PH,4W

	CKT	AMP	POLE	LOAD DESCRIPTION	PHASE A VA	PHASE B VA	PHASE C VA	LOAD DESCRIPTION	POLE	AMP	CKT
	1	20	1	REC-WASHER	1,500			SPARE	1	20	2
	3	20	1	REC-DRYER		500		SPARE	1	20	4
	5	20	1	REC-LAUNDRY 144, EF-4			350	SPARE	1	20	6
A	7	20	1	REC-BOTTLE FILLER, FITNESS	500			SPARE	1	20	8
A	9	20	1	REC-FITNESS TVS		360		SPARE	1	20	10
A	11	20	1	REC-FITNESS DEDICATED 1			500	SPARE	1	20	12
A	13	20	1	REC-FITNESS DEDICATED 2	500			SPARE	1	20	14
A	15	20	1	REC-FITNESS DEDICATED 3		500		SPARE	1	20	16
A	17	20	1	REC-FITNESS DEDICATED 4			500	SPARE	1	20	18
A	19	20	1	REC-FITNESS DEDICATED 5	500			SPARE	1	20	20
A	21	20	1	REC-FITNESS DEDICATED 6		500		SPARE	1	20	22
A	23	20	1	REC-FITNESS NORTH			540	SPARE	1	20	24
A	25	20	1	REC-MENS LOCKER	550			SPARE	1	20	26
A	27	20	1	REC-WOMENS LOCKER		550		SPARE	1	20	28
A	29	20	1	SPARE				SPARE	1	20	30
A	31	20	1	SPARE				SPARE	1	20	32
A	33	20	1	SPARE				SPARE	1	20	34
A	35	20	1	SPARE				SPARE	1	20	36
	37	20	1	SPARE				SPARE	1	20	38
	39	20	1	SPARE				SPARE	1	20	40
	41	20	1	SPARE				SPARE	1	20	42
CONNECTED LOAD (VA)					3,550	2,410	1,890	7,850 VA			
CONNECTED LOAD (AMPERES)					30	20	16	22 A			
DEMAND LOAD (VA)					3,550	2,410	2,015	7,975 VA			
DEMAND LOAD (AMPERES)					30	20	17	22 A			
AMPERE INTERRUPT RATING								AS INDICATED BY THE FAULT CURRENT ANALYSIS			

A - PROVIDE COMBINATION TYPE ARC-FAULT CIRCUIT BREAKER.

PANEL SCHEDULE NOTES

1. PROVIDE WITH A MEANS TO DISCONNECT SIMULTANEOUSLY ALL UNGROUNDED CONDUCTORS AT THE PANELBOARD AS REQUIRED BY NEC 210.7 FOR MULTIPLE BRANCH CIRCUITS SUPPLIED TO DEVICES OR EQUIPMENT ON THE SAME YOKE OR MOUNTING STRAP.

STATE OF ALASKA 49TH BRETT A. BINGHAM EE-10821 5-9-18 REGISTERED PROFESSIONAL ENGINEER

Burkhart Croft ARCHITECTS LLC
880 N Street Suite 302 | Anchorage Alaska 99501
T: 907.929.9334 | www.burkhart-croft.com

HZA ENGINEERING SOLUTIONS
HZA Engineering, LLC
113 W. Northern Lights Blvd., Suite 240
Anchorage, Alaska 99503
Tel. (907) 562-1012 Fax (907) 562-1013
AK Corporation # AECL081

MATANUSKA-SUSITNA BOROUGH

MSB FIRE STATION 6-2

WASILLA, ALASKA

DATE: 5/9/2018
DRAWN: DJL
CHECKED: BAB
PROJECT: 2017.064.0
DRAWING TITLE: PANEL SCHEDULES
REVISIONS:
SHEET NO: E5.3

PANEL LG — SCHEDULE

225A MLO

120/208V,3PH,4W

	CKT	AMP	POLE	LOAD DESCRIPTION	PHASE A VA		PHASE B VA		PHASE C VA		LOAD DESCRIPTION	POLE	AMP	CKT	
	1	20	1	REC-HALLWAY 117, 111	1,080	180					REC-CONDENSATE PUMP	1	20	2	
	3	20	1	REC-SHREDDER WORK ROOM			750	1,200			MONUMENT SIGN READERBOARD	1	20	4	
	5	20	1	REC-WORK ROOM					900	1,500	MONUMENT SIGN BACKLIGHT	1	20	6	
	7	30	1	REC-PRINTER WORK ROOM	2,880	360					REC-SNACK BAR	1	20	8	
	9	20	1	REC-MENS 105 WOMENS 106			675	180			REC-SNACK BAR DEDICATED	1	20	10	
	11	20	1	REC-IT 113 QUAD A					360	540	REC-SNACK BAR FLOORBOX	1	20	12	
	13	20	1	REC-IT 113 QUAD B	360	500					STATION ALERT PANEL	1	20	14	
	15	20	1	REC-WORKSTATION A			720	500			DOOR ACCESS CONTROL PANEL	1	20	16	
	17	20	1	REC-WORKSTATION B					720	500	FIRE ALARM CONTROL PANEL	1	20	18	L
	19	20	1	REC-BATLN CHIEF & CAPTAIN 110	900	500					IT 1136 CAMERA EQUIPMENT	1	20	20	
	21	30	1	REC-L5-30A IT ROOM			2,400	540			REC-IT 113	1	20	22	
	23	30	1	REC-L5-30B IT ROOM					2,400		SPARE	1	20	24	
	25	20	1	REC-TRNG OFFICE 109	720						SPARE	1	20	26	
	27	20	1	REC-OFFICE 108			720				SPARE	1	20	28	
	29	20	1	REC-TRNG OFFICE 107					720		SPARE	1	20	30	
	31	20	1	REC-RECEPTION 103	900						SPARE	1	20	32	
	33	20	1	REC-VESTIBULE 101,CUH			540				SPARE	1	20	34	
	35	20		CND-1,CAC-1					1,080		SPARE	1	20	36	
	37		2		1,080						SPARE	1	20	38	
	39	20	1	SPARE							SPARE	1	20	40	
	41	20	1	SPARE							SPARE	1	20	42	
	43	20	1	SPARE							SPARE	1	20	44	
	45	20	1	SPARE							SPARE	1	20	46	
	47	20	1	SPARE							SPARE	1	20	48	
	49	20	1	SPARE							SPARE	1	20	50	
	51	20	1	SPARE							SPARE	1	20	52	
	53	20	1	SPARE							SPARE	1	20	54	
CONNECTED LOAD (VA)					9,460		8,225		8,720		26,405 VA				
CONNECTED LOAD (AMPERES)					79		69		73		73 A				
DEMAND LOAD (VA)					9,730		8,525		9,365		27,620 VA				
DEMAND LOAD (AMPERES)					81		71		78		77 A				
AMPERE INTERRUPT RATING											AS INDICATED BY THE FAULT CURRENT ANALYSIS				

G - PROVIDE WITH 30mA GFEP TYPE CIRCUIT BREAKER. L - PROVIDE WITH LOCK-OFF TYPE DEVICE.

PANEL LH — SCHEDULE

225A MLO

120/208V,3PH,4W

CKT	AMP	POLE	LOAD DESCRIPTION	PHASE A VA		PHASE B VA		PHASE C VA		LOAD DESCRIPTION	POLE	AMP	CKT	
1	20	1	REC-CLASSROOM 147	540	720					REC-FLOORBOX A CLASS 149	1	20	2	
3	20	1	REC-STORAGE 147S			180	720			REC-FLOORBOX B CLASS 149	1	20	4	
5	20	1	REC-SPEAKER SYSTEM CLASS 147					180	720	REC-FLOORBOX C CLASS 149	1	20	6	
7	20	1	REC-FLOORBOX A CLASS 147	720	720					REC-FLOORBOX D CLASS 149	1	20	8	
9	20	1	REC-FLOORBOX B CLASS 147			720	720			REC-FLOORBOX E CLASS 149	1	20	10	
11	20	1	REC-FLOORBOX PODIUM 147					360	360	REC-FLOORBOX PODIUM 149	1	20	12	
13	20	1	REC-SPEAKER SYSTEM CLASS 148	180	500					REC-VEST 154, CUH	1	20	14	
15	20	1	REC-STORAGE 148S			180	250			HEATTRACE SCUPPER LOBBY	1	20	16	G
17	20	1	REC-CLASSROOM 148					720	900	REC-PUMP ACCESS 152	1	20	18	
19	20	1	REC-FLOORBOX A CLASS 148	720	580					REC-JAN 151	1	20	20	
21	30	1	REC-FLOORBOX B CLASS 148			720	750			REC-PUMP ROOM 164	1	20	22	
23	30	1	REC-FLOORBOX C CLASS 148					720	700	REC-SUMP PUMP 164	1	20	24	
25	20	1	REC-FLOORBOX D CLASS 148	720	1,200					EXTERIOR WALL SIGNS	1	20	26	
27	20	1	REC-FLOORBOX E CLASS 148			720	600					20	28	
29	20	1	REC-FLOORBOX PODIUM 148					360	600	LIFT STATION			30	
31	20	1	REC-CLASSROOM 149	900	600						3		32	
33	20	1	REC-SPEAKER SYSTEM CLASS 149			180	500			LIFT STATION CONTROL PANEL	1	20	34	
35	20	1	REC-STORAGE 149S					180	900	REC-LOBBY	1	20	36	
37	20	1	OVERHEAD DOOR MUSEUM LOBBY	1,180						SPARE	1	20	38	
39	20	1	REC-VENDING MACHINE A			1,500				SPARE	1	20	40	
41	20	1	REC-VENDING MACHINE B					1,500		SPARE	1	20	42	
43	20	1	REC-VENDING MACHINE C	1,500						SPARE	1	20	44	
45	20	1	SPARE							SPARE	1	20	46	
47	20	1	SPARE							SPARE	1	20	48	
49	20	1	SPARE							SPARE	1	20	50	
51	20	1	SPARE							SPARE	1	20	52	
53	20	1	SPARE							SPARE	1	20	54	
CONNECTED LOAD (VA)				10,780		7,740		8,200		26,720 VA				
CONNECTED LOAD (AMPERES)				90		65		68		74 A				
DEMAND LOAD (VA)				10,930		7,953		8,375		27,258 VA				
DEMAND LOAD (AMPERES)				91		66		70		76 A				
AMPERE INTERRUPT RATING										AS INDICATED BY THE FAULT CURRENT ANALYSIS				

G - PROVIDE 30mA GFEP TYPE CIRCUIT BREAKER.

PANEL LI — SCHEDULE

225A MLO

120/208V,3PH,4W

	CKT	AMP	POLE	LOAD DESCRIPTION	PHASE A VA		PHASE B VA		PHASE C VA		LOAD DESCRIPTION	POLE	AMP	CKT
	1	20		FUEL PUMP A	720	1,660					BC-1	1	20	2
	3		2				720	1,660			BC-2	1	20	4
	5	20		FUEL PUMP B					720	1,660	BC-3	1	20	6
	7		2		720	500					B-1	1	20	8
	9	20	1	FUEL DISPENSER A			1,020	500			B-2	1	20	10
	11	20	1	FUEL DISPENSER B					1,020	500	B-3	1	20	12
	13	20	1	TRAINING EQUIPMENT A	1,000	500					MECHANICAL CONTROLS	1	20	14
	15	20	1	TRAINING EQUIPMENT B			1,000	700			EF-9	1	20	16
	17	20	1	TRAINING EQUIPMENT C					1,000	900	REC-TEACHING LAB	1	20	18
	19	20	1	CP-3	530	475					UH-6,HWCP	1	20	20
	21	20	1	CP-4			530				SPARE	1	20	22
	23	20	1	VF-1					1,180		SPARE	1	20	24
	25	20	1	REC-MECH 163	1,080						SPARE	1	20	26
G	27	20	1	HEATTRACE SCUPPER			250				SPARE	1	30	28
	29	20	1	DDC PANEL					500		SPARE	1	20	30
	31	20	1	SPARE							SPARE	1	20	32
	33	20	1	SPARE							SPARE	1	20	34
	35	20	1	SPARE							SPARE	1	20	36
	37	20	1	SPARE							SPARE	1	20	38
	39	20	1	SPARE							SPARE	1	20	40
	41	20	1	SPARE							SPARE	1	20	42
CONNECTED LOAD (VA)					7,185		6,380		7,480		21,045 VA			
CONNECTED LOAD (AMPERES)					60		53		62		58 A			
DEMAND LOAD (VA)					7,600		6,858		7,895		22,353 VA			
DEMAND LOAD (AMPERES)					63		57		66		62 A			
AMPERE INTERRUPT RATING											AS INDICATED BY THE FAULT CURRENT ANALYSIS			

G - PROVIDE 30mA GFEP TYPE CIRCUIT BREAKER.

PANEL TT — SCHEDULE

40A MCB (480 V); 60A MCB (208 V)

INTEGRAL 15kVA 480:120/208V TRANSFORMER 120/208V,3PH,4W

	CKT	AMP	POLE	LOAD DESCRIPTION	PHASE A VA		PHASE B VA		PHASE C VA		LOAD DESCRIPTION	POLE	AMP	CKT
G	1	20		TRAINING TOWER HEATTRACE	2500						SPACE	1	-	2
	3		2				2500				SPACE	1	-	4
	5	20	1	LTG/REC TRAINING TOWER					1800		SPACE	1	-	6
	7	20	1	SPARE							SPACE	1	-	8
	9	20	1	SPARE							SPACE	1	-	10
	11	-	1	SPACE							SPACE	1	-	12
	13	-	1	SPACE							SPACE	1	-	14
	15	-	1	SPACE							SPACE	1	-	16
	17	-	1	SPACE							SPACE	1	-	18
	19	-	1	SPACE							SPACE	1	-	20
	21	-	1	SPACE							SPACE	1	-	22
	23	-	1	SPACE							SPACE	1	-	24
CONNECTED LOAD (VA)					2500		2500		1800		6800 VA			
CONNECTED LOAD (AMPERES)					21		21		15		19 A			
DEMAND LOAD (VA)					3125		3125		2250		8500 VA			
DEMAND LOAD (AMPERES)					26		26		19		24 A			
AMPERE INTERRUPT RATING											AS INDICATED BY THE FAULT CURRENT ANALYSIS			

G - PROVIDE 30mA GFEP TYPE CIRCUIT BREAKER.

STATE OF ALASKA 49TH BRETT A. BINGHAM EE-10821 5-9-18 REGISTERED PROFESSIONAL ENGINEER

Burkhart Croft ARCHITECTS LLC
880 N Street Suite 302 | Anchorage Alaska 99501
T: 907.929.9334 | www.burkhart-croft.com

HZA ENGINEERING SOLUTIONS
HZA Engineering, LLC
113 W. Northern Lights Blvd., Suite 240
Anchorage, Alaska 99503
Tel. (907) 562-1012 Fax (907) 562-1013
AK Corporation # AECL081

MATANUSKA-SUSITNA BOROUGH

MSB FIRE STATION 6-2

WASILLA, ALASKA

DATE: 5/9/2018

DRAWN: DJL

CHECKED: BAB

PROJECT: 2017.064.0

DRAWING TITLE: PANEL SCHEDULES

REVISIONS:

SHEET NO:

E5.4